YosysHQ Yosys

Version 0.52

YosysHQ GmbH

May 04, 2025

CONTENTS

1 What is Yosys **13**
- 1.1 What you can do with Yosys . . . 13
  - 1.1.1 Typical applications for Yosys . . . 14
  - 1.1.2 Things you can't do . . . 14
- 1.2 The Yosys family . . . 14
- 1.3 The original thesis abstract . . . 15
  - 1.3.1 Benefits of open source HDL synthesis . . . 16
  - 1.3.2 History of Yosys . . . 16

2 Getting started with Yosys **19**
- 2.1 Installation . . . 19
  - 2.1.1 CAD suite(s) . . . 19
  - 2.1.2 Building from source . . . 20
  - 2.1.3 Source tree and build system . . . 22
- 2.2 Synthesis starter . . . 23
  - 2.2.1 Demo design . . . 23
  - 2.2.2 Loading the design . . . 25
  - 2.2.3 Elaboration . . . 25
  - 2.2.4 Flattening . . . 31
  - 2.2.5 The coarse-grain representation . . . 32
  - 2.2.6 Hardware mapping . . . 39
  - 2.2.7 Final steps . . . 46
- 2.3 Scripting in Yosys . . . 48
  - 2.3.1 Script parsing . . . 49
  - 2.3.2 The synthesis starter script . . . 49

3 Using Yosys (advanced) **55**
- 3.1 Synthesis in detail . . . 55
  - 3.1.1 Synth commands . . . 55
  - 3.1.2 Converting process blocks . . . 57
  - 3.1.3 FSM handling . . . 60
  - 3.1.4 Memory handling . . . 62
  - 3.1.5 Optimization passes . . . 77
  - 3.1.6 Technology mapping . . . 83
  - 3.1.7 The extract pass . . . 85
  - 3.1.8 The ABC toolbox . . . 98
  - 3.1.9 Mapping to cell libraries . . . 101
- 3.2 More scripting . . . 105
  - 3.2.1 Loading a design . . . 106
  - 3.2.2 Selections . . . 107

3.2.3 Interactive design investigation . . . 119
3.2.4 Symbolic model checking . . . 137

4 Yosys internals **143**
4.1 Internal flow . . . 143
4.1.1 Flow overview . . . 143
4.1.2 Control and data flow . . . 144
4.1.3 The Verilog and AST frontends . . . 146
4.2 Internal formats . . . 155
4.2.1 The RTL Intermediate Language (RTLIL) . . . 156
4.3 Working with the Yosys codebase . . . 162
4.3.1 Writing extensions . . . 162
4.3.2 Compiling with Verific library . . . 171
4.3.3 Writing a new backend using FunctionalIR . . . 173
4.3.4 Contributing to Yosys . . . 186
4.3.5 Testing Yosys . . . 187
4.4 Techmap by example . . . 187
4.4.1 Mapping OR3X1 . . . 188
4.4.2 Conditional techmap . . . 189
4.4.3 Scripting in map modules . . . 191
4.4.4 Handling constant inputs . . . 192
4.4.5 Handling shorted inputs . . . 194
4.4.6 Notes on using techmap . . . 195
4.5 Notes on Verilog support in Yosys . . . 196
4.5.1 Unsupported Verilog-2005 Features . . . 196
4.5.2 Verilog Attributes and non-standard features . . . 196
4.5.3 Non-standard or SystemVerilog features for formal verification . . . 200
4.5.4 Supported features from SystemVerilog . . . 200
4.6 Hashing and associative data structures in Yosys . . . 201
4.6.1 Container classes based on hashing . . . 201
4.6.2 The hash function . . . 202
4.6.3 Making a type hashable . . . 202
4.6.4 Porting plugins from the legacy interface . . . 203

5 A primer on digital circuit synthesis **205**
5.1 Levels of abstraction . . . 205
5.1.1 System level . . . 206
5.1.2 High level . . . 206
5.1.3 Behavioural level . . . 206
5.1.4 Register-Transfer Level (RTL) . . . 207
5.1.5 Logical gate level . . . 207
5.1.6 Physical gate level . . . 208
5.1.7 Switch level . . . 208
5.1.8 Yosys . . . 208
5.2 Features of synthesizable Verilog . . . 208
5.2.1 Structural Verilog . . . 208
5.2.2 Expressions in Verilog . . . 209
5.2.3 Behavioural modelling . . . 209
5.2.4 Functions and tasks . . . 210
5.2.5 Conditionals, loops and generate-statements . . . 210
5.2.6 Arrays and memories . . . 210
5.3 Challenges in digital circuit synthesis . . . 211
5.3.1 Standards compliance . . . 211
5.3.2 Optimizations . . . 211

5.3.3 Technology mapping . . . 212
5.4 Script-based synthesis flows . . . 212
5.5 Methods from compiler design . . . 213
5.5.1 Lexing and parsing . . . 213
5.5.2 Multi-pass compilation . . . 214
5.5.3 Static Single Assignment (SSA) form . . . 215

6 RTLIL text representation **217**
6.1 Lexical elements . . . 217
6.1.1 Characters . . . 217
6.1.2 Identifiers . . . 217
6.1.3 Values . . . 217
6.1.4 Strings . . . 218
6.1.5 Comments . . . 218
6.2 File . . . 218
6.2.1 Autoindex statements . . . 218
6.2.2 Modules . . . 219
6.2.3 Attribute statements . . . 219
6.2.4 Signal specifications . . . 219
6.2.5 Connections . . . 219
6.2.6 Wires . . . 219
6.2.7 Memories . . . 220
6.2.8 Cells . . . 220
6.2.9 Processes . . . 220
6.2.10 Switches . . . 220
6.2.11 Syncs . . . 221

7 Auxiliary libraries **223**
7.1 BigInt . . . 223
7.2 dlfcn-win32 . . . 223
7.3 ezSAT . . . 223
7.4 fst . . . 223
7.5 json11 . . . 223
7.6 MiniSAT . . . 224
7.7 SHA1 . . . 224
7.8 SubCircuit . . . 224

8 Auxiliary programs **225**
8.1 yosys-config . . . 225
8.2 yosys-filterlib . . . 226
8.3 yosys-abc . . . 226
8.4 yosys-smtbmc . . . 227
8.5 yosys-witness . . . 230

9 Internal cell library **233**
9.1 Word-level cells . . . 233
9.1.1 Unary operators . . . 233
9.1.2 Binary operators . . . 239
9.1.3 Multiplexers . . . 259
9.1.4 Registers . . . 263
9.1.5 Memories . . . 273
9.1.6 Finite state machines . . . 285
9.1.7 Coarse arithmetics . . . 287
9.1.8 Arbitrary logic functions . . . 295
9.1.9 Specify rules . . . 297

9.1.10 Formal verification cells . . . 302
9.1.11 Debugging cells . . . 308
9.1.12 Wire cells . . . 311
9.2 Gate-level cells . . . 312
9.2.1 Combinatorial cells (simple) . . . 313
9.2.2 Combinatorial cells (combined) . . . 317
9.2.3 Flip-flop cells . . . 323
9.2.4 Latch cells . . . 377
9.2.5 Other gate-level cells . . . 389
9.3 Cell properties . . . 390

10 Command line reference **391**
10.1 Yosys environment variables . . . 392
10.2 abc - use ABC for technology mapping . . . 393
10.3 abc9 - use ABC9 for technology mapping . . . 396
10.4 abc9_exe - use ABC9 for technology mapping . . . 399
10.5 abc9_ops - helper functions for ABC9 . . . 401
10.6 abc_new - (experimental) use ABC for SC technology mapping (new) . . . 403
10.7 abstract - replace signals with abstract values during formal verification . . . 404
10.8 add - add objects to the design . . . 405
10.9 aigmap - map logic to and-inverter-graph circuit . . . 406
10.10 alumacc - extract ALU and MACC cells . . . 406
10.11 anlogic_eqn - Anlogic: Calculate equations for luts . . . 406
10.12 anlogic_fixcarry - Anlogic: fix carry chain . . . 407
10.13 assertpmux - adds asserts for parallel muxes . . . 407
10.14 async2sync - convert async FF inputs to sync circuits . . . 407
10.15 attrmap - renaming attributes . . . 407
10.16 attrmvcp - move or copy attributes from wires to driving cells . . . 408
10.17 autoname - automatically assign names to objects . . . 409
10.18 blackbox - convert modules into blackbox modules . . . 409
10.19 bmuxmap - transform $bmux cells to trees of $mux cells . . . 409
10.20 booth - map $mul cells to Booth multipliers . . . 409
10.21 box_derive - derive box modules . . . 410
10.22 bufnorm - (experimental) convert design into buffered-normalized form . . . 410
10.23 bugpoint - minimize testcases . . . 412
10.24 bwmuxmap - replace $bwmux cells with equivalent logic . . . 413
10.25 cd - a shortcut for 'select -module <name>' . . . 413
10.26 cellmatch - match cells to their targets in cell library . . . 414
10.27 check - check for obvious problems in the design . . . 414
10.28 chformal - change formal constraints of the design . . . 415
10.29 chparam - re-evaluate modules with new parameters . . . 416
10.30 chtype - change type of cells in the design . . . 416
10.31 clean - remove unused cells and wires . . . 416
10.32 clean_zerowidth - clean zero-width connections from the design . . . 417
10.33 clk2fflogic - convert clocked FFs to generic $ff cells . . . 417
10.34 clkbufmap - insert clock buffers on clock networks . . . 417
10.35 clockgate - extract clock gating out of flip flops . . . 418
10.36 connect - create or remove connections . . . 419
10.37 connect_rpc - connect to RPC frontend . . . 419
10.38 connwrappers - match width of input-output port pairs . . . 420
10.39 coolrunner2_fixup - insert necessary buffer cells for CoolRunner-II architecture . . . 421
10.40 coolrunner2_sop - break $sop cells into ANDTERM/ORTERM cells . . . 421
10.41 copy - copy modules in the design . . . 421
10.42 cover - print code coverage counters . . . 421

10.43 cutpoint - adds formal cut points to the design . . . 422
10.44 debug - run command with debug log messages enabled . . . 422
10.45 delete - delete objects in the design . . . 423
10.46 deminout - demote inout ports to input or output . . . 423
10.47 demuxmap - transform $demux cells to $eq + $mux cells . . . 423
10.48 design - save, restore and reset current design . . . 423
10.49 dffinit - set INIT param on FF cells . . . 425
10.50 dfflegalize - convert FFs to types supported by the target . . . 425
10.51 dfflibmap - technology mapping of flip-flops . . . 426
10.52 dffunmap - unmap clock enable and synchronous reset from FFs . . . 427
10.53 dft_tag - create tagging logic for data flow tracking . . . 427
10.54 dump - print parts of the design in RTLIL format . . . 428
10.55 echo - turning echoing back of commands on and off . . . 428
10.56 edgetypes - list all types of edges in selection . . . 428
10.57 efinix_fixcarry - Efinix: fix carry chain . . . 429
10.58 equiv_add - add a $equiv cell . . . 429
10.59 equiv_induct - proving $equiv cells using temporal induction . . . 429
10.60 equiv_make - prepare a circuit for equivalence checking . . . 430
10.61 equiv_mark - mark equivalence checking regions . . . 430
10.62 equiv_miter - extract miter from equiv circuit . . . 430
10.63 equiv_opt - prove equivalence for optimized circuit . . . 431
10.64 equiv_purge - purge equivalence checking module . . . 432
10.65 equiv_remove - remove $equiv cells . . . 432
10.66 equiv_simple - try proving simple $equiv instances . . . 433
10.67 equiv_status - print status of equivalent checking module . . . 433
10.68 equiv_struct - structural equivalence checking . . . 433
10.69 eval - evaluate the circuit given an input . . . 434
10.70 example_dt - drivertools example . . . 434
10.71 exec - execute commands in the operating system shell . . . 435
10.72 expose - convert internal signals to module ports . . . 435
10.73 extract - find subcircuits and replace them with cells . . . 436
10.74 extract_counter - Extract GreenPak4 counter cells . . . 438
10.75 extract_fa - find and extract full/half adders . . . 438
10.76 extract_reduce - converts gate chains into $reduce_* cells . . . 439
10.77 extractinv - extract explicit inverter cells for invertible cell pins . . . 439
10.78 flatten - flatten design . . . 439
10.79 flowmap - pack LUTs with FlowMap . . . 440
10.80 fmcombine - combine two instances of a cell into one . . . 441
10.81 fminit - set init values/sequences for formal . . . 442
10.82 formalff - prepare FFs for formal . . . 442
10.83 freduce - perform functional reduction . . . 443
10.84 fsm - extract and optimize finite state machines . . . 444
10.85 fsm_detect - finding FSMs in design . . . 444
10.86 fsm_expand - expand FSM cells by merging logic into it . . . 445
10.87 fsm_export - exporting FSMs to KISS2 files . . . 445
10.88 fsm_extract - extracting FSMs in design . . . 446
10.89 fsm_info - print information on finite state machines . . . 446
10.90 fsm_map - mapping FSMs to basic logic . . . 446
10.91 fsm_opt - optimize finite state machines . . . 446
10.92 fsm_recode - recoding finite state machines . . . 446
10.93 fst2tb - generate testbench out of fst file . . . 447
10.94 future - resolve future sampled value functions . . . 448
10.95 gatemate_foldinv - fold inverters into Gatemate LUT trees . . . 448
10.96 glift - create GLIFT models and optimization problems . . . 448

10.97 greenpak4_dffinv - merge greenpak4 inverters and DFF/latches . . . 450
10.98 help - display help messages . . . 450
10.99 hierarchy - check, expand and clean up design hierarchy . . . 450
10.100 hilomap - technology mapping of constant hi- and/or lo-drivers . . . 452
10.101 history - show last interactive commands . . . 452
10.102 ice40_braminit - iCE40: perform SB_RAM40_4K initialization from file . . . 452
10.103 ice40_dsp - iCE40: map multipliers . . . 453
10.104 ice40_opt - iCE40: perform simple optimizations . . . 453
10.105 ice40_wrapcarry - iCE40: wrap carries . . . 453
10.106 insbuf - insert buffer cells for connected wires . . . 454
10.107 internal_stats - print internal statistics . . . 454
10.108 iopadmap - technology mapping of i/o pads (or buffers) . . . 454
10.109 jny - write design and metadata . . . 455
10.110 json - write design in JSON format . . . 455
10.111 keep_hierarchy - selectively add the keep_hierarchy attribute . . . 456
10.112 lattice_gsr - Lattice: handle GSR . . . 456
10.113 libcache - control caching of technology library data parsed from liberty files . . . 457
10.114 license - print license terms . . . 457
10.115 log - print text and log files . . . 458
10.116 logger - set logger properties . . . 458
10.117 ls - list modules or objects in modules . . . 459
10.118 ltp - print longest topological path . . . 459
10.119 lut2mux - convert $lut to $_MUX_ . . . 460
10.120 maccmap - mapping macc cells . . . 460
10.121 memory - translate memories to basic cells . . . 460
10.122 memory_bmux2rom - convert muxes to ROMs . . . 460
10.123 memory_bram - map memories to block rams . . . 461
10.124 memory_collect - creating multi-port memory cells . . . 463
10.125 memory_dff - merge input/output DFFs into memory read ports . . . 463
10.126 memory_libmap - map memories to cells . . . 463
10.127 memory_map - translate multiport memories to basic cells . . . 464
10.128 memory_memx - emulate vlog sim behavior for mem ports . . . 464
10.129 memory_narrow - split up wide memory ports . . . 465
10.130 memory_nordff - extract read port FFs from memories . . . 465
10.131 memory_share - consolidate memory ports . . . 465
10.132 memory_unpack - unpack multi-port memory cells . . . 465
10.133 microchip_dffopt - MICROCHIP: optimize FF control signal usage . . . 466
10.134 microchip_dsp - MICROCHIP: pack resources into DSPs . . . 466
10.135 miter - automatically create a miter circuit . . . 466
10.136 mutate - generate or apply design mutations . . . 467
10.137 muxcover - cover trees of MUX cells with wider MUXes . . . 469
10.138 muxpack - $mux/$pmux cascades to $pmux . . . 469
10.139 nlutmap - map to LUTs of different sizes . . . 470
10.140 nx_carry - NanoXplore: create carry cells . . . 470
10.141 onehot - optimize $eq cells for onehot signals . . . 470
10.142 opt - perform simple optimizations . . . 470
10.143 opt_clean - remove unused cells and wires . . . 471
10.144 opt_demorgan - Optimize reductions with DeMorgan equivalents . . . 471
10.145 opt_dff - perform DFF optimizations . . . 472
10.146 opt_expr - perform const folding and simple expression rewriting . . . 472
10.147 opt_ffinv - push inverters through FFs . . . 473
10.148 opt_lut - optimize LUT cells . . . 473
10.149 opt_lut_ins - discard unused LUT inputs . . . 473
10.150 opt_mem - optimize memories . . . 474

10.151opt_mem_feedback - convert memory read-to-write port feedback paths to write enables . . 474
10.152opt_mem_priority - remove priority relations between write ports that can never collide . . 474
10.153opt_mem_widen - optimize memories where all ports are wide 475
10.154opt_merge - consolidate identical cells 475
10.155opt_muxtree - eliminate dead trees in multiplexer trees 475
10.156opt_reduce - simplify large MUXes and AND/OR gates 475
10.157opt_share - merge mutually exclusive cells of the same type that share an input signal . . . 476
10.158paramap - renaming cell parameters 476
10.159peepopt - collection of peephole optimizers 477
10.160plugin - load and list loaded plugins 477
10.161pmux2shiftx - transform $pmux cells to $shiftx cells 478
10.162pmuxtree - transform $pmux cells to trees of $mux cells 478
10.163portarcs - derive port arcs for propagation delay 478
10.164portlist - list (top-level) ports 479
10.165prep - generic synthesis script 479
10.166printattrs - print attributes of selected objects 480
10.167proc - translate processes to netlists 481
10.168proc_arst - detect asynchronous resets 481
10.169proc_clean - remove empty parts of processes 482
10.170proc_dff - extract flip-flops from processes 482
10.171proc_dlatch - extract latches from processes 482
10.172proc_init - convert initial block to init attributes 482
10.173proc_memwr - extract memory writes from processes 483
10.174proc_mux - convert decision trees to multiplexers 483
10.175proc_prune - remove redundant assignments 483
10.176proc_rmdead - eliminate dead trees in decision trees 483
10.177proc_rom - convert switches to ROMs 483
10.178qbfsat - solve a 2QBF-SAT problem in the circuit 484
10.179ql_bram_merge - Infers QuickLogic k6n10f BRAM pairs that can operate independently . . 485
10.180ql_bram_types - Change TDP36K type to subtypes 485
10.181ql_dsp_io_regs - change types of QL_DSP2 depending on configuration 485
10.182ql_dsp_macc - infer QuickLogic multiplier-accumulator DSP cells 486
10.183ql_dsp_simd - merge QuickLogic K6N10f DSP pairs to operate in SIMD mode 486
10.184ql_ioff - Infer I/O FFs for qlf_k6n10f architecture 486
10.185read - load HDL designs 486
10.186read_aiger - read AIGER file 487
10.187read_blif - read BLIF file 488
10.188read_json - read JSON file 488
10.189read_liberty - read cells from liberty file 488
10.190read_rtlil - read modules from RTLIL file 489
10.191read_verilog - read modules from Verilog file 490
10.192read_verilog_file_list - parse a Verilog file list 493
10.193read_xaiger2 - (experimental) read XAIGER file 493
10.194recover_names - Execute a lossy mapping command and recover original netnames 494
10.195rename - rename object in the design 494
10.196rmports - remove module ports with no connections 495
10.197sat - solve a SAT problem in the circuit 495
10.198scatter - add additional intermediate nets 499
10.199scc - detect strongly connected components (logic loops) 499
10.200scratchpad - get/set values in the scratchpad 500
10.201script - execute commands from file or wire 500
10.202select - modify and view the list of selected objects 501
10.203setattr - set/unset attributes on objects 505
10.204setenv - set an environment variable 506

10.205 setparam - set/unset parameters on objects . . . 506
10.206 setundef - replace undef values with defined constants . . . 506
10.207 share - perform sat-based resource sharing . . . 507
10.208 shell - enter interactive command mode . . . 507
10.209 show - generate schematics using graphviz . . . 508
10.210 shregmap - map shift registers . . . 510
10.211 sim - simulate the circuit . . . 511
10.212 simplemap - mapping simple coarse-grain cells . . . 513
10.213 splice - create explicit splicing cells . . . 514
10.214 splitcells - split up multi-bit cells . . . 514
10.215 splitnets - split up multi-bit nets . . . 515
10.216 sta - perform static timing analysis . . . 515
10.217 stat - print some statistics . . . 515
10.218 submod - moving part of a module to a new submodule . . . 516
10.219 supercover - add hi/lo cover cells for each wire bit . . . 517
10.220 synth - generic synthesis script . . . 517
10.221 synth_achronix - synthesis for Achronix Speedster22i FPGAs. . . . 519
10.222 synth_anlogic - synthesis for Anlogic FPGAs . . . 520
10.223 synth_coolrunner2 - synthesis for Xilinx Coolrunner-II CPLDs . . . 522
10.224 synth_easic - synthesis for eASIC platform . . . 524
10.225 synth_ecp5 - synthesis for ECP5 FPGAs . . . 525
10.226 synth_efinix - synthesis for Efinix FPGAs . . . 529
10.227 synth_fabulous - FABulous synthesis script . . . 530
10.228 synth_gatemate - synthesis for Cologne Chip GateMate FPGAs . . . 534
10.229 synth_gowin - synthesis for Gowin FPGAs . . . 537
10.230 synth_greenpak4 - synthesis for GreenPAK4 FPGAs . . . 539
10.231 synth_ice40 - synthesis for iCE40 FPGAs . . . 541
10.232 synth_intel - synthesis for Intel (Altera) FPGAs. . . . 544
10.233 synth_intel_alm - synthesis for ALM-based Intel (Altera) FPGAs. . . . 547
10.234 synth_lattice - synthesis for Lattice FPGAs . . . 549
10.235 synth_microchip - synthesis for Microchip FPGAs . . . 553
10.236 synth_nanoxplore - synthesis for NanoXplore FPGAs . . . 556
10.237 synth_nexus - synthesis for Lattice Nexus FPGAs . . . 559
10.238 synth_quicklogic - Synthesis for QuickLogic FPGAs . . . 562
10.239 synth_sf2 - synthesis for SmartFusion2 and IGLOO2 FPGAs . . . 565
10.240 synth_xilinx - synthesis for Xilinx FPGAs . . . 567
10.241 synthprop - synthesize SVA properties . . . 571
10.242 tcl - execute a TCL script file . . . 571
10.243 techmap - generic technology mapper . . . 572
10.244 tee - redirect command output to file . . . 575
10.245 test_abcloop - automatically test handling of loops in abc command . . . 575
10.246 test_autotb - generate simple test benches . . . 576
10.247 test_cell - automatically test the implementation of a cell type . . . 576
10.248 test_generic - test the generic compute graph . . . 578
10.249 test_pmgen - test pass for pmgen . . . 578
10.250 torder - print cells in topological order . . . 578
10.251 trace - redirect command output to file . . . 579
10.252 tribuf - infer tri-state buffers . . . 579
10.253 uniquify - create unique copies of modules . . . 579
10.254 verific - load Verilog and VHDL designs using Verific . . . 580
10.255 verilog_defaults - set default options for read_verilog . . . 582
10.256 verilog_defines - define and undefine verilog defines . . . 582
10.257 viz - visualize data flow graph . . . 583
10.258 wbflip - flip the whitebox attribute . . . 584

10.259 wrapcell - wrap individual cells into new modules . . . 584
10.260 wreduce - reduce the word size of operations if possible . . . 585
10.261 write_aiger - write design to AIGER file . . . 585
10.262 write_aiger2 - (experimental) write design to AIGER file . . . 586
10.263 write_blif - write design to BLIF file . . . 586
10.264 write_btor - write design to BTOR file . . . 588
10.265 write_cxxrtl - convert design to C++ RTL simulation . . . 588
10.266 write_edif - write design to EDIF netlist file . . . 593
10.267 write_file - write a text to a file . . . 594
10.268 write_firrtl - write design to a FIRRTL file . . . 594
10.269 write_functional_cxx - convert design to C++ using the functional backend . . . 594
10.270 write_functional_rosette - Generate Rosette compatible Racket from Functional IR . . . 595
10.271 write_functional_smt2 - Generate SMT-LIB from Functional IR . . . 595
10.272 write_intersynth - write design to InterSynth netlist file . . . 595
10.273 write_jny - generate design metadata . . . 595
10.274 write_json - write design to a JSON file . . . 596
10.275 write_rtlil - write design to RTLIL file . . . 601
10.276 write_simplec - convert design to simple C code . . . 601
10.277 write_smt2 - write design to SMT-LIBv2 file . . . 602
10.278 write_smv - write design to SMV file . . . 605
10.279 write_spice - write design to SPICE netlist file . . . 605
10.280 write_table - write design as connectivity table . . . 606
10.281 write_verilog - write design to Verilog file . . . 606
10.282 write_xaiger - write design to XAIGER file . . . 608
10.283 write_xaiger2 - (experimental) write module to XAIGER file . . . 608
10.284 xilinx_dffopt - Xilinx: optimize FF control signal usage . . . 609
10.285 xilinx_dsp - Xilinx: pack resources into DSPs . . . 609
10.286 xilinx_srl - Xilinx shift register extraction . . . 610
10.287 xprop - formal x propagation . . . 610
10.288 zinit - add inverters so all FF are zero-initialized . . . 611

Bibliography **613**

Property Index **615**

Internal cell reference **617**

Command Reference **621**

Tag Index **625**

Yosys is an open source framework for RTL synthesis. To learn more about Yosys, see *What is Yosys*. For a quick guide on how to get started using Yosys, check out *Getting started with Yosys*. For the complete list of commands available, go to commandindex.

Todo

look into command ref improvements

- Search bar with live drop down suggestions for matching on title / autocompleting commands
- Scroll the left sidebar to the current location on page load
- Also the formatting in pdf uses link formatting instead of code formatting

Todo

how does a filterlib rules-file work?

(The original entry is located in /build/reproducible-path/yosys-0.52/docs/source/appendix/auxprogs.rst, line 22.)

Todo

see if we can get the two hanging appnotes as lit references

(The original entry is located in /build/reproducible-path/yosys-0.52/docs/source/bib.rst, line 10.)

Todo

flip-flops with async load, `$_ALDFFE?_[NP]{2,3}_`

(The original entry is located in /build/reproducible-path/yosys-0.52/docs/source/cell/gate_reg_ff.rst, line 226.)

Todo

Add information about *$alu*, *$fa*, *$macc_v2*, and *$lcu* cells.

(The original entry is located in /build/reproducible-path/yosys-0.52/docs/source/cell/word_arith.rst, line 4.)

Todo

Describe formal cells

$check, *$assert*, *$assume*, *$live*, *$fair*, *$cover*, *$equiv*, *$initstate*, *$anyconst*, *$anyseq*, *$anyinit*, *$allconst*, and *$allseq*.

Also *$ff* and *$_FF_* cells.

(The original entry is located in /build/reproducible-path/yosys-0.52/docs/source/cell/word_formal.rst, line 13.)

Todo

Describe *$fsm* cell

(The original entry is located in /build/reproducible-path/yosys-0.52/docs/source/cell/word_fsm.rst, line 4.)

Todo

$specify2, *$specify3*, and *$specrule* cells.

(The original entry is located in /build/reproducible-path/yosys-0.52/docs/source/cell/word_spec.rst, line 4.)

Todo

Add information about *$slice* and *$concat* cells.

(The original entry is located in /build/reproducible-path/yosys-0.52/docs/source/cell/word_wire.rst, line 4.)

Todo

reconsider including the whole (~77 line) design like this

(The original entry is located in /build/reproducible-path/yosys-0.52/docs/source/getting_started/example_synth.rst, line 23.)

Todo

fifo.v description

(The original entry is located in /build/reproducible-path/yosys-0.52/docs/source/getting_started/example_synth.rst, line 31.)

Todo

consider a brief glossary for terms like adff

(The original entry is located in /build/reproducible-path/yosys-0.52/docs/source/getting_started/example_synth.rst, line 199.)

Todo

hierarchy failure modes

(The original entry is located in /build/reproducible-path/yosys-0.52/docs/source/getting_started/example_synth.rst, line 237.)

Todo

pending bugfix in *wreduce* and/or *opt_clean*

(The original entry is located in /build/reproducible-path/yosys-0.52/docs/source/getting_started/example_synth.rst, line 427.)

Todo

`ice40_dsp` is pmgen

(The original entry is located in /build/reproducible-path/yosys-0.52/docs/source/getting_started/example_synth.rst, line 501.)

Todo

look into command ref improvements

- Search bar with live drop down suggestions for matching on title / autocompleting commands
- Scroll the left sidebar to the current location on page load
- Also the formatting in pdf uses link formatting instead of code formatting

(The original entry is located in /build/reproducible-path/yosys-0.52/docs/source/index.rst, line 10.)

Todo

nextpnr for FPGAs, consider mentioning openlane, vpr, coriolis

(The original entry is located in /build/reproducible-path/yosys-0.52/docs/source/introduction.rst, line 76.)

Todo

Consider a less academic version of the History of Yosys

(The original entry is located in /build/reproducible-path/yosys-0.52/docs/source/introduction.rst, line 206.)

Todo

brief overview for the more scripting index

(The original entry is located in /build/reproducible-path/yosys-0.52/docs/source/using_yosys/more_scripting/index.rst, line 4.)

Todo

troubleshooting document(?)

(The original entry is located in /build/reproducible-path/yosys-0.52/docs/source/using_yosys/more_scripting/index.rst, line 6.)

Todo

interactive design opening text

(The original entry is located in /build/reproducible-path/yosys-0.52/docs/source/using_yosys/more_scripting/interactive_i line 4.)

Todo

merge into *Scripting in Yosys* show section

(The original entry is located in /build/reproducible-path/yosys-0.52/docs/source/using_yosys/more_scripting/interactive_i line 14.)

Todo

replace inline code

(The original entry is located in /build/reproducible-path/yosys-0.52/docs/source/using_yosys/more_scripting/interactive_i line 363.)

Todo

replace inline code

(The original entry is located in /build/reproducible-path/yosys-0.52/docs/source/using_yosys/more_scripting/interactive_i line 395.)

Todo

replace inline code

(The original entry is located in /build/reproducible-path/yosys-0.52/docs/source/using_yosys/more_scripting/interactive_i line 483.)

Todo

replace inline code

(The original entry is located in /build/reproducible-path/yosys-0.52/docs/source/using_yosys/more_scripting/interactive_i line 553.)

Todo

replace inline code

(The original entry is located in /build/reproducible-path/yosys-0.52/docs/source/using_yosys/more_scripting/interactive_i line 597.)

Todo

replace inline code

(The original entry is located in /build/reproducible-path/yosys-0.52/docs/source/using_yosys/more_scripting/interactive_i line 643.)

Todo

replace inline code?

(The original entry is located in /build/reproducible-path/yosys-0.52/docs/source/using_yosys/more_scripting/interactive_i line 696.)

Todo

replace inline code

(The original entry is located in /build/reproducible-path/yosys-0.52/docs/source/using_yosys/more_scripting/interactive_i line 721.)

Todo

include `read_verilog <<EOF`, also other methods of loading designs

(The original entry is located in /build/reproducible-path/yosys-0.52/docs/source/using_yosys/more_scripting/load_design. line 8.)

Todo

more info on other `read_*` commands, also is this the first time we mention verific?

(The original entry is located in /build/reproducible-path/yosys-0.52/docs/source/using_yosys/more_scripting/load_design.
line 27.)

Todo

check text context

(The original entry is located in /build/reproducible-path/yosys-0.52/docs/source/using_yosys/more_scripting/model_check
line 4.)

Todo

add/expand supporting text

(The original entry is located in /build/reproducible-path/yosys-0.52/docs/source/using_yosys/more_scripting/model_check
line 25.)

Todo

replace inline code

(The original entry is located in /build/reproducible-path/yosys-0.52/docs/source/using_yosys/more_scripting/model_check
line 47.)

Todo

add/expand supporting text

(The original entry is located in /build/reproducible-path/yosys-0.52/docs/source/using_yosys/more_scripting/model_check
line 91.)

Todo

replace inline code

(The original entry is located in /build/reproducible-path/yosys-0.52/docs/source/using_yosys/more_scripting/model_check
line 107.)

Todo

reduce overlap with *Scripting in Yosys* select section

(The original entry is located in /build/reproducible-path/yosys-0.52/docs/source/using_yosys/more_scripting/selections.rst
line 10.)

Todo

pending discussion on whether rule ordering is a bug or a feature

(The original entry is located in /build/reproducible-path/yosys-0.52/docs/source/using_yosys/more_scripting/selections.rst line 340.)

Todo

reflow for not presentation

(The original entry is located in /build/reproducible-path/yosys-0.52/docs/source/using_yosys/more_scripting/selections.rst line 385.)

Todo

more about logic minimization & register balancing et al with ABC

(The original entry is located in /build/reproducible-path/yosys-0.52/docs/source/using_yosys/synthesis/abc.rst, line 102.)

Todo

find a Liberty pygments style?

(The original entry is located in /build/reproducible-path/yosys-0.52/docs/source/using_yosys/synthesis/cell_libs.rst, line 93.)

Todo

add/expand supporting text, also mention custom pattern matching and pmgen

(The original entry is located in /build/reproducible-path/yosys-0.52/docs/source/using_yosys/synthesis/extract.rst, line 12.)

Todo

add/expand supporting text

(The original entry is located in /build/reproducible-path/yosys-0.52/docs/source/using_yosys/synthesis/extract.rst, line 103.)

Todo

Make `memory_*` notes less quick

(The original entry is located in /build/reproducible-path/yosys-0.52/docs/source/using_yosys/synthesis/memory.rst, line 18.)

Todo

describe `memory` images

(The original entry is located in /build/reproducible-path/yosys-0.52/docs/source/using_yosys/synthesis/memory.rst, line 34.)

Todo

assorted enables, e.g. cen, wen+ren

(The original entry is located in /build/reproducible-path/yosys-0.52/docs/source/using_yosys/synthesis/memory.rst, line 233.)

Todo

"outlines these optimizations" or "outlines *some*.."?

(The original entry is located in /build/reproducible-path/yosys-0.52/docs/source/using_yosys/synthesis/opt.rst, line 7.)

Todo

unsure if this is too much detail and should be in *Yosys internals*

(The original entry is located in /build/reproducible-path/yosys-0.52/docs/source/using_yosys/synthesis/opt.rst, line 27.)

Todo

`$_DFF_` isn't a valid cell

(The original entry is located in /build/reproducible-path/yosys-0.52/docs/source/using_yosys/synthesis/opt.rst, line 185.)

Todo

more on the other optimizations

(The original entry is located in /build/reproducible-path/yosys-0.52/docs/source/using_yosys/synthesis/opt.rst, line 227.)

Todo

describe `proc` images

(The original entry is located in /build/reproducible-path/yosys-0.52/docs/source/using_yosys/synthesis/proc.rst, line 29.)

Todo

comment on common `synth_*` options, like `-run`

(The original entry is located in /build/reproducible-path/yosys-0.52/docs/source/using_yosys/synthesis/synth.rst, line 4.)

Todo

less academic, check text is coherent

(The original entry is located in /build/reproducible-path/yosys-0.52/docs/source/using_yosys/synthesis/techmap_synth.rst line 4.)

Todo

newer techmap libraries appear to be largely `.v` instead of `.lib`

(The original entry is located in /build/reproducible-path/yosys-0.52/docs/source/using_yosys/synthesis/techmap_synth.rst line 76.)

Todo

check text is coherent

(The original entry is located in /build/reproducible-path/yosys-0.52/docs/source/yosys_internals/extending_yosys/extensio line 7.)

Todo

update to use `/code_examples/extensions/test*.log`

(The original entry is located in /build/reproducible-path/yosys-0.52/docs/source/yosys_internals/extending_yosys/extensio line 9.)

Todo

mention coding guide

(The original entry is located in /build/reproducible-path/yosys-0.52/docs/source/yosys_internals/extending_yosys/extensio line 14.)

Todo

consider replacing inline code

(The original entry is located in /build/reproducible-path/yosys-0.52/docs/source/yosys_internals/extending_yosys/extensio
line 44.)

Todo

add/expand supporting text

(The original entry is located in /build/reproducible-path/yosys-0.52/docs/source/yosys_internals/extending_yosys/extensio
line 62.)

Todo

replace inline code

(The original entry is located in /build/reproducible-path/yosys-0.52/docs/source/yosys_internals/extending_yosys/extensio
line 84.)

Todo

use my_cmd.cc literalincludes

(The original entry is located in /build/reproducible-path/yosys-0.52/docs/source/yosys_internals/extending_yosys/extensio
line 171.)

Todo

replace inline code

(The original entry is located in /build/reproducible-path/yosys-0.52/docs/source/yosys_internals/extending_yosys/extensio
line 213.)

Todo

replace inline code

(The original entry is located in /build/reproducible-path/yosys-0.52/docs/source/yosys_internals/extending_yosys/extensio
line 228.)

Todo

more about the included test suite and how to add tests

(The original entry is located in /build/reproducible-path/yosys-0.52/docs/source/yosys_internals/extending_yosys/test_su
line 4.)

Todo

are unit tests currently working

(The original entry is located in /build/reproducible-path/yosys-0.52/docs/source/yosys_internals/extending_yosys/test_su
line 17.)

Todo

less academic

(The original entry is located in /build/reproducible-path/yosys-0.52/docs/source/yosys_internals/flow/control_and_data.rs
line 4.)

Todo

less academic

(The original entry is located in /build/reproducible-path/yosys-0.52/docs/source/yosys_internals/flow/overview.rst,
line 4.)

Todo

Synthesizing Verilog arrays

Add some information on the generation of *$memrd* and *$memwr* cells and how they are processed in the memory pass.

(The original entry is located in /build/reproducible-path/yosys-0.52/docs/source/yosys_internals/flow/verilog_frontend.rst,
line 647.)

Todo

Synthesizing parametric designs

Add some information on the `RTLIL::Module::derive()` method and how it is used to synthesize parametric modules via the hierarchy pass.

(The original entry is located in /build/reproducible-path/yosys-0.52/docs/source/yosys_internals/flow/verilog_frontend.rst,
line 653.)

Todo

less academic

(The original entry is located in /build/reproducible-path/yosys-0.52/docs/source/yosys_internals/index.rst,
line 6.)

Todo

add RISC-V core example

(The original entry is located in /build/reproducible-path/yosys-0.52/docs/source/yosys_internals/index.rst, line 18.)

Todo

add/expand supporting text

(The original entry is located in /build/reproducible-path/yosys-0.52/docs/source/yosys_internals/techmap.rst, line 25.)

Todo

how much of this is specific to the read_verilog and should be in *The Verilog and AST frontends*?

(The original entry is located in /build/reproducible-path/yosys-0.52/docs/source/yosys_internals/verilog.rst, line 4.)

CHAPTER

ONE

WHAT IS YOSYS

Yosys began as a BSc thesis project by Claire Wolf intended to support synthesis for a CGRA (coarse-grained reconfigurable architecture). It then expanded into more general infrastructure for research on synthesis.

Modern Yosys has full support for the synthesizable subset of Verilog-2005 and has been described as "the GCC of hardware synthesis." Freely available and open source, Yosys finds use across hobbyist and commercial applications as well as academic.

Note

Yosys is released under the ISC License:

A permissive license lets people do anything with your code with proper attribution and without warranty. The ISC license is functionally equivalent to the BSD 2-Clause and MIT licenses, removing some language that is no longer necessary.

Together with the place and route tool nextpnr, Yosys can be used to program some FPGAs with a fully end-to-end open source flow (Lattice iCE40 and ECP5). It also does the synthesis portion for the OpenLane flow, targeting the SkyWater 130nm open source PDK for fully open source ASIC design. Yosys can also do formal verification with backends for solver formats like SMT2.

Yosys, and the accompanying Open Source EDA ecosystem, is currently maintained by Yosys Headquarters, with many of the core developers employed by YosysHQ GmbH. A commercial extension, Tabby CAD Suite, includes the Verific frontend for industry-grade SystemVerilog and VHDL support, formal verification with SVA, and formal apps.

1.1 What you can do with Yosys

- Read and process (most of) modern Verilog-2005 code
- Perform all kinds of operations on netlist (RTL, Logic, Gate)
- Perform logic optimizations and gate mapping with ABC

1.1.1 Typical applications for Yosys

- Synthesis of final production designs
- Pre-production synthesis (trial runs before investing in other tools)
- Conversion of full-featured Verilog to simple Verilog
- Conversion of Verilog to other formats (BLIF, BTOR, etc)
- Demonstrating synthesis algorithms (e.g. for educational purposes)
- Framework for experimenting with new algorithms
- Framework for building custom flows (Not limited to synthesis but also formal verification, reverse engineering, . . .)

1.1.2 Things you can't do

- Process high-level languages such as C/C++/SystemC
- Create physical layouts (place&route)
  - Check out nextpnr for that
- Rely on built-in syntax checking
  - Use an external tool like verilator instead

Todo

nextpnr for FPGAs, consider mentioning openlane, vpr, coriolis

1.2 The Yosys family

As mentioned above, YosysHQ maintains not just Yosys but an entire family of tools built around it. In no particular order:

SBY for formal verification
: Yosys provides input parsing and conversion to the formats used by the solver engines. Yosys also provides a unified witness framework for providing cover traces and counter examples for engines which don't natively support this. SBY source | SBY docs

EQY for equivalence checking
: In addition to input parsing and preparation, Yosys provides the plugin support enabling EQY to operate on designs directly. EQY source | EQY docs

MCY for mutation coverage
: Yosys is used to read the source design, generate a list of possible mutations to maximise design coverage, and then perform selected mutations. MCY source | MCY docs

SCY for deep formal traces
: Since SCY generates and runs SBY, Yosys provides the same utility for SCY as it does for SBY. Yosys additionally provides the trace concatenation needed for outputting the deep traces. SCY source

1.3 The original thesis abstract

The first version of the Yosys documentation was published as a bachelor thesis at the Vienna University of Technology [Wol13].

Abstract

Most of today's digital design is done in HDL code (mostly Verilog or VHDL) and with the help of HDL synthesis tools.

In special cases such as synthesis for coarse-grain cell libraries or when testing new synthesis algorithms it might be necessary to write a custom HDL synthesis tool or add new features to an existing one. In these cases the availability of a Free and Open Source (FOSS) synthesis tool that can be used as basis for custom tools would be helpful.

In the absence of such a tool, the Yosys Open SYnthesis Suite (Yosys) was developed. This document covers the design and implementation of this tool. At the moment the main focus of Yosys lies on the high-level aspects of digital synthesis. The pre-existing FOSS logic-synthesis tool ABC is used by Yosys to perform advanced gate-level optimizations.

An evaluation of Yosys based on real-world designs is included. It is shown that Yosys can be used as-is to synthesize such designs. The results produced by Yosys in this tests where successfully verified using formal verification and are comparable in quality to the results produced by a commercial synthesis tool.

Yosys is a Verilog HDL synthesis tool. This means that it takes a behavioural design description as input and generates an RTL, logical gate or physical gate level description of the design as output. Yosys' main strengths are behavioural and RTL synthesis. A wide range of commands (synthesis passes) exist within Yosys that can be used to perform a wide range of synthesis tasks within the domain of behavioural, rtl and logic synthesis. Yosys is designed to be extensible and therefore is a good basis for implementing custom synthesis tools for specialised tasks.

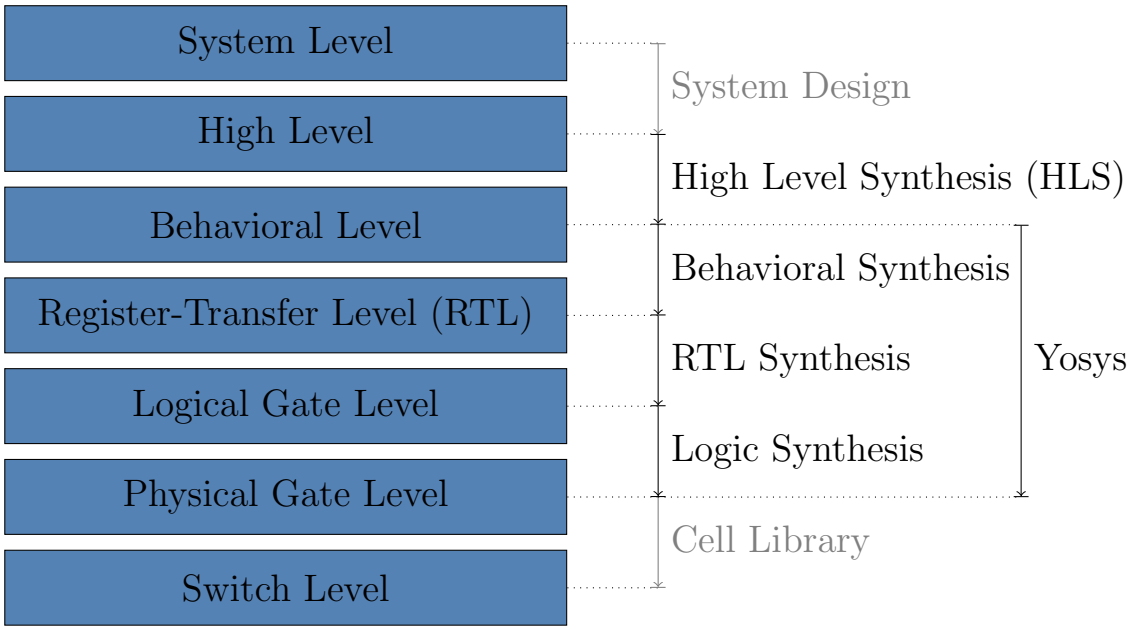

Fig. 1.1: Where Yosys exists in the layers of abstraction

1.3.1 Benefits of open source HDL synthesis

- Cost (also applies to `free as in free beer` solutions):

  Today the cost for a mask set in 180nm technology is far less than the cost for the design tools needed to design the mask layouts. Open Source ASIC flows are an important enabler for ASIC-level Open Source Hardware.

- Availability and Reproducibility:

  If you are a researcher who is publishing, you want to use tools that everyone else can also use. Even if most universities have access to all major commercial tools, you usually do not have easy access to the version that was used in a research project a couple of years ago. With Open Source tools you can even release the source code of the tool you have used alongside your data.

- Framework:

  Yosys is not only a tool. It is a framework that can be used as basis for other developments, so researchers and hackers alike do not need to re-invent the basic functionality. Extensibility was one of Yosys' design goals.

- All-in-one:

  Because of the framework characteristics of Yosys, an increasing number of features become available in one tool. Yosys not only can be used for circuit synthesis but also for formal equivalence checking, SAT solving, and for circuit analysis, to name just a few other application domains. With proprietary software one needs to learn a new tool for each of these applications.

- Educational Tool:

  Proprietary synthesis tools are at times very secretive about their inner workings. They often are `black boxes`. Yosys is very open about its internals and it is easy to observe the different steps of synthesis.

1.3.2 History of Yosys

Todo

Consider a less academic version of the History of Yosys

A Hardware Description Language (HDL) is a computer language used to describe circuits. A HDL synthesis tool is a computer program that takes a formal description of a circuit written in an HDL as input and generates a netlist that implements the given circuit as output.

Currently the most widely used and supported HDLs for digital circuits are Verilog [A+02, A+06] and VHDL (VHSIC HDL, where VHSIC is an acronym for Very-High-Speed Integrated Circuits) [A+04, A+09]. Both HDLs are used for test and verification purposes as well as logic synthesis, resulting in a set of synthesizable and a set of non-synthesizable language features. In this document we only look at the synthesizable subset of the language features.

In recent work on heterogeneous coarse-grain reconfigurable logic [WGS+12] the need for a custom application-specific HDL synthesis tool emerged. It was soon realised that a synthesis tool that understood Verilog or VHDL would be preferred over a synthesis tool for a custom HDL. Given an existing Verilog or VHDL front end, the work for writing the necessary additional features and integrating them in an existing tool can be estimated to be about the same as writing a new tool with support for a minimalistic custom HDL.

The proposed custom HDL synthesis tool should be licensed under a Free and Open Source Software (FOSS) licence. So an existing FOSS Verilog or VHDL synthesis tool would have been needed as basis to build upon.

The main advantages of choosing Verilog or VHDL is the ability to synthesize existing HDL code and to mitigate the requirement for circuit-designers to learn a new language. In order to take full advantage of any existing FOSS Verilog or VHDL tool, such a tool would have to provide a feature-complete implementation of the synthesizable HDL subset.

Basic RTL synthesis is a well understood field [HS96]. Lexing, parsing and processing of computer languages [ASU86] is a thoroughly researched field. All the information required to write such tools has been openly available for a long time, and it is therefore likely that a FOSS HDL synthesis tool with a feature-complete Verilog or VHDL front end must exist which can be used as a basis for a custom RTL synthesis tool.

Due to the author's preference for Verilog over VHDL it was decided early on to go for Verilog instead of VHDL[1]. So the existing FOSS Verilog synthesis tools were evaluated. The results of this evaluation are utterly devastating. Therefore a completely new Verilog synthesis tool was implemented and is recommended as basis for custom synthesis tools. This is the tool that is discussed in this document.

[1] A quick investigation into FOSS VHDL tools yielded similar grim results for FOSS VHDL synthesis tools.

CHAPTER

TWO

GETTING STARTED WITH YOSYS

This section covers how to get started with Yosys, from installation to a guided walkthrough of synthesizing a design for hardware, and finishing with an introduction to writing re-usable Yosys scripts.

2.1 Installation

This document will guide you through the process of installing Yosys.

2.1.1 CAD suite(s)

Yosys is part of the Tabby CAD Suite and the OSS CAD Suite! The easiest way to use yosys is to install the binary software suite, which contains all required dependencies and related tools.

- Contact YosysHQ for a Tabby CAD Suite Evaluation License and download link
- OR go to https://github.com/YosysHQ/oss-cad-suite-build/releases to download the free OSS CAD Suite
- Follow the Install Instructions on GitHub

Make sure to get a Tabby CAD Suite Evaluation License if you need features such as industry-grade SystemVerilog and VHDL parsers!

For more information about the difference between Tabby CAD Suite and the OSS CAD Suite, please visit https://www.yosyshq.com/tabby-cad-datasheet

Many Linux distributions also provide Yosys binaries, some more up to date than others. Check with your package manager!

Targeted architectures

The OSS CAD Suite releases nightly builds for the following architectures:

- **linux-x64** - Most personal Linux based computers
- **darwin-x64** - macOS 12 or later with Intel CPU
- **darwin-arm64** - macOS 12 or later with M1/M2 CPU
- **windows-x64** - Targeted for Windows 10 and 11
- **linux-arm64** - Devices such as Raspberry Pi with 64bit OS

For more information about the targeted architectures, and the current build status, check the OSS CAD Suite git repository.

2.1.2 Building from source

The Yosys source files can be obtained from the YosysHQ/Yosys git repository. ABC and some of the other libraries used are included as git submodules. To clone these submodules at the same time, use e.g.:

```
git clone --recurse-submodules https://github.com/YosysHQ/yosys.git  # ..or..
git clone https://github.com/YosysHQ/yosys.git
cd yosys
git submodule update --init --recursive
```

Note

As of Yosys v0.47, releases include a `yosys.tar.gz` file which includes all source code and all sub-modules in a single archive. This can be used as an alternative which does not rely on `git`.

Supported platforms

The following platforms are supported and regularly tested:

- Linux
- macOS

Other platforms which may work, but instructions may not be up to date and are not regularly tested:

- FreeBSD
- WSL
- Windows with (e.g.) Cygwin

Build prerequisites

A C++ compiler with C++17 support is required as well as some standard tools such as GNU Flex, GNU Bison, Make and Python. Some additional tools: readline, libffi, Tcl and zlib; are optional but enabled by default (see **`ENABLE_*`** settings in Makefile). Graphviz and Xdot are used by the *`show`* command to display schematics.

Installing all prerequisites for Ubuntu 20.04:

```
sudo apt-get install gperf build-essential bison flex \
   libreadline-dev gawk tcl-dev libffi-dev git graphviz \
   xdot pkg-config python3 libboost-system-dev \
   libboost-python-dev libboost-filesystem-dev zlib1g-dev
```

Installing all prerequisites for macOS 13 (with Homebrew):

```
brew tap Homebrew/bundle && brew bundle
```

or MacPorts:

```
sudo port install bison flex readline gawk libffi graphviz \
   pkgconfig python311 boost zlib tcl
```

On FreeBSD use the following command to install all prerequisites:

```
pkg install bison flex readline gawk libffi graphviz \
   pkgconf python311 tcl-wrapper boost-libs
```

Note

On FreeBSD system use gmake instead of make. To run tests use: `MAKE=gmake CXX=cxx CC=cc gmake test`

For Cygwin use the following command to install all prerequisites, or select these additional packages:

```
setup-x86_64.exe -q --packages=bison,flex,gcc-core,gcc-g++,git,libffi-devel,libreadline-
↪devel,make,pkg-config,python3,tcl-devel,boost-build,zlib-devel
```

Warning

As of this writing, Cygwin only supports up to Python 3.9.16 while the minimum required version of Python is 3.11. This means that Cygwin is not compatible with many of the Python-based frontends. While this does not currently prevent Yosys itself from working, no guarantees are made for continued support. It is instead recommended to use Windows Subsystem for Linux (WSL) and follow the instructions for Ubuntu.

Build configuration

The Yosys build is based solely on Makefiles, and uses a number of variables which influence the build process. The recommended method for configuring builds is with a `Makefile.conf` file in the root `yosys` directory. The following commands will clean the directory and provide an initial configuration file:

```
make config-clang    # ..or..
make config-gcc
```

Check the root Makefile to see what other configuration targets are available. Other variables can then be added to the `Makefile.conf` as needed, for example:

```
echo "ENABLE_ZLIB := 0" >> Makefile.conf
```

Using one of these targets will set the `CONFIG` variable to something other than `none`, and will override the environment variable for `CXX`. To use a different compiler than the default when building, use:

```
make CXX=$CXX        # ..or..
make CXX="g++-11"
```

Note

Setting the compiler in this way will prevent some other options such as `ENABLE_CCACHE` from working as expected.

If you have clang, and (a compatible version of) `ld.lld` available in PATH, it's recommended to speed up incremental builds with lld by enabling LTO with `ENABLE_LTO=1`. On macOS, LTO requires using clang from homebrew rather than clang from xcode. For example:

```
make ENABLE_LTO=1 CXX=$(brew --prefix)/opt/llvm/bin/clang++
```

By default, building (and installing) yosys will build (and install) ABC, using `yosys-abc` as the executable name. To use an existing ABC executable instead, set the `ABCEXTERNAL` make variable to point to the desired executable.

Running the build system

From the root `yosys` directory, call the following commands:

```
make
sudo make install
```

To use a separate (out-of-tree) build directory, provide a path to the Makefile.

```
mkdir build; cd build
make -f ../Makefile
```

Out-of-tree builds require a clean source tree.

See also

Refer to *Testing Yosys* for details on testing Yosys once compiled.

2.1.3 Source tree and build system

The Yosys source tree is organized into the following top-level directories:

backends/
: This directory contains a subdirectory for each of the backend modules.

docs/
: Contains the source for this documentation, including images and sample code.

examples/
: Contains example code for using Yosys with some other tools including a demo of the Yosys Python api, and synthesizing for various toolchains such as Intel and Anlogic.

frontends/
: This directory contains a subdirectory for each of the frontend modules.

kernel/
: This directory contains all the core functionality of Yosys. This includes the functions and definitions for working with the RTLIL data structures (`rtlil.h/cc`), the `main()` function (`driver.cc`), the internal framework for generating log messages (`log.h/cc`), the internal framework for registering and calling passes (`register.h/cc`), some core commands that are not really passes (`select.cc`, `show.cc`, ...) and a couple of other small utility libraries.

libs/
: Libraries packaged with Yosys builds are contained in this folder. See *Auxiliary libraries*.

misc/
: Other miscellany which doesn't fit anywhere else.

passes/
: This directory contains a subdirectory for each pass or group of passes. For example as of this writing the directory `passes/hierarchy/` contains the code for three passes: *`hierarchy`*, *`submod`*, and *`uniquify`*.

techlibs/
: This directory contains simulation models and standard implementations for the cells from the internal cell library.

tests/
: This directory contains the suite of unit tests and regression tests used by Yosys. See *Testing Yosys*.

The top-level Makefile includes `frontends/*/Makefile.inc`, `passes/*/Makefile.inc` and `backends/*/Makefile.inc`. So when extending Yosys it is enough to create a new directory in `frontends/`, `passes/` or `backends/` with your sources and a `Makefile.inc`. The Yosys kernel automatically detects all commands linked with Yosys. So it is not needed to add additional commands to a central list of commands.

Good starting points for reading example source code to learn how to write passes are `passes/opt/opt_dff.cc` and `passes/opt/opt_merge.cc`.

Users of the Qt Creator IDE can generate a QT Creator project file using make qtcreator. Users of the Eclipse IDE can use the "Makefile Project with Existing Code" project type in the Eclipse "New Project" dialog (only available after the CDT plugin has been installed) to create an Eclipse project in order to programming extensions to Yosys or just browse the Yosys code base.

2.2 Synthesis starter

This page will be a guided walkthrough of the prepackaged iCE40 FPGA synthesis script - *synth_ice40*. We will take a simple design through each step, looking at the commands being called and what they do to the design. While *synth_ice40* is specific to the iCE40 platform, most of the operations we will be discussing are common across the majority of FPGA synthesis scripts. Thus, this document will provide a good foundational understanding of how synthesis in Yosys is performed, regardless of the actual architecture being used.

See also

Advanced usage docs for *Synth commands*

2.2.1 Demo design

First, let's quickly look at the design we'll be synthesizing:

Todo

reconsider including the whole (~77 line) design like this

Listing 2.1: `fifo.v`

```
// address generator/counter
module addr_gen
#(  parameter MAX_DATA=256,
        localparam AWIDTH = $clog2(MAX_DATA)
) ( input en, clk, rst,
        output reg [AWIDTH-1:0] addr
);
        initial addr = 0;

        // async reset
        // increment address when enabled
        always @(posedge clk or posedge rst)
                if (rst)
                        addr <= 0;
                else if (en) begin
```

(continues on next page)

(continued from previous page)

```
                        if ({'0, addr} == MAX_DATA-1)
                                addr <= 0;
                        else
                                addr <= addr + 1;
                end
endmodule //addr_gen

// Define our top level fifo entity
module fifo
#(  parameter MAX_DATA=256,
        localparam AWIDTH = $clog2(MAX_DATA)
) ( input wen, ren, clk, rst,
        input [7:0] wdata,
        output reg [7:0] rdata,
        output reg [AWIDTH:0] count
);
        // fifo storage
        // sync read before write
        wire [AWIDTH-1:0] waddr, raddr;
        reg [7:0] data [MAX_DATA-1:0];
        always @(posedge clk) begin
                if (wen)
                        data[waddr] <= wdata;
                rdata <= data[raddr];
        end // storage

        // addr_gen for both write and read addresses
        addr_gen #(.MAX_DATA(MAX_DATA))
        fifo_writer (
                .en     (wen),
                .clk    (clk),
                .rst    (rst),
                .addr   (waddr)
        );

        addr_gen #(.MAX_DATA(MAX_DATA))
        fifo_reader (
                .en     (ren),
                .clk    (clk),
                .rst    (rst),
                .addr   (raddr)
        );

        // status signals
        initial count = 0;

        always @(posedge clk or posedge rst) begin
                if (rst)
                        count <= 0;
                else if (wen && !ren)
                        count <= count + 1;
                else if (ren && !wen)
```

(continues on next page)

(continued from previous page)

```
68                          count <= count - 1;
69          end
70
71  endmodule
```

Todo

fifo.v description

While the open source *read_verilog* frontend generally does a pretty good job at processing valid Verilog input, it does not provide very good error handling or reporting. Using an external tool such as verilator before running Yosys is highly recommended. We can quickly check the Verilog syntax of our design by calling `verilator --lint-only fifo.v`.

2.2.2 Loading the design

Let's load the design into Yosys. From the command line, we can call `yosys fifo.v`. This will open an interactive Yosys shell session and immediately parse the code from *fifo.v* and convert it into an Abstract Syntax Tree (AST). If you are interested in how this happens, there is more information in the document, *The Verilog and AST frontends*. For now, suffice it to say that we do this to simplify further processing of the design. You should see something like the following:

```
$ yosys fifo.v

-- Parsing `fifo.v' using frontend ` -vlog2k' --

1. Executing Verilog-2005 frontend: fifo.v
Parsing Verilog input from `fifo.v' to AST representation.
Storing AST representation for module `$abstract\addr_gen'.
Storing AST representation for module `$abstract\fifo'.
Successfully finished Verilog frontend.
```

See also

Advanced usage docs for *Loading a design*

2.2.3 Elaboration

Now that we are in the interactive shell, we can call Yosys commands directly. Our overall goal is to call `synth_ice40 -top fifo`, but for now we can run each of the commands individually for a better sense of how each part contributes to the flow. We will also start with just a single module; `addr_gen`.

At the bottom of the *help* output for *synth_ice40* is the complete list of commands called by this script. Let's start with the section labeled `begin`:

Listing 2.2: `begin` section

```
read_verilog -D ICE40_HX -lib -specify +/ice40/cells_sim.v
hierarchy -check -top <top>
proc
```

`read_verilog -D ICE40_HX -lib -specify +/ice40/cells_sim.v` loads the iCE40 cell models which allows us to include platform specific IP blocks in our design. PLLs are a common example of this, where we might need to reference `SB_PLL40_CORE` directly rather than being able to rely on mapping passes later. Since our simple design doesn't use any of these IP blocks, we can skip this command for now. Because these cell models will also be needed once we start mapping to hardware we will still need to load them later.

Note

`+/` is a dynamic reference to the Yosys `share` directory. By default, this is `/usr/local/share/yosys`. If using a locally built version of Yosys from the source directory, this will be the `share` folder in the same directory.

The addr_gen module

Since we're just getting started, let's instead begin with `hierarchy -top addr_gen`. This command declares that the top level module is `addr_gen`, and everything else can be discarded.

Listing 2.3: `addr_gen` module source

```
module addr_gen
#(  parameter MAX_DATA=256,
        localparam AWIDTH = $clog2(MAX_DATA)
) ( input en, clk, rst,
        output reg [AWIDTH-1:0] addr
);
        initial addr = 0;

        // async reset
        // increment address when enabled
        always @(posedge clk or posedge rst)
                if (rst)
                        addr <= 0;
                else if (en) begin
                        if ({'0, addr} == MAX_DATA-1)
                                addr <= 0;
                        else
                                addr <= addr + 1;
                end
endmodule //addr_gen
```

Note

hierarchy should always be the first command after the design has been read. By specifying the top module, *hierarchy* will also set the `(* top *)` attribute on it. This is used by other commands that need to know which module is the top.

Listing 2.4: `hierarchy -top addr_gen` output

```
yosys> hierarchy -top addr_gen

2. Executing HIERARCHY pass (managing design hierarchy).
```

(continues on next page)

(continued from previous page)

```
3. Executing AST frontend in derive mode using pre-parsed AST for module `\addr_gen'.
Generating RTLIL representation for module `\addr_gen'.

3.1. Analyzing design hierarchy..
Top module:  \addr_gen

3.2. Analyzing design hierarchy..
Top module:  \addr_gen
Removing unused module `$abstract\fifo'.
Removing unused module `$abstract\addr_gen'.
Removed 2 unused modules.
```

Our `addr_gen` circuit now looks like this:

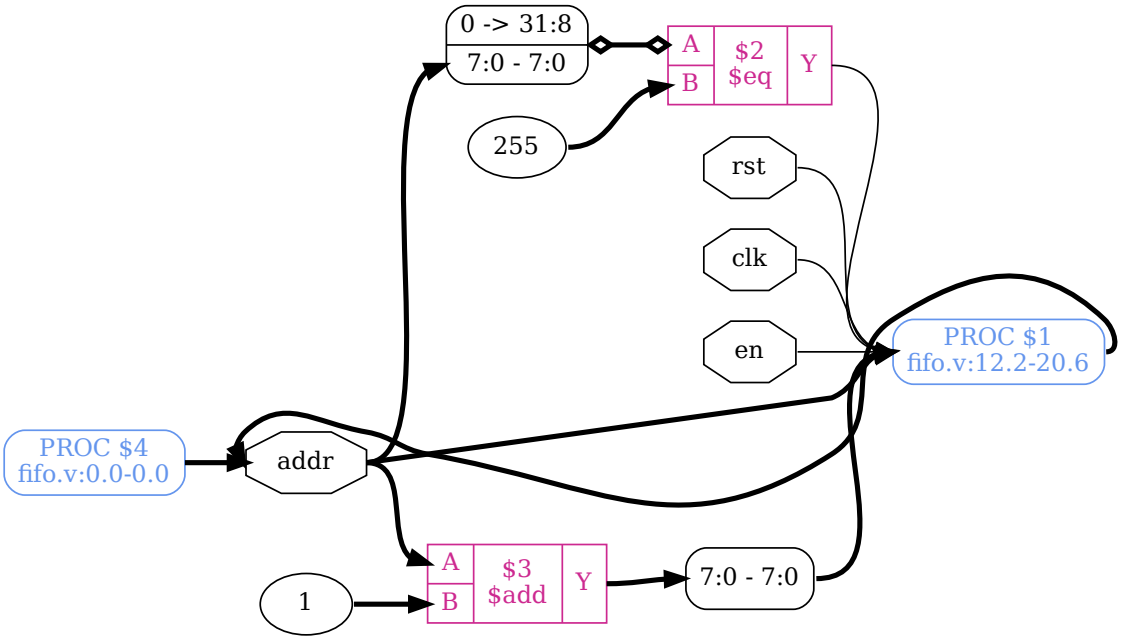

Fig. 2.1: `addr_gen` module after *`hierarchy`*

Simple operations like `addr + 1` and `addr == MAX_DATA-1` can be extracted from our `always @` block in *addr_gen module source*. This gives us the highlighted *`$add`* and *`$eq`* cells we see. But control logic (like the `if .. else`) and memory elements (like the `addr <= 0`) are not so straightforward. These get put into "processes", shown in the schematic as `PROC`. Note how the second line refers to the line numbers of the start/end of the corresponding `always @` block. In the case of an `initial` block, we instead see the `PROC` referring to line 0.

To handle these, let us now introduce the next command: *proc - translate processes to netlists*. *`proc`* is a macro command like *`synth_ice40`*. Rather than modifying the design directly, it instead calls a series of other commands. In the case of *`proc`*, these sub-commands work to convert the behavioral logic of processes into multiplexers and registers. Let's see what happens when we run it. For now, we will call `proc -noopt`

to prevent some automatic optimizations which would normally happen.

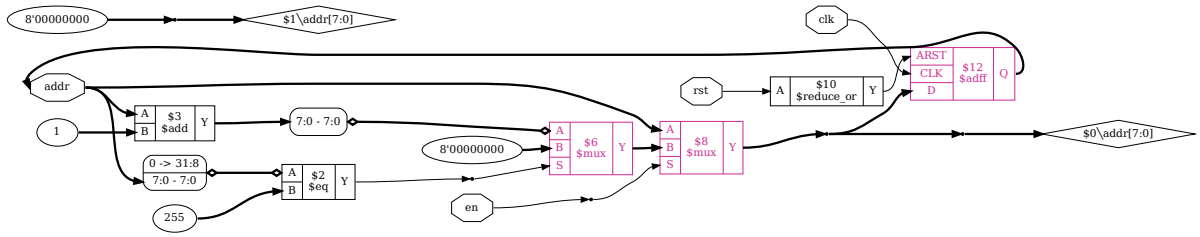

Fig. 2.2: `addr_gen` module after `proc -noopt`

There are now a few new cells from our `always @`, which have been highlighted. The `if` statements are now modeled with *`$mux`* cells, while the register uses an *`$adff`* cell. If we look at the terminal output we can also see all of the different `proc_*` commands being called. We will look at each of these in more detail in *Converting process blocks*.

Notice how in the top left of *addr_gen module after proc -noopt* we have a floating wire, generated from the initial assignment of 0 to the `addr` wire. However, this initial assignment is not synthesizable, so this will need to be cleaned up before we can generate the physical hardware. We can do this now by calling *`clean`*. We're also going to call *`opt_expr`* now, which would normally be called at the end of *`proc`*. We can call both commands at the same time by separating them with a colon and space: `opt_expr; clean`.

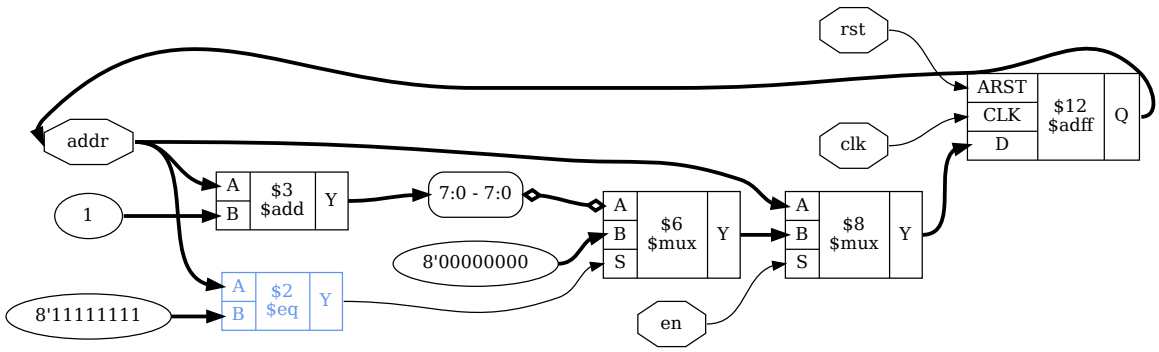

Fig. 2.3: `addr_gen` module after `opt_expr; clean`

You may also notice that the highlighted *`$eq`* cell input of `255` has changed to `8'11111111`. Constant values are presented in the format `<bit_width>'<bits>`, with 32-bit values instead using the decimal number. This indicates that the constant input has been reduced from 32-bit wide to 8-bit wide. This is a side-effect of running *`opt_expr`*, which performs constant folding and simple expression rewriting. For more on why this happens, refer to *Optimization passes* and the *section on opt_expr*.

Note

clean - remove unused cells and wires can also be called with two semicolons after any command, for example we could have called `opt_expr;;` instead of `opt_expr; clean`. You may notice some scripts will end each line with `;;`. It is beneficial to run *`clean`* before inspecting intermediate products to remove disconnected parts of the circuit which have been left over, and in some cases can reduce the processing

required in subsequent commands.

Todo

consider a brief glossary for terms like adff

See also

Advanced usage docs for

- *Converting process blocks*
- *Optimization passes*

The full example

Let's now go back and check on our full design by using `hierarchy -check -top fifo`. By passing the `-check` option there we are also telling the *hierarchy* command that if the design includes any non-blackbox modules without an implementation it should return an error.

Note that if we tried to run this command now then we would get an error. This is because we already removed all of the modules other than `addr_gen`. We could restart our shell session, but instead let's use two new commands:

- *design - save, restore and reset current design*, and
- *read_verilog - read modules from Verilog file*.

Listing 2.5: reloading `fifo.v` and running `hierarchy -check -top fifo`

```
yosys> design -reset

yosys> read_verilog fifo.v

11. Executing Verilog-2005 frontend: fifo.v
Parsing Verilog input from `fifo.v' to AST representation.
Generating RTLIL representation for module `\addr_gen'.
Generating RTLIL representation for module `\fifo'.
Successfully finished Verilog frontend.

yosys> hierarchy -check -top fifo

12. Executing HIERARCHY pass (managing design hierarchy).

12.1. Analyzing design hierarchy..
Top module:  \fifo
Used module:     \addr_gen
Parameter \MAX_DATA = 256

12.2. Executing AST frontend in derive mode using pre-parsed AST for module `\addr_gen'.
Parameter \MAX_DATA = 256
```

(continues on next page)

(continued from previous page)

```
Generating RTLIL representation for module `$paramod\addr_gen\MAX_DATA=s32
↪'00000000000000000000000100000000'.
Parameter \MAX_DATA = 256
Found cached RTLIL representation for module `$paramod\addr_gen\MAX_DATA=s32
↪'00000000000000000000000100000000'.

12.3. Analyzing design hierarchy..
Top module:  \fifo
Used module:     $paramod\addr_gen\MAX_DATA=s32'00000000000000000000000100000000

12.4. Analyzing design hierarchy..
Top module:  \fifo
Used module:     $paramod\addr_gen\MAX_DATA=s32'00000000000000000000000100000000
Removing unused module `\addr_gen'.
Removed 1 unused modules.
```

Notice how this time we didn't see any of those `$abstract` modules? That's because when we ran `yosys fifo.v`, the first command Yosys called was `read_verilog -defer fifo.v`. The `-defer` option there tells *read_verilog* only read the abstract syntax tree and defer actual compilation to a later *hierarchy* command. This is useful in cases where the default parameters of modules yield invalid code which is not synthesizable. This is why Yosys defers compilation automatically and is one of the reasons why hierarchy should always be the first command after loading the design. If we know that our design won't run into this issue, we can skip the `-defer`.

Todo

hierarchy failure modes

Note

The number before a command's output increments with each command run. Don't worry if your numbers don't match ours! The output you are seeing comes from the same script that was used to generate the images in this document, included in the source as `fifo.ys`. There are extra commands being run which you don't see, but feel free to try them yourself, or play around with different commands. You can always start over with a clean slate by calling `exit` or hitting `ctrl+d` (i.e. EOF) and re-launching the Yosys interactive terminal. `ctrl+c` (i.e. SIGINT) will also end the terminal session but will return an error code rather than exiting gracefully.

We can also run *proc* now to finish off the full *begin section*. Because the design schematic is quite large, we will be showing just the data path for the `rdata` output. If you would like to see the entire design for yourself, you can do so with *show - generate schematics using graphviz*. Note that the *show* command only works with a single module, so you may need to call it with `show fifo`. *Displaying schematics* section in *Scripting in Yosys* has more on how to use *show*.

The highlighted `fifo_reader` block contains an instance of the *addr_gen module after proc -noopt* that we looked at earlier. Notice how the type is shown as `$paramod\\addr_gen\\MAX_DATA=s32'...`. This is a "parametric module": an instance of the `addr_gen` module with the `MAX_DATA` parameter set to the given value.

The other highlighted block is a *$memrd* cell. At this stage of synthesis we don't yet know what type of memory is going to be implemented, but we *do* know that `rdata <= data[raddr];` could be implemented

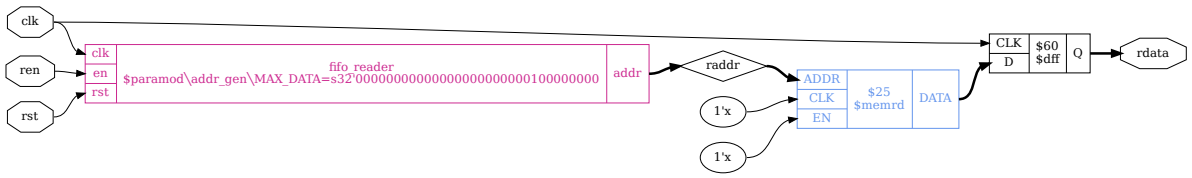

Fig. 2.4: `rdata` output after *proc*

as a read from memory. Note that the *$memrd* cell here is asynchronous, with both the clock and enable signal undefined; shown with the `1'x` inputs.

See also

Advanced usage docs for *Converting process blocks*

2.2.4 Flattening

At this stage of a synthesis flow there are a few other commands we could run. In *synth_ice40* we get these:

Listing 2.6: `flatten` section

```
flatten
tribuf -logic
deminout
```

First off is *flatten*. Flattening the design like this can allow for optimizations between modules which would otherwise be missed. Let's run `flatten;;` on our design.

Listing 2.7: output of `flatten;;`

```
yosys> flatten

15. Executing FLATTEN pass (flatten design).
Deleting now unused module $paramod\addr_gen\MAX_DATA=s32
↪'00000000000000000000000100000000.
<suppressed ~2 debug messages>

yosys> clean
Removed 3 unused cells and 28 unused wires.
```

The pieces have moved around a bit, but we can see *addr_gen module after proc -noopt* from earlier has replaced the `fifo_reader` block in *rdata output after proc*. We can also see that the `addr` output has been renamed to `fifo_reader.addr` and merged with the `raddr` wire feeding into the *$memrd* cell. This wire merging happened during the call to *clean* which we can see in the *output of flatten;;*.

Note

flatten and *clean* would normally be combined into a single `yosys> flatten;;` output, but they appear separately here as a side effect of using *echo* for generating the terminal style output.

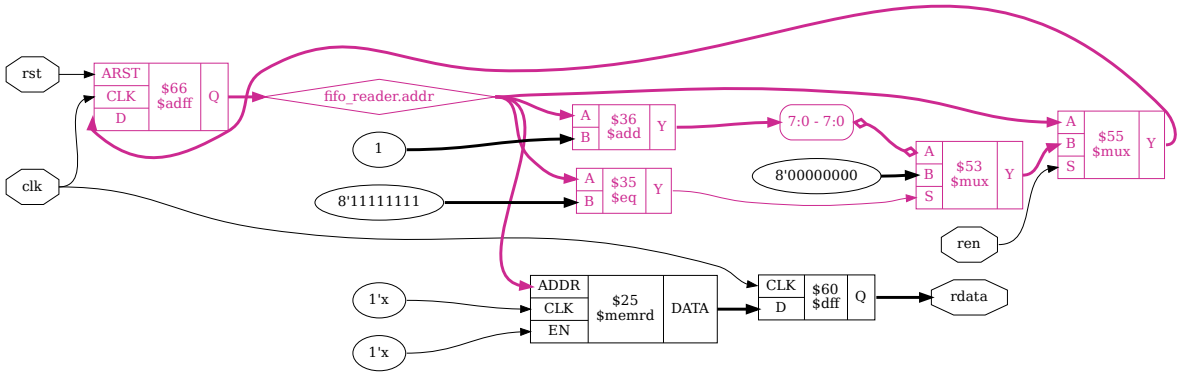

Fig. 2.5: `rdata` output after `flatten;;`

Depending on the target architecture, this stage of synthesis might also see commands such as *`tribuf`* with the `-logic` option and *`deminout`*. These remove tristate and inout constructs respectively, replacing them with logic suitable for mapping to an FPGA. Since we do not have any such constructs in our example running these commands does not change our design.

2.2.5 The coarse-grain representation

At this stage, the design is in coarse-grain representation. It still looks recognizable, and cells are word-level operators with parametrizable width. This is the stage of synthesis where we do things like const propagation, expression rewriting, and trimming unused parts of wires.

This is also where we convert our FSMs and hard blocks like DSPs or memories. Such elements have to be inferred from patterns in the design and there are special passes for each. Detection of these patterns can also be affected by optimizations and other transformations done previously.

> **Note**
>
> While the iCE40 flow had a *flatten section* and put *`proc`* in the *begin section*, some synthesis scripts will instead include these in this section.

Part 1

In the iCE40 flow, we start with the following commands:

Listing 2.8: `coarse` section (part 1)

```
opt_expr
opt_clean
check
opt -nodffe -nosdff
fsm
opt
```

We've already come across *`opt_expr`*, and *`opt_clean`* is the same as *`clean`* but with more verbose output. The *`check`* pass identifies a few obvious problems which will cause errors later. Calling it here lets us fail faster rather than wasting time on something we know is impossible.

Next up is `opt -nodffe -nosdff` performing a set of simple optimizations on the design. This command also ensures that only a specific subset of FF types are included, in preparation for the next command: *fsm - extract and optimize finite state machines*. Both *opt* and *fsm* are macro commands which are explored in more detail in *Optimization passes* and *FSM handling* respectively.

Up until now, the data path for `rdata` has remained the same since *rdata output after flatten;;*. However the next call to *opt* does cause a change. Specifically, the call to *opt_dff* without the `-nodffe -nosdff` options is able to fold one of the *$mux* cells into the *$adff* to form an *$adffe* cell; highlighted below:

Listing 2.9: output of *opt_dff*

```
yosys> opt_dff

17. Executing OPT_DFF pass (perform DFF optimizations).
Adding EN signal on $procdff$59 ($adff) from module fifo (D = $0\count[8:0], Q = \count).
Adding EN signal on $flatten\fifo_writer.$procdff$66 ($adff) from module fifo (D =
↪$flatten\fifo_writer.$procmux$53_Y, Q = \fifo_writer.addr).
Adding EN signal on $flatten\fifo_reader.$procdff$66 ($adff) from module fifo (D =
↪$flatten\fifo_reader.$procmux$53_Y, Q = \fifo_reader.addr).
```

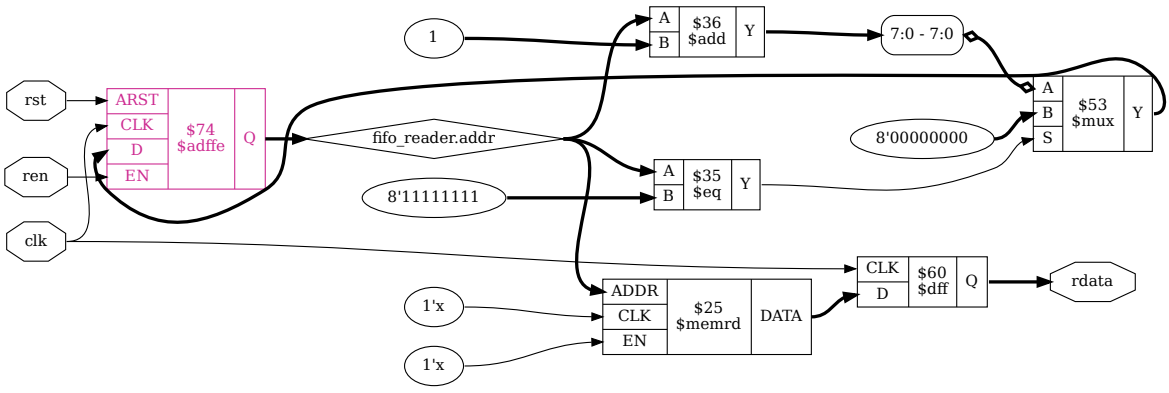

Fig. 2.6: `rdata` output after *opt_dff*

See also

Advanced usage docs for

- *FSM handling*
- *Optimization passes*

Part 2

The next group of commands performs a series of optimizations:

Listing 2.10: `coarse` section (part 2)

```
wreduce
peepopt
```

(continues on next page)

(continued from previous page)

```
opt_clean
share
techmap -map +/cmp2lut.v -D LUT_WIDTH=4
opt_expr
opt_clean
memory_dff [-no-rw-check]
```

First up is *wreduce - reduce the word size of operations if possible*. If we run this we get the following:

Listing 2.11: output of *wreduce*

```
yosys> wreduce

19. Executing WREDUCE pass (reducing word size of cells).
Removed top 31 bits (of 32) from port B of cell fifo.$add$fifo.v:66$29 ($add).
Removed top 23 bits (of 32) from port Y of cell fifo.$add$fifo.v:66$29 ($add).
Removed top 31 bits (of 32) from port B of cell fifo.$sub$fifo.v:68$32 ($sub).
Removed top 23 bits (of 32) from port Y of cell fifo.$sub$fifo.v:68$32 ($sub).
Removed top 1 bits (of 2) from port B of cell fifo.$auto$opt_dff.cc:195:make_patterns_
↪logic$72 ($ne).
Removed cell fifo.$flatten\fifo_writer.$procmux$55 ($mux).
Removed top 31 bits (of 32) from port B of cell fifo.$flatten\fifo_writer.$add$fifo.v:19
↪$36 ($add).
Removed top 24 bits (of 32) from port Y of cell fifo.$flatten\fifo_writer.$add$fifo.v:19
↪$36 ($add).
Removed cell fifo.$flatten\fifo_reader.$procmux$55 ($mux).
Removed top 31 bits (of 32) from port B of cell fifo.$flatten\fifo_reader.$add$fifo.v:19
↪$36 ($add).
Removed top 24 bits (of 32) from port Y of cell fifo.$flatten\fifo_reader.$add$fifo.v:19
↪$36 ($add).
Removed top 23 bits (of 32) from wire fifo.$add$fifo.v:66$29_Y.
Removed top 24 bits (of 32) from wire fifo.$flatten\fifo_reader.$add$fifo.v:19$36_Y.
Removed top 24 bits (of 32) from wire fifo.$flatten\fifo_writer.$add$fifo.v:19$36_Y.

yosys> show -notitle -format dot -prefix rdata_wreduce o:rdata %ci*

20. Generating Graphviz representation of design.
Writing dot description to `rdata_wreduce.dot'.
Dumping selected parts of module fifo to page 1.

yosys> opt_clean

21. Executing OPT_CLEAN pass (remove unused cells and wires).
Finding unused cells or wires in module \fifo..
Removed 0 unused cells and 5 unused wires.
<suppressed ~1 debug messages>

yosys> memory_dff

22. Executing MEMORY_DFF pass (merging $dff cells to $memrd).
Checking read port `\data'[0] in module `\fifo': merging output FF to cell.
    Write port 0: non-transparent.
```

Looking at the data path for `rdata`, the most relevant of these width reductions are the ones affecting `fifo.$flatten\fifo_reader.$add$fifo.v`. That is the *$add* cell incrementing the fifo_reader address. We can look at the schematic and see the output of that cell has now changed.

Todo

pending bugfix in *wreduce* and/or *opt_clean*

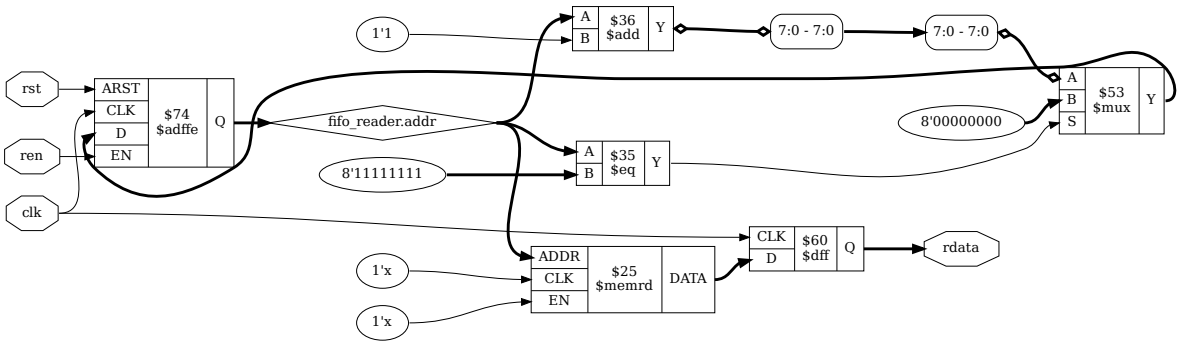

Fig. 2.7: `rdata` output after *wreduce*

The next two (new) commands are *peepopt - collection of peephole optimizers* and *share - perform sat-based resource sharing*. Neither of these affect our design, and they're explored in more detail in *Optimization passes*, so let's skip over them. `techmap -map +/cmp2lut.v -D LUT_WIDTH=4` optimizes certain comparison operators by converting them to LUTs instead. The usage of *techmap* is explored more in *Technology mapping*.

Our next command to run is *memory_dff - merge input/output DFFs into memory read ports*.

Listing 2.12: output of *memory_dff*

```
yosys> memory_dff

22. Executing MEMORY_DFF pass (merging $dff cells to $memrd).
Checking read port `\data'[0] in module `\fifo': merging output FF to cell.
    Write port 0: non-transparent.
```

As the title suggests, *memory_dff* has merged the output *$dff* into the *$memrd* cell and converted it to a *$memrd_v2* (highlighted). This has also connected the `CLK` port to the `clk` input as it is now a synchronous memory read with appropriate enable (`EN=1'1`) and reset (`ARST=1'0` and `SRST=1'0`) inputs.

See also

Advanced usage docs for

- *Optimization passes*
- *Technology mapping*
- *Memory handling*

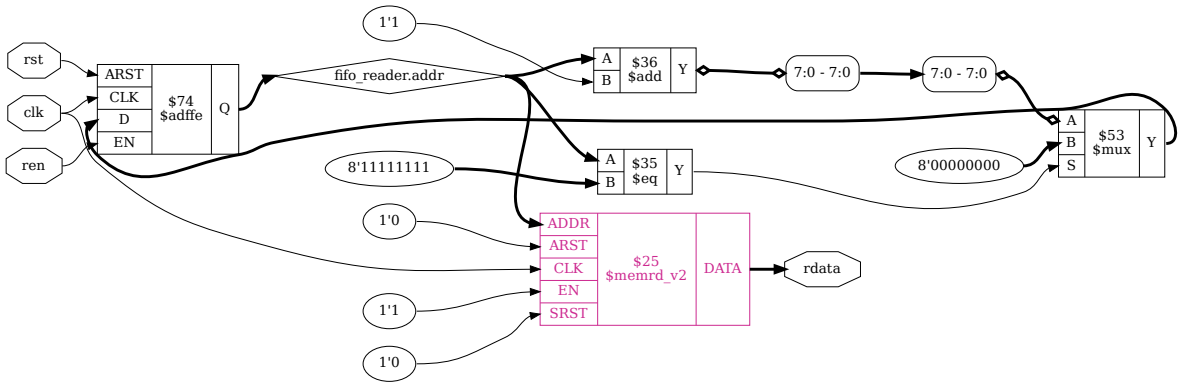

Fig. 2.8: `rdata` output after *memory_dff*

Part 3

The third part of the *synth_ice40* flow is a series of commands for mapping to DSPs. By default, the iCE40 flow will not map to the hardware DSP blocks and will only be performed if called with the `-dsp` flag: `synth_ice40 -dsp`. While our example has nothing that could be mapped to DSPs we can still take a quick look at the commands here and describe what they do.

Listing 2.13: `coarse` section (part 3)

```
wreduce t:$mul
techmap -map +/mul2dsp.v -map +/ice40/dsp_map.v -D DSP_A_MAXWIDTH=16 -D DSP_B_
↪MAXWIDTH=16 -D DSP_A_MINWIDTH=2 -D DSP_B_MINWIDTH=2 -D DSP_Y_MINWIDTH=11 -D DSP_NAME=$_
↪_MUL16X16    (if -dsp)
select a:mul2dsp                    (if -dsp)
setattr -unset mul2dsp              (if -dsp)
opt_expr -fine                      (if -dsp)
wreduce                             (if -dsp)
select -clear                       (if -dsp)
ice40_dsp                           (if -dsp)
chtype -set $mul t:$__soft_mul      (if -dsp)
```

`wreduce t:$mul` performs width reduction again, this time targetting only cells of type *$mul*. `techmap -map +/mul2dsp.v -map +/ice40/dsp_map.v ... -D DSP_NAME=$__MUL16X16` uses *techmap* to map *$mul* cells to `$__MUL16X16` which are, in turn, mapped to the iCE40 `SB_MAC16`. Any multipliers which aren't compatible with conversion to `$__MUL16X16` are relabelled to `$__soft_mul` before *chtype* changes them back to *$mul*.

During the mul2dsp conversion, some of the intermediate signals are marked with the attribute `mul2dsp`. By calling `select a:mul2dsp` we restrict the following commands to only operate on the cells and wires used for these signals. *setattr* removes the now unnecessary `mul2dsp` attribute. *opt_expr* we've already come across for const folding and simple expression rewriting, the `-fine` option just enables more fine-grain optimizations. Then we perform width reduction a final time and clear the selection.

Todo

`ice40_dsp` is pmgen

Finally we have *ice40_dsp*: similar to the *memory_dff* command we saw in the previous section, this merges any surrounding registers into the SB_MAC16 cell. This includes not just the input/output registers, but also pipeline registers and even a post-adder where applicable: turning a multiply + add into a single multiply-accumulate.

See also

Advanced usage docs for *Technology mapping*

Part 4

That brings us to the fourth and final part for the iCE40 synthesis flow:

Listing 2.14: `coarse` section (part 4)

```
alumacc
opt
memory -nomap [-no-rw-check]
opt_clean
```

Where before each type of arithmetic operation had its own cell, e.g. *$add*, we now want to extract these into *$alu* and *$macc_v2* cells which can help identify opportunities for reusing logic. We do this by running *alumacc*, which we can see produce the following changes in our example design:

Listing 2.15: output of *alumacc*

```
yosys> alumacc

24. Executing ALUMACC pass (create $alu and $macc cells).
Extracting $alu and $macc cells in module fifo:
  creating $macc model for $add$fifo.v:66$29 ($add).
  creating $macc model for $flatten\fifo_reader.$add$fifo.v:19$36 ($add).
  creating $macc model for $flatten\fifo_writer.$add$fifo.v:19$36 ($add).
  creating $macc model for $sub$fifo.v:68$32 ($sub).
  creating $alu model for $macc $sub$fifo.v:68$32.
  creating $alu model for $macc $flatten\fifo_writer.$add$fifo.v:19$36.
  creating $alu model for $macc $flatten\fifo_reader.$add$fifo.v:19$36.
  creating $alu model for $macc $add$fifo.v:66$29.
  creating $alu cell for $add$fifo.v:66$29: $auto$alumacc.cc:495:replace_alu$87
  creating $alu cell for $flatten\fifo_reader.$add$fifo.v:19$36: $auto$alumacc.
↪cc:495:replace_alu$90
  creating $alu cell for $flatten\fifo_writer.$add$fifo.v:19$36: $auto$alumacc.
↪cc:495:replace_alu$93
  creating $alu cell for $sub$fifo.v:68$32: $auto$alumacc.cc:495:replace_alu$96
  created 4 $alu and 0 $macc cells.
```

Once these cells have been inserted, the call to *opt* can combine cells which are now identical but may have been missed due to e.g. the difference between *$add* and *$sub*.

The other new command in this part is *memory - translate memories to basic cells*. *memory* is another macro command which we examine in more detail in *Memory handling*. For this document, let us focus just on the step most relevant to our example: *memory_collect*. Up until this point, our memory reads and our memory writes have been totally disjoint cells; operating on the same memory only in the abstract. *memory_collect* combines all of the reads and writes for a memory block into a single cell.

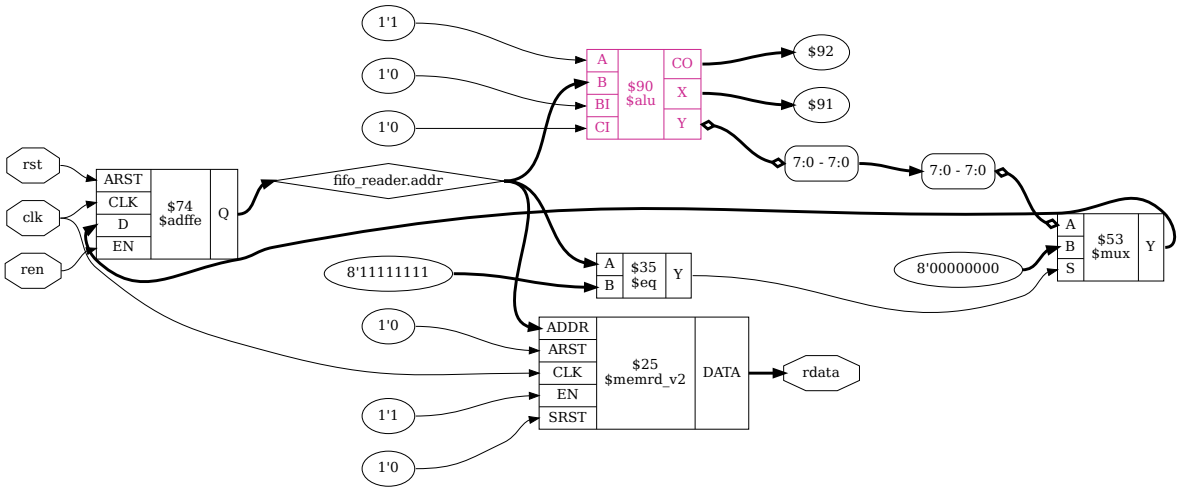

Fig. 2.9: `rdata` output after *alumacc*

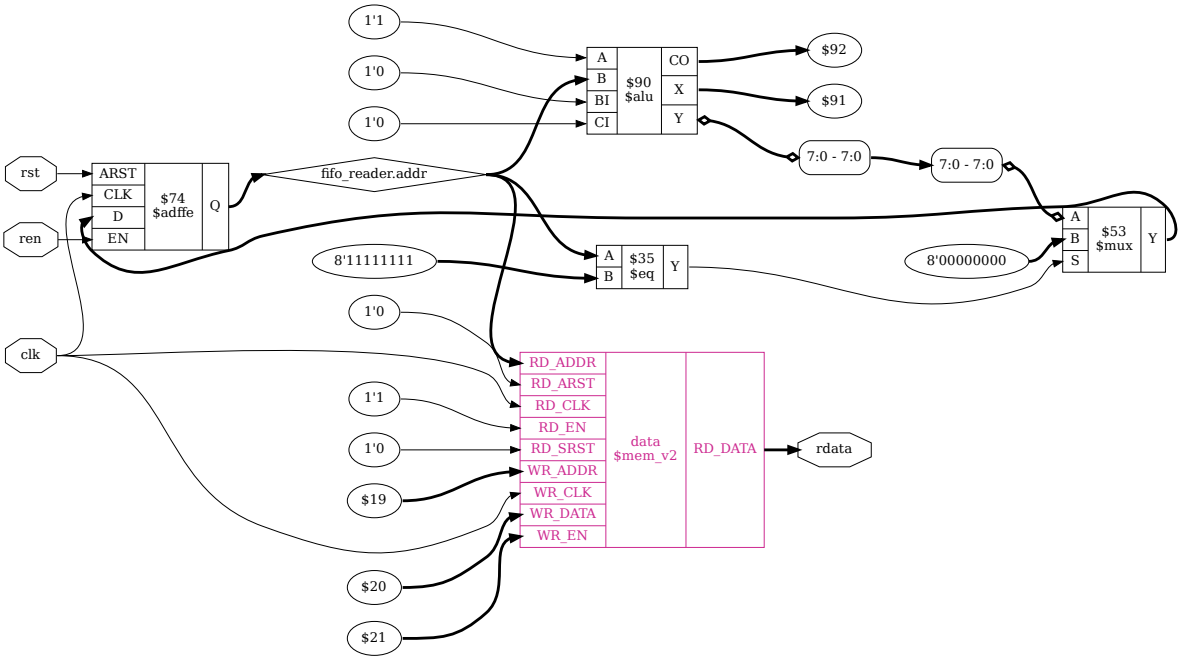

Fig. 2.10: `rdata` output after *memory_collect*

Looking at the schematic after running *memory_collect* we see that our *$memrd_v2* cell has been replaced with a *$mem_v2* cell named `data`, the same name that we used in *fifo.v*. Where before we had a single set of signals for address and enable, we now have one set for reading (`RD_*`) and one for writing (`WR_*`), as well as both `WR_DATA` input and `RD_DATA` output.

See also

Advanced usage docs for

- *Optimization passes*
- *Memory handling*

Final note

Having now reached the end of the the coarse-grain representation, we could also have gotten here by running `synth_ice40 -top fifo -run :map_ram` after loading the design. The `-run <from_label>:<to_label>` option with an empty `<from_label>` starts from the *begin section*, while the `<to_label>` runs up to but including the *map_ram section*.

2.2.6 Hardware mapping

The remaining sections each map a different type of hardware and are much more architecture dependent than the previous sections. As such we will only be looking at each section very briefly.

If you skipped calling `read_verilog -D ICE40_HX -lib -specify +/ice40/cells_sim.v` earlier, do it now.

Memory blocks

Mapping to hard memory blocks uses a combination of *memory_libmap* and *techmap*.

Listing 2.16: `map_ram` section

```
memory_libmap -lib +/ice40/brams.txt -lib +/ice40/spram.txt [-no-auto-huge] [-no-auto-
↪block]    (-no-auto-huge unless -spram, -no-auto-block if -nobram)
techmap -map +/ice40/brams_map.v -map +/ice40/spram_map.v
ice40_braminit
```

The *map_ram section* converts the generic *$mem_v2* into the iCE40 `SB_RAM40_4K` (highlighted). We can also see the memory address has been remapped, and the data bits have been reordered (or swizzled). There is also now a *$mux* cell controlling the value of `rdata`. In *fifo.v* we wrote our memory as read-before-write, however the `SB_RAM40_4K` has undefined behaviour when reading from and writing to the same address in the same cycle. As a result, extra logic is added so that the generated circuit matches the behaviour of the verilog. *Synchronous SDP with undefined collision behavior* describes how we could change our verilog to match our hardware instead.

If we run *memory_libmap* under the *debug* command we can see candidates which were identified for mapping, along with the costs of each and what logic requires emulation.

```
yosys> debug memory_libmap -lib +/ice40/brams.txt -lib +/ice40/spram.txt -no-auto-huge
4. Executing MEMORY_LIBMAP pass (mapping memories to cells).
Memory fifo.data mapping candidates (post-geometry):
- logic fallback
  - cost: 2048.000000
```

(continues on next page)

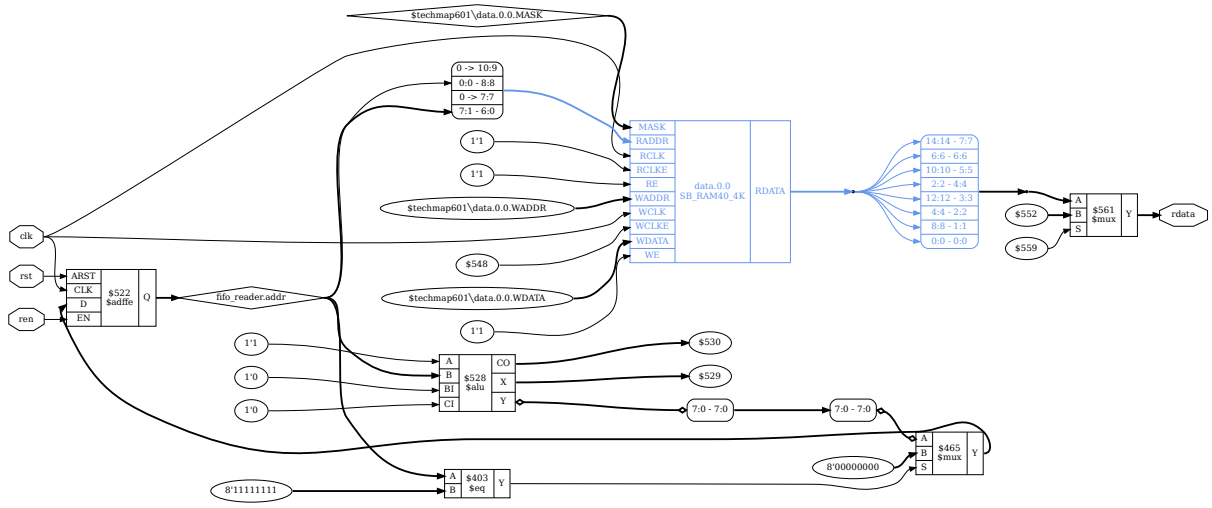

Fig. 2.11: `rdata` output after *map_ram section*

(continued from previous page)

```
- $__ICE40_RAM4K_:
  - option HAS_BE 0
  - emulation score: 7
  - replicates (for ports): 1
  - replicates (for data): 1
  - mux score: 0
  - demux score: 0
  - cost: 78.000000
  - abits 11 dbits 2 4 8 16
  - chosen base width 8
  - swizzle 0 1 2 3 4 5 6 7
  - emulate read-first behavior
  - write port 0: port group W
    - widths 2 4 8
  - read port 0: port group R
    - widths 2 4 8 16
    - emulate transparency with write port 0
- $__ICE40_RAM4K_:
  - option HAS_BE 1
  - emulation score: 7
  - replicates (for ports): 1
  - replicates (for data): 1
  - mux score: 0
  - demux score: 0
  - cost: 78.000000
  - abits 11 dbits 2 4 8 16
  - byte width 1
  - chosen base width 8
  - swizzle 0 1 2 3 4 5 6 7
  - emulate read-first behavior
  - write port 0: port group W
```

(continues on next page)

(continued from previous page)

```
    - widths 16
  - read port 0: port group R
    - widths 2 4 8 16
    - emulate transparency with write port 0
Memory fifo.data mapping candidates (after post-geometry prune):
- logic fallback
  - cost: 2048.000000
- $__ICE40_RAM4K_:
  - option HAS_BE 0
  - emulation score: 7
  - replicates (for ports): 1
  - replicates (for data): 1
  - mux score: 0
  - demux score: 0
  - cost: 78.000000
  - abits 11 dbits 2 4 8 16
  - chosen base width 8
  - swizzle 0 1 2 3 4 5 6 7
  - emulate read-first behavior
  - write port 0: port group W
    - widths 2 4 8
  - read port 0: port group R
    - widths 2 4 8 16
    - emulate transparency with write port 0
mapping memory fifo.data via $__ICE40_RAM4K_
```

The `$__ICE40_RAM4K_` cell is defined in the file `techlibs/ice40/brams.txt`, with the mapping to `SB_RAM40_4K` done by *techmap* using `techlibs/ice40/brams_map.v`. Any leftover memory cells are then converted into flip flops (the `logic fallback`) with *memory_map*.

Listing 2.17: `map_ffram` section

```
opt -fast -mux_undef -undriven -fine
memory_map
opt -undriven -fine
```

Note

The visual clutter on the `RDATA` output port (highlighted) is an unfortunate side effect of *opt_clean* on the swizzled data bits. In connecting the *$mux* input port directly to `RDATA` to reduce the number of wires, the `$techmap579\data.0.0.RDATA` wire becomes more visually complex.

See also

Advanced usage docs for

- *Technology mapping*
- *Memory handling*

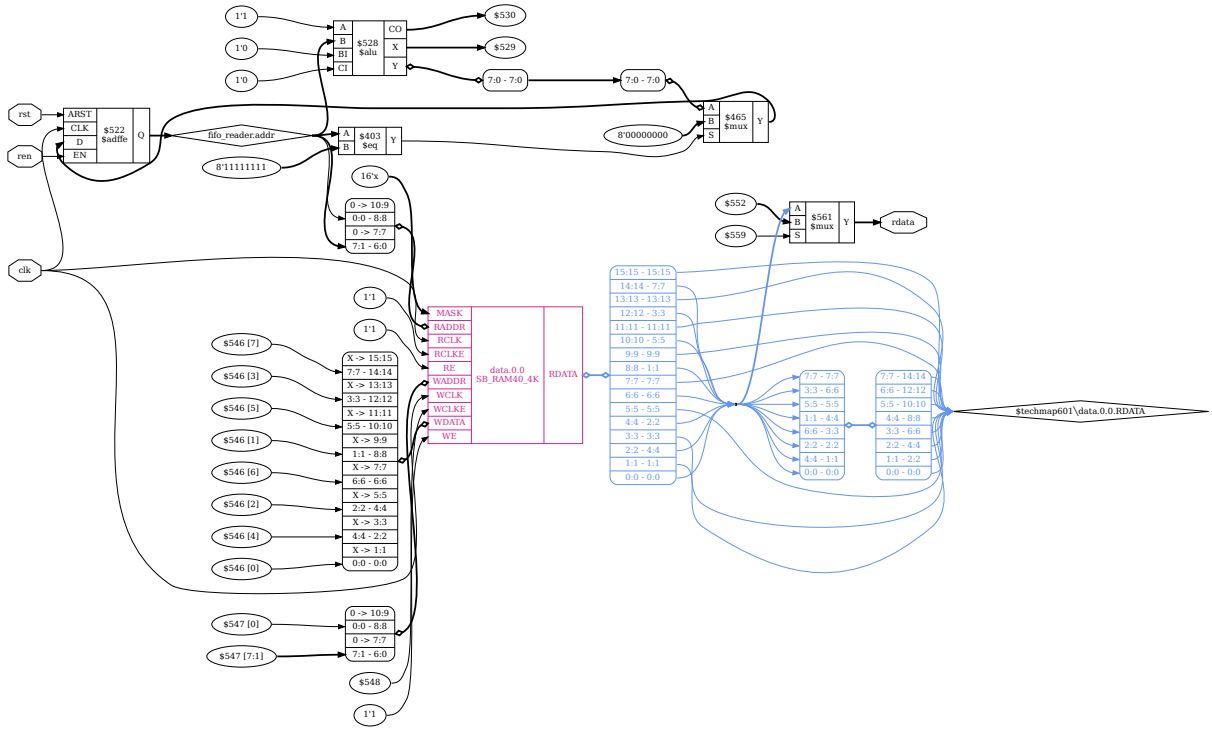

Fig. 2.12: `rdata` output after *map_ffram section*

Arithmetic

Uses *techmap* to map basic arithmetic logic to hardware. This sees somewhat of an explosion in cells as multi-bit *$mux* and *$adffe* are replaced with single-bit *$_MUX_* and *$_DFFE_PPOP_* cells, while the *$alu* is replaced with primitive *$_OR_* and *$_NOT_* gates and a *$lut* cell.

Listing 2.18: `map_gates` section

```
ice40_wrapcarry
techmap -map +/techmap.v -map +/ice40/arith_map.v
opt -fast
abc -dff -D 1    (only if -retime)
ice40_opt
```

See also

Advanced usage docs for *Technology mapping*

Flip-flops

Convert FFs to the types supported in hardware with *dfflegalize*, and then use *techmap* to map them. In our example, this converts the *$_DFFE_PPOP_* cells to `SB_DFFER`.

We also run *simplemap* here to convert any remaining cells which could not be mapped to hardware into gate-level primitives. This includes optimizing *$_MUX_* cells where one of the inputs is a constant `1'0`, replacing it instead with an *$_AND_* cell.

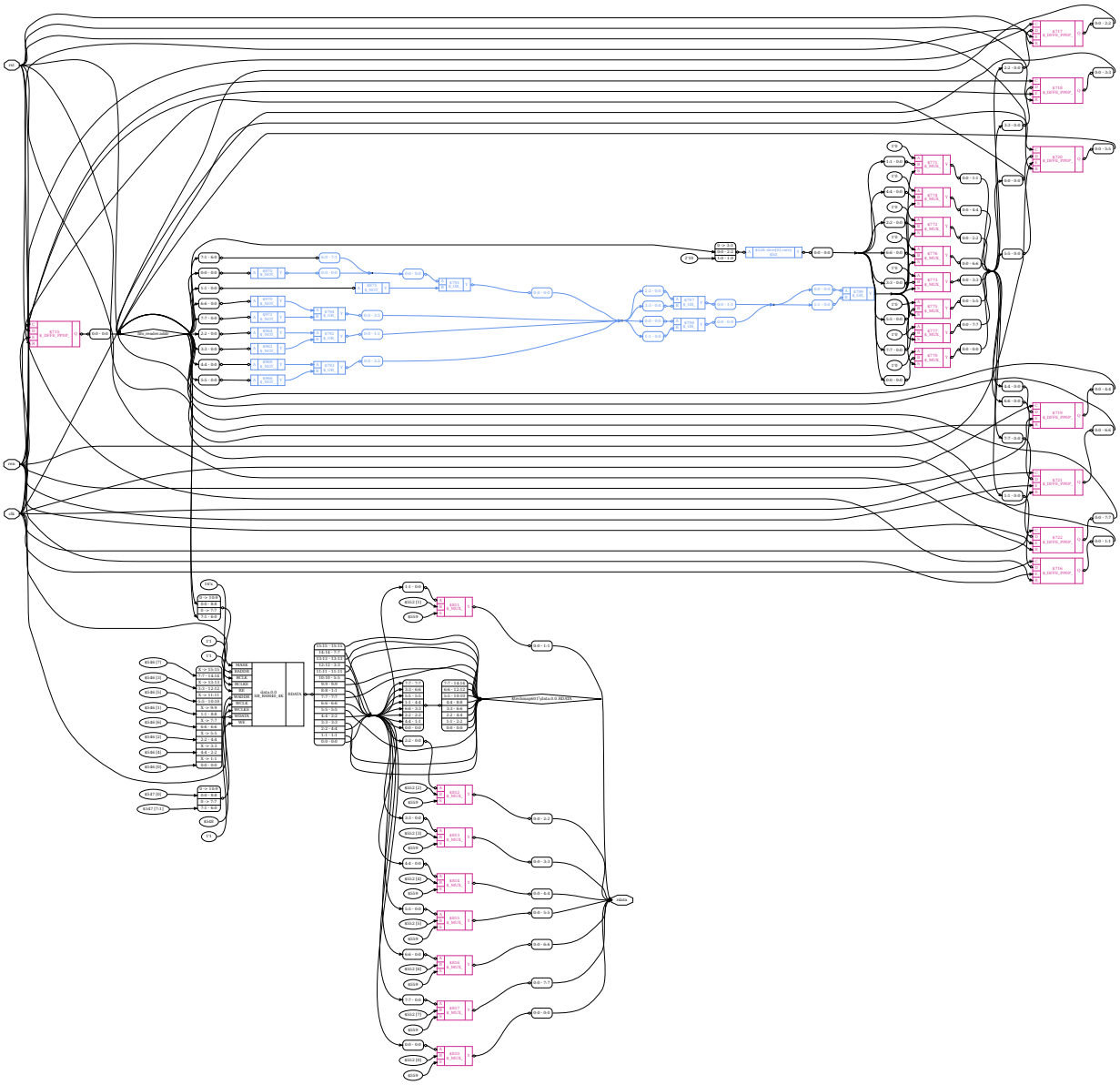

Fig. 2.13: `rdata` output after *map_gates section*

Listing 2.19: `map_ffs` section

```
dfflegalize -cell $_DFF_?_ 0 -cell $_DFFE_?P_ 0 -cell $_DFF_?P?_ 0 -cell $_DFFE_?P?P_ 0 -
↪cell $_SDFF_?P?_ 0 -cell $_SDFFCE_?P?P_ 0 -cell $_DLATCH_?_ x -mince -1
techmap -map +/ice40/ff_map.v
opt_expr -mux_undef
simplemap
ice40_opt -full
```

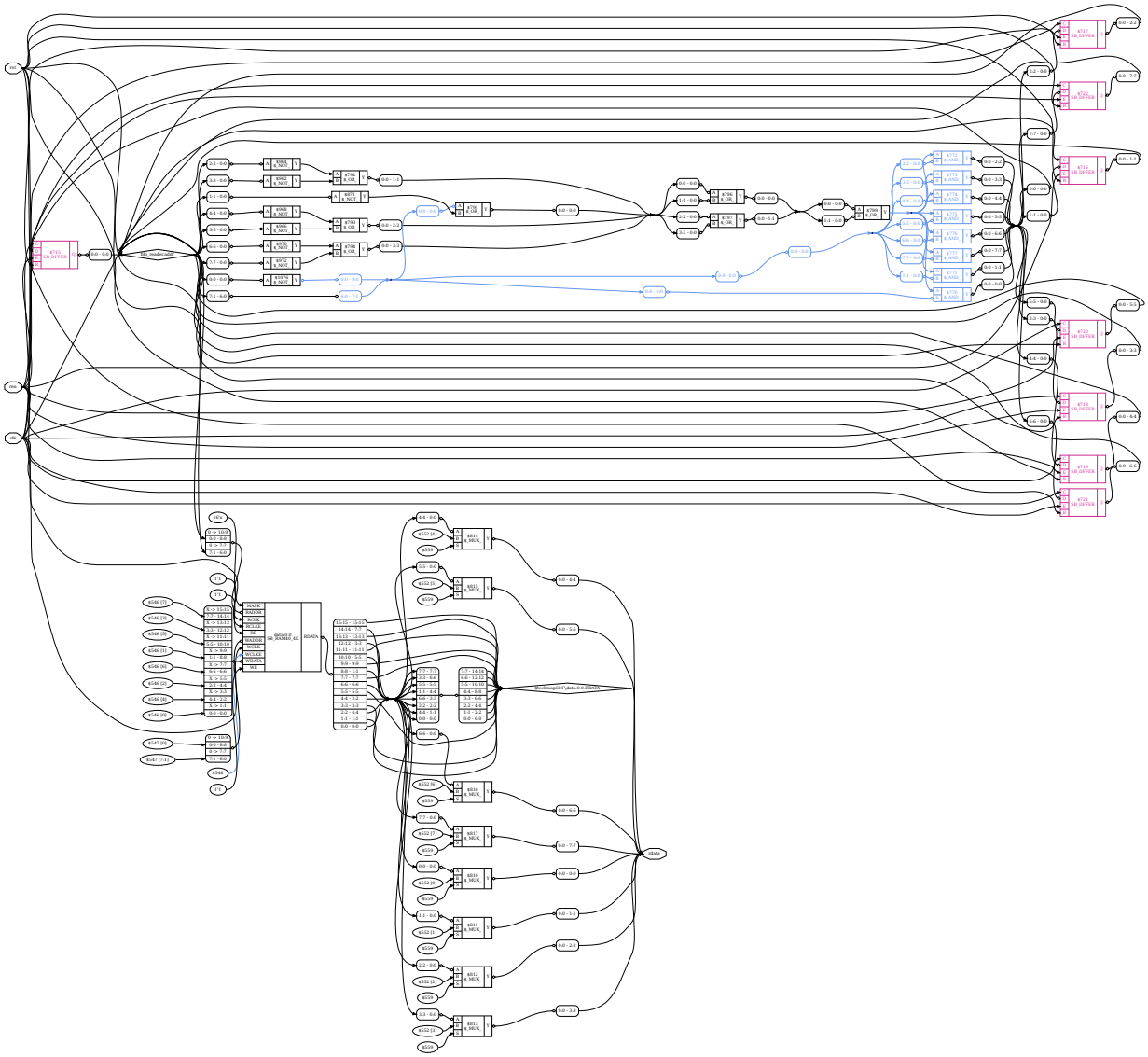

Fig. 2.14: `rdata` output after *map_ffs section*

See also

Advanced usage docs for *Technology mapping*

LUTs

abc and *techmap* are used to map LUTs; converting primitive cell types to use *$lut* and SB_CARRY cells. Note that the iCE40 flow uses *abc9* rather than *abc*. For more on what these do, and what the difference between these two commands are, refer to *The ABC toolbox*.

Listing 2.20: map_luts section

```
abc          (only if -abc2)
ice40_opt    (only if -abc2)
techmap -map +/ice40/latches_map.v
simplemap                                    (if -noabc or -flowmap)
techmap -map +/gate2lut.v -D LUT_WIDTH=4     (only if -noabc)
flowmap -maxlut 4    (only if -flowmap)
read_verilog -D ICE40_HX -icells -lib -specify +/ice40/abc9_model.v
abc9  -W 250
ice40_wrapcarry -unwrap
techmap -map +/ice40/ff_map.v
clean
opt_lut -tech ice40
```

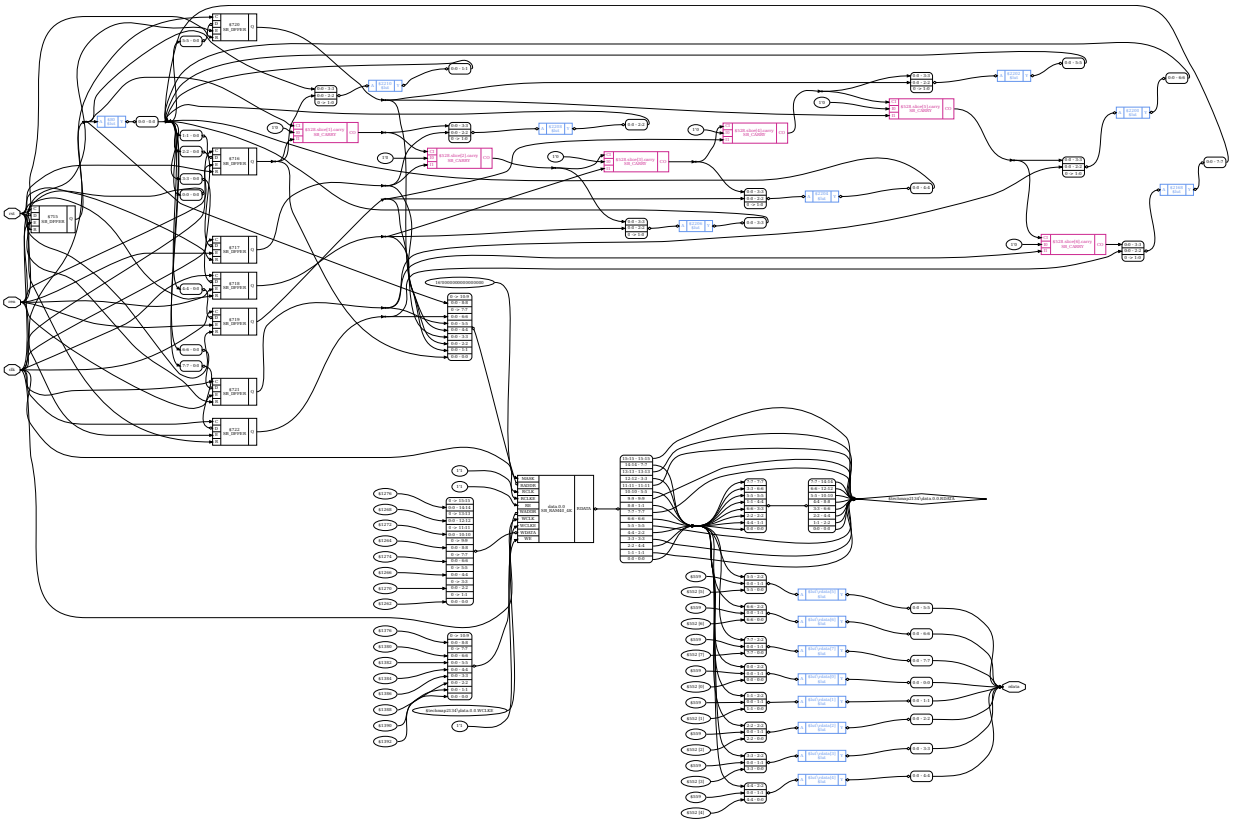

Fig. 2.15: rdata output after *map_luts section*

Finally we use *techmap* to map the generic *$lut* cells to iCE40 SB_LUT4 cells.

Listing 2.21: `map_cells` section

```
techmap -map +/ice40/cells_map.v    (skip if -vpr)
clean
```

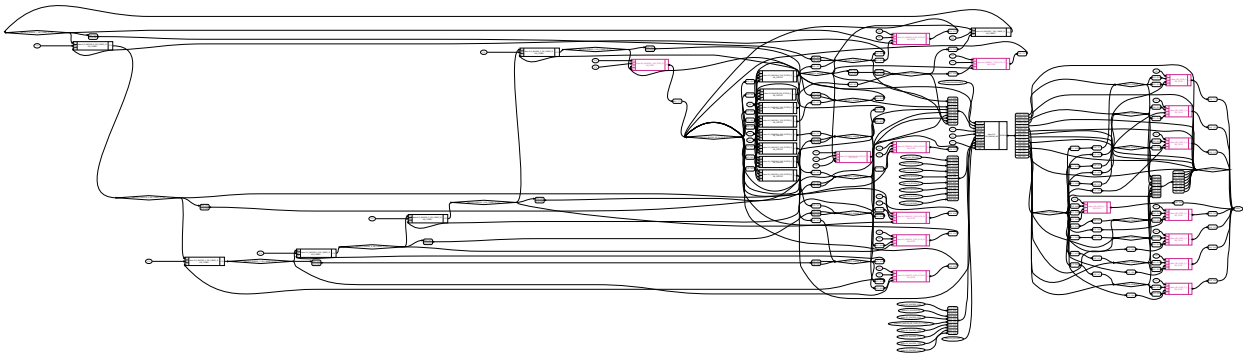

Fig. 2.16: `rdata` output after *map_cells section*

See also

Advanced usage docs for

- *Technology mapping*
- *The ABC toolbox*

Other cells

The following commands may also be used for mapping other cells:

hilomap
: Some architectures require special driver cells for driving a constant hi or lo value. This command replaces simple constants with instances of such driver cells.

iopadmap
: Top-level input/outputs must usually be implemented using special I/O-pad cells. This command inserts such cells to the design.

These commands tend to either be in the *map_cells section* or after the *check section* depending on the flow.

2.2.7 Final steps

The next section of the iCE40 synth flow performs some sanity checking and final tidy up:

Listing 2.22: `check` section

```
autoname
hierarchy -check
stat
check -noinit
blackbox =A:whitebox
```

The new commands here are:

- *autoname - automatically assign names to objects*,
- *stat - print some statistics*, and
- *blackbox - convert modules into blackbox modules*.

The output from *stat* is useful for checking resource utilization; providing a list of cells used in the design and the number of each, as well as the number of other resources used such as wires and processes. For this design, the final call to *stat* should look something like the following:

```
yosys> stat -top fifo

17. Printing statistics.

=== fifo ===

   Number of wires:                 95
   Number of wire bits:            262
   Number of public wires:          95
   Number of public wire bits:     262
   Number of ports:                  7
   Number of port bits:             29
   Number of memories:               0
   Number of memory bits:            0
   Number of processes:              0
   Number of cells:                138
     $scopeinfo                      2
     SB_CARRY                       26
     SB_DFF                         26
     SB_DFFER                       25
     SB_LUT4                        58
     SB_RAM40_4K                     1
```

Note that the `-top fifo` here is optional. *stat* will automatically use the module with the `top` attribute set, which `fifo` was when we called *hierarchy*. If no module is marked `top`, then stats will be shown for each module selected.

The *stat* output is also useful as a kind of sanity-check: Since we have already run *proc*, we wouldn't expect there to be any processes. We also expect `data` to use hard memory; if instead of an `SB_RAM40_4K` saw a high number of flip-flops being used we might suspect something was wrong.

If we instead called *stat* immediately after `read_verilog fifo.v` we would see something very different:

```
yosys> stat

2. Printing statistics.

=== fifo ===

   Number of wires:                 28
   Number of wire bits:            219
   Number of public wires:           9
   Number of public wire bits:      45
   Number of ports:                  7
   Number of port bits:             29
   Number of memories:               1
```

(continues on next page)

(continued from previous page)

```
   Number of memory bits:         2048
   Number of processes:              3
   Number of cells:                  9
     $add                            1
     $logic_and                      2
     $logic_not                      2
     $memrd                          1
     $sub                            1
     addr_gen                        2

=== addr_gen ===

   Number of wires:                  8
   Number of wire bits:             60
   Number of public wires:           4
   Number of public wire bits:      11
   Number of ports:                  4
   Number of port bits:             11
   Number of memories:               0
   Number of memory bits:            0
   Number of processes:              2
   Number of cells:                  2
     $add                            1
     $eq                             1
```

Notice how `fifo` and `addr_gen` are listed separately, and the statistics for `fifo` show 2 `addr_gen` modules. Because this is before the memory has been mapped, we also see that there is 1 memory with 2048 memory bits; matching our 8-bit wide `data` memory with 256 values ($8 * 256 = 2048$).

Synthesis output

The iCE40 synthesis flow has the following output modes available:

- *write_blif - write design to BLIF file*,
- *write_edif - write design to EDIF netlist file*, and
- *write_json - write design to a JSON file*.

As an example, if we called `synth_ice40 -top fifo -json fifo.json`, our synthesized `fifo` design will be output as `fifo.json`. We can then read the design back into Yosys with *read_json*, but make sure you use `design -reset` or open a new interactive terminal first. The JSON output we get can also be loaded into nextpnr to do place and route; but that is beyond the scope of this documentation.

See also

synth_ice40 - synthesis for iCE40 FPGAs

2.3 Scripting in Yosys

On the previous page we went through a synthesis script, running each command in the interactive Yosys shell. On this page, we will be introducing the script file format and how you can make your own synthesis scripts.

Yosys script files typically use the `.ys` extension and contain a set of commands for Yosys to run sequentially. These commands are the same ones we were using on the previous page like *read_verilog* and *hierarchy*.

2.3.1 Script parsing

As with the interactive shell, each command consists of the command name, and an optional whitespace separated list of arguments. Commands are terminated with the newline character, and anything after a hash sign `#` is a comment (i.e. it is ignored).

It is also possible to terminate commands with a semicolon `;`. This is particularly useful in conjunction with the `-p <command>` command line option, where `<command>` can be a string with multiple commands separated by semicolon. In-line comments can also be made with the colon `:`, where the end of the comment is a semicolon `;` or a new line.

Listing 2.23: Using the `-p` option

```
$ yosys -p "read_verilog fifo.v; :this is a comment; prep"
```

Warning

The space after the semicolon is required for correct parsing. `log a;log b;` for example will display `a;log b` instead of `a` and `b` as might be expected.

Another special character that can be used in Yosys scripts is the bang `!`. Anything after the bang will be executed as a shell command. This can only be terminated with a new line. Any semicolons, hashes, or other special characters will be passed to the shell. If an error code is returned from the shell it will be raised by Yosys. *exec* provides a much more flexible way of executing commands, allowing the output to be logged and more control over when to generate errors.

2.3.2 The synthesis starter script

All of the images and console output used in *Synthesis starter* were generated by Yosys, using Yosys script files found in `docs/source/code_examples/fifo`. If you haven't already, let's take a look at some of those script files now.

Listing 2.24: A section of `fifo.ys`, generating the images used for *The addr_gen module*

```
10 echo on
11 hierarchy -top addr_gen
12 select -module addr_gen
13 select -list
14 select t:*
15 select -list
16 select -set new_cells %
17 select -clear
18 show -format dot -prefix addr_gen_show addr_gen
19 show -format dot -prefix new_cells_show -notitle @new_cells
20 show -color maroon3 @new_cells -color cornflowerblue p:* -notitle -format dot -prefix␣
   ↪addr_gen_hier
21
22 # ======================================================
23 proc -noopt
```

(continues on next page)

(continued from previous page)

```
select -set new_cells t:$mux t:*dff
show -color maroon3 @new_cells -notitle -format dot -prefix addr_gen_proc

# =========================================================
opt_expr; clean
select -set new_cells t:$eq
show -color cornflowerblue @new_cells -notitle -format dot -prefix addr_gen_clean

# =========================================================
```

The first command there, `echo on`, uses *echo* to enable command echoes on. This is how we generated the code listing for *hierarchy -top addr_gen output*. Turning command echoes on prints the `yosys> hierarchy -top addr_gen` line, making the output look the same as if it were an interactive terminal. `hierarchy -top addr_gen` is of course the command we were demonstrating, including the output text and an image of the design schematic after running it.

We briefly touched on *select* when it came up in *synth_ice40*, but let's look at it more now.

Selections intro

The *select* command is used to modify and view the list of selected objects:

```
yosys> select -module addr_gen

yosys [addr_gen]> select -list
addr_gen
addr_gen/$1\addr[7:0]
addr_gen/$add$fifo.v:19$3_Y
addr_gen/$eq$fifo.v:16$2_Y
addr_gen/$0\addr[7:0]
addr_gen/addr
addr_gen/rst
addr_gen/clk
addr_gen/en
addr_gen/$add$fifo.v:19$3
addr_gen/$eq$fifo.v:16$2
addr_gen/$proc$fifo.v:0$4
addr_gen/$proc$fifo.v:12$1

yosys [addr_gen]> select t:*

yosys [addr_gen]*> select -list
addr_gen/$add$fifo.v:19$3
addr_gen/$eq$fifo.v:16$2

yosys [addr_gen]*> select -set new_cells %

yosys [addr_gen]*> select -clear
```

When we call `select -module addr_gen` we are changing the currently active selection from the whole design, to just the `addr_gen` module. Notice how this changes the `yosys` at the start of each command to `yosys [addr_gen]`? This indicates that any commands we run at this point will *only* operate on the `addr_gen` module. When we then call `select -list` we get a list of all objects in the `addr_gen` module, including the module itself, as well as all of the wires, inputs, outputs, processes, and cells.

Next we perform another selection, `select t:*`. The `t:` part signifies we are matching on the *cell type*, and the `*` means to match anything. For this (very simple) selection, we are trying to find all of the cells, regardless of their type. The active selection is now shown as `[addr_gen]*`, indicating some sub-selection of the `addr_gen` module. This gives us the *`$add`* and *`$eq`* cells, which we want to highlight for the *addr_gen module after hierarchy* image.

We can assign a name to a selection with `select -set`. In our case we are using the name `new_cells`, and telling it to use the current selection, indicated by the `%` symbol. We can then use this named selection by referring to it as `@new_cells`, which we will see later. Then we clear the selection so that the following commands can operate on the full design. While we split that out for this document, we could have done the same thing in a single line by calling `select -set new_cells addr_gen/t:*`. If we know we only have the one module in our design, we can even skip the `addr_gen/` part. Looking further down *the fifo.ys code* we can see this with `select -set new_cells t:$mux t:*dff`. We can also see in that command that selections don't have to be limited to a single statement.

Many commands also support an optional `[selection]` argument which can be used to override the currently selected objects. We could, for example, call `clean addr_gen` to have *`clean`* operate on *just* the `addr_gen` module.

Detailed documentation of the select framework can be found under *Selections* or in the command reference at *select - modify and view the list of selected objects*.

Displaying schematics

While the *`select`* command is very useful, sometimes nothing beats being able to see a design for yourself. This is where *`show`* comes in. Note that this document is just an introduction to the *`show`* command, only covering the basics. For more information, including a guide on what the different symbols represent, see *A look at the show command* and the *Interactive design investigation* page.

> **Note**
>
> The *`show`* command requires a working installation of GraphViz and xdot for displaying the actual circuit diagrams.

This is the first `show` command we called in `fifo.ys`, *as we saw above*. If we look at the log output for this image we see the following:

```
yosys> show -format dot -prefix addr_gen_show addr_gen

4. Generating Graphviz representation of design.
Writing dot description to `addr_gen_show.dot'.
Dumping module addr_gen to page 1.
```

Calling *`show`* with `-format dot` tells it we want to output a `.dot` file rather than opening it for display. The `-prefix addr_gen_show` option indicates we want the file to be called `addr_gen_show.*`. Remember, we do this in `fifo.ys` because we need to store the image for displaying in the documentation you're reading. But if you just want to display the images locally you can skip these two options. The `-format` option internally calls the `dot` command line program from GraphViz to convert to formats other than `.dot`. Check GraphViz output docs for more on available formats.

> **Note**
>
> If you are using a POSIX based version of Yosys (such as for Mac or Linux), xdot will be opened in the background and Yosys can continue to be used. If it it still open, future calls to `show` will use the same

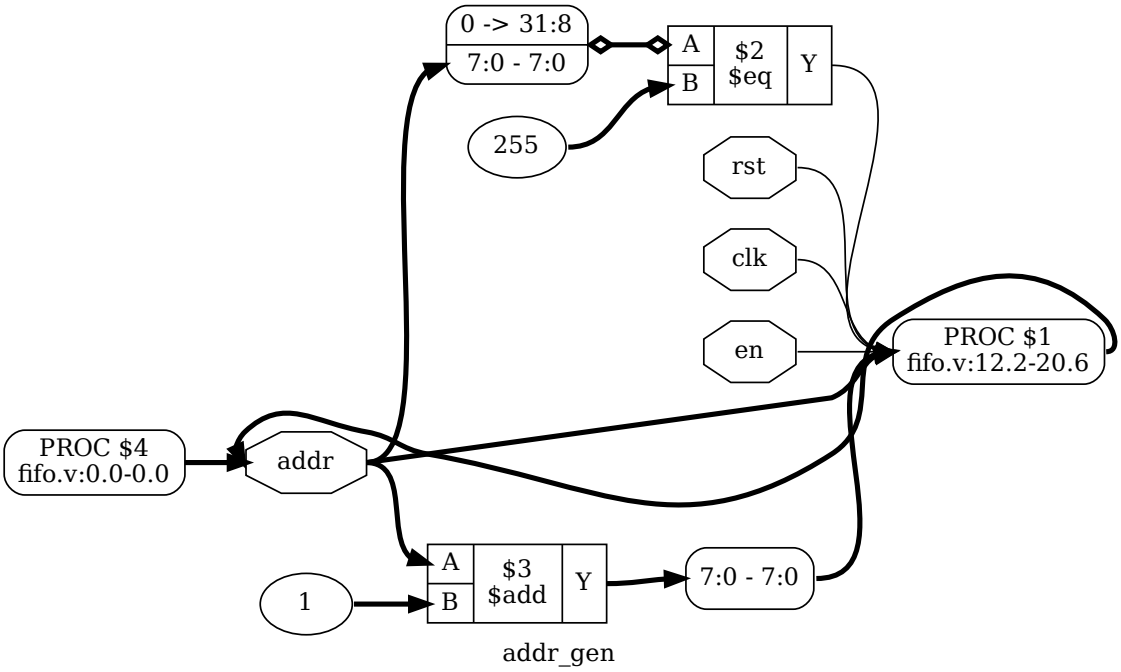

Fig. 2.17: Calling `show addr_gen` after *hierarchy*

xdot instance.

The `addr_gen` at the end tells it we only want the `addr_gen` module, just like when we called `select -module addr_gen` in *Selections intro*. That last parameter doesn't have to be a module name, it can be any valid selection string. Remember when we *assigned a name to a selection* and called it `new_cells`? We saw in the `select -list` output that it contained two cells, an *`$add`* and an *`$eq`*. We can call *`show`* on that selection just as easily:

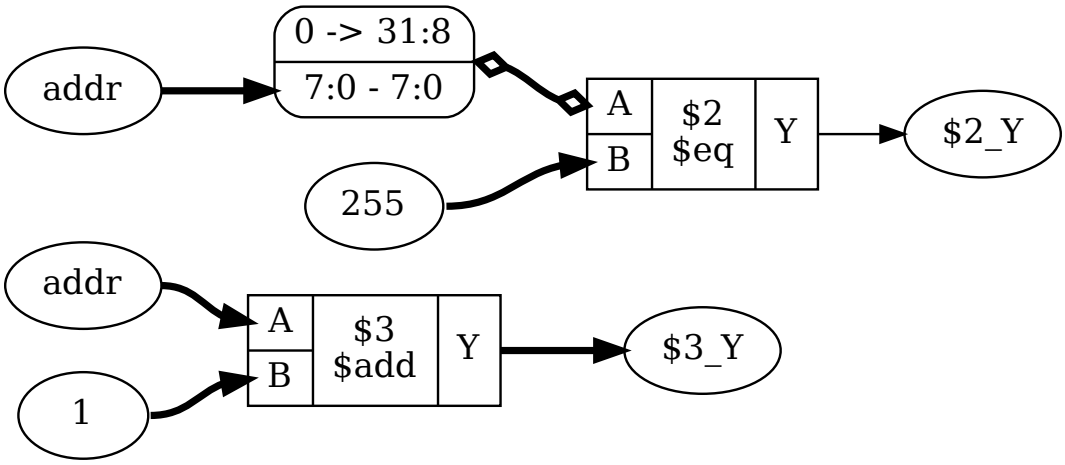

Fig. 2.18: Calling `show -notitle @new_cells`

We could have gotten the same output with `show -notitle t:$add t:$eq` if we didn't have the named selection. By adding the `-notitle` flag there we can also get rid of the `addr_gen` title that would have been automatically added. The last two images were both added for this introduction. The next image is the first one we saw in *Synthesis starter*: showing the full `addr_gen` module while also highlighting `@new_cells` and the two `PROC` blocks. To achieve this highlight, we make use of the `-color` option:

As described in the the *`help`* output for *`show`* (or by clicking on the *`show`* link), colors are specified as `-color <color> <object>`. Color names for the `<color>` portion can be found on the GraphViz color docs. Unlike the final *`show`* parameter which can have be any selection string, the `<object>` part must be a single selection expression or named selection. That means while we can use `@new_cells`, we couldn't use `t:$eq t:$add`. In general, if a command lists `[selection]` as its final parameter it can be any selection string. Any selections that are not the final parameter, such as those used in options, must be a single expression instead.

For all of the options available to *`show`*, check the command reference at *show - generate schematics using graphviz*.

See also

A look at the show command on the *Interactive design investigation* page.

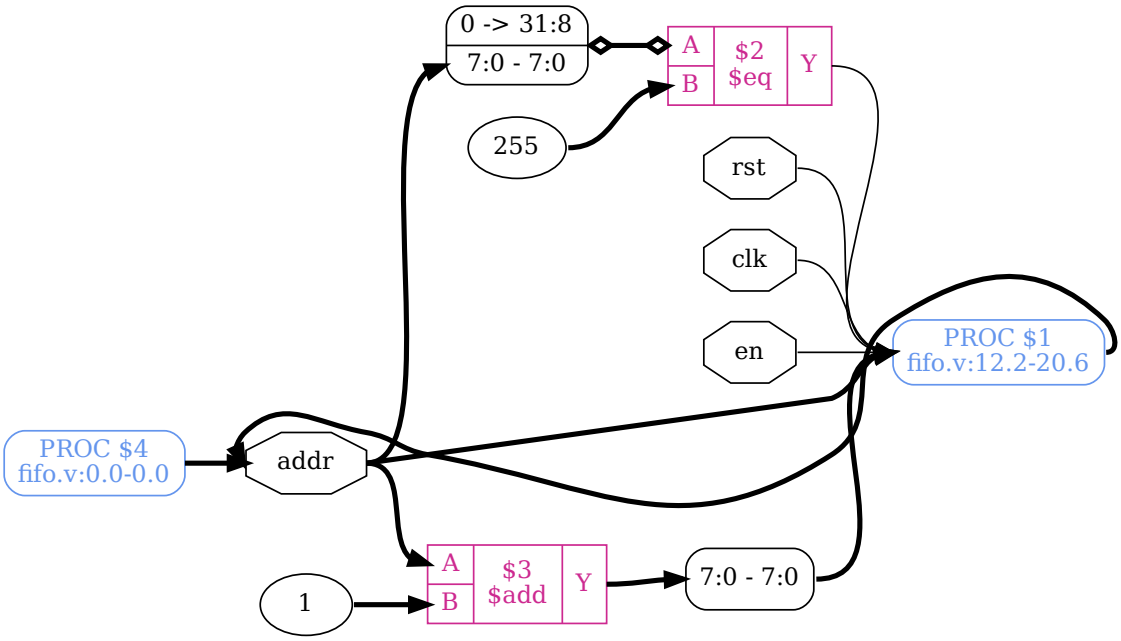

Fig. 2.19: Calling `show -color maroon3 @new_cells -color cornflowerblue p:* -notitle`

CHAPTER

THREE

USING YOSYS (ADVANCED)

While much of Yosys is focused around synthesis, there are also a number of other useful things that can be accomplished with Yosys scripts or in an interactive shell. As such this section is broken into two parts: *Synthesis in detail* expands on the *Synthesis starter* and goes into further detail on the major commands used in synthesis; *More scripting* covers the ways Yosys can interact with designs for a deeper investigation.

3.1 Synthesis in detail

Synthesis can generally be broken down into coarse-grain synthesis, and fine-grain synthesis. We saw this in *Synthesis starter* where a design was loaded and elaborated and then went through a series of coarse-grain optimizations before being mapped to hard blocks and fine-grain cells. Most commands in Yosys will target either coarse-grain representation or fine-grain representation, with only a select few compatible with both states.

Commands such as *proc*, *fsm*, and *memory* rely on the additional information in the coarse-grain representation, along with a number of optimizations such as *wreduce*, *share*, and *alumacc*. *opt* provides optimizations which are useful in both states, while *techmap* is used to convert coarse-grain cells to the corresponding fine-grain representation.

Single-bit cells (logic gates, FFs) as well as LUTs, half-adders, and full-adders make up the bulk of the fine-grain representation and are necessary for commands such as *abc*/*abc9*, *simplemap*, *dfflegalize*, and *memory_map*.

3.1.1 Synth commands

Todo

comment on common `synth_*` options, like `-run`

Packaged `synth_*` commands

The following is a list of all synth commands included in Yosys for different platforms. Each command runs a script of sub commands specific to the platform being targeted. Note that not all of these scripts are actively maintained and may not be up-to-date.

- *synth_achronix - synthesis for Achronix Speedster22i FPGAs.*
- *synth_anlogic - synthesis for Anlogic FPGAs*
- *synth_coolrunner2 - synthesis for Xilinx Coolrunner-II CPLDs*
- *synth_easic - synthesis for eASIC platform*
- *synth_ecp5 - synthesis for ECP5 FPGAs*

- *synth_efinix - synthesis for Efinix FPGAs*
- *synth_fabulous - FABulous synthesis script*
- *synth_gatemate - synthesis for Cologne Chip GateMate FPGAs*
- *synth_gowin - synthesis for Gowin FPGAs*
- *synth_greenpak4 - synthesis for GreenPAK4 FPGAs*
- *synth_ice40 - synthesis for iCE40 FPGAs*
- *synth_intel - synthesis for Intel (Altera) FPGAs.* (MAX10, Cyclone IV)
- *synth_intel_alm - synthesis for ALM-based Intel (Altera) FPGAs.* (Cyclone V, Arria V, Cyclone 10 GX)
- *synth_lattice - synthesis for Lattice FPGAs*
- *synth_nexus - synthesis for Lattice Nexus FPGAs*
- *synth_quicklogic - Synthesis for QuickLogic FPGAs*
- *synth_sf2 - synthesis for SmartFusion2 and IGLOO2 FPGAs*
- *synth_xilinx - synthesis for Xilinx FPGAs*

General synthesis

In addition to the above hardware-specific synth commands, there is also *prep - generic synthesis script*. This command is limited to coarse-grain synthesis, without getting into any architecture-specific mappings or optimizations. Among other things, this is useful for design verification.

The following commands are executed by the *prep* command:

```
begin:
    hierarchy -check [-top <top> | -auto-top]

coarse:
    proc [-ifx]
    flatten    (if -flatten)
    future
    opt_expr -keepdc
    opt_clean
    check
    opt -noff -keepdc
    wreduce -keepdc [-memx]
    memory_dff    (if -rdff)
    memory_memx    (if -memx)
    opt_clean
    memory_collect
    opt -noff -keepdc -fast

check:
    stat
    check
```

Synthesis starter covers most of these commands and what they do.

3.1.2 Converting process blocks

The Verilog frontend converts `always`-blocks to RTL netlists for the expressions and "processess" for the control- and memory elements. The *proc* command then transforms these "processess" to netlists of RTL multiplexer and register cells. It also is a macro command that calls the other `proc_*` commands in a sensible order:

Listing 3.1: Passes called by *proc*

```
proc_clean # removes empty branches and processes
proc_rmdead # removes unreachable branches
proc_prune
proc_init # special handling of "initial" blocks
proc_arst # identifies modeling of async resets
proc_rom
proc_mux # converts decision trees to multiplexer networks
proc_dlatch
proc_dff # extracts registers from processes
proc_memwr
proc_clean # this should remove all the processes, provided all went fine
opt_expr -keepdc
```

After all the `proc_*` commands, *opt_expr* is called. This can be disabled by calling `proc -noopt`. For more information about *proc*, such as disabling certain sub commands, see *proc - translate processes to netlists*.

Many commands can not operate on modules with "processess" in them. Usually a call to *proc* is the first command in the actual synthesis procedure after design elaboration.

Example

Todo

describe `proc` images

docs/source/code_examples/synth_flow.

Listing 3.2: `proc_01.v`

```
module test(input D, C, R, output reg Q);
    always @(posedge C, posedge R)
        if (R)
            Q <= 0;
        else
            Q <= D;
endmodule
```

Listing 3.3: `proc_01.ys`

```
read_verilog proc_01.v
hierarchy -check -top test
proc;;
```

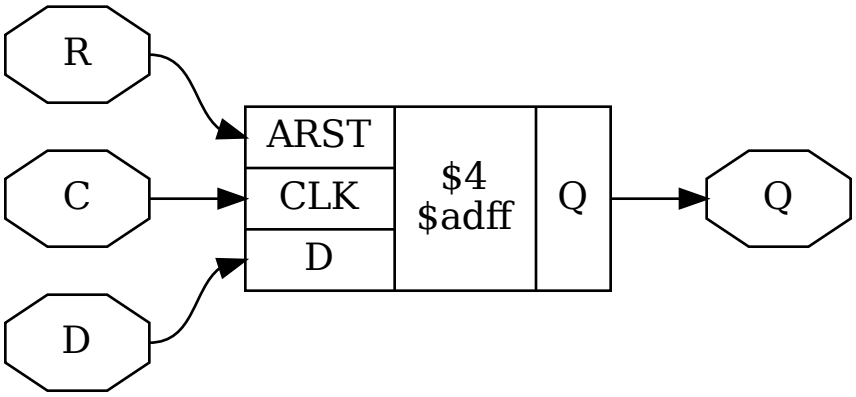
R
C
D
ARST
CLK
D
$4
$adff
Q
Q

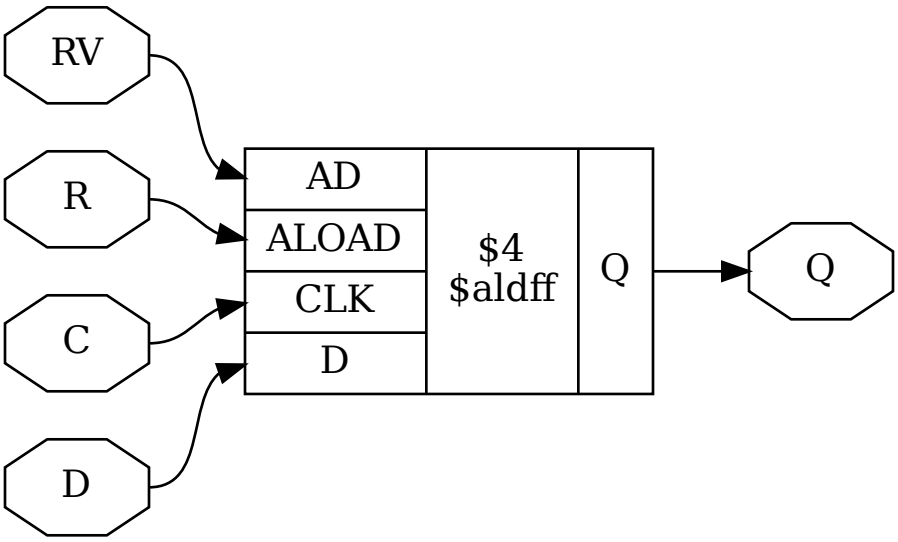
RV
R
C
D
AD
ALOAD
CLK
D
$4
$aldff
Q
Q

Listing 3.4: proc_02.v

```
module test(input D, C, R, RV,
            output reg Q);
    always @(posedge C, posedge R)
        if (R)
            Q <= RV;
        else
            Q <= D;
endmodule
```

Listing 3.5: proc_02.ys

```
read_verilog proc_02.v
hierarchy -check -top test
proc;;
```

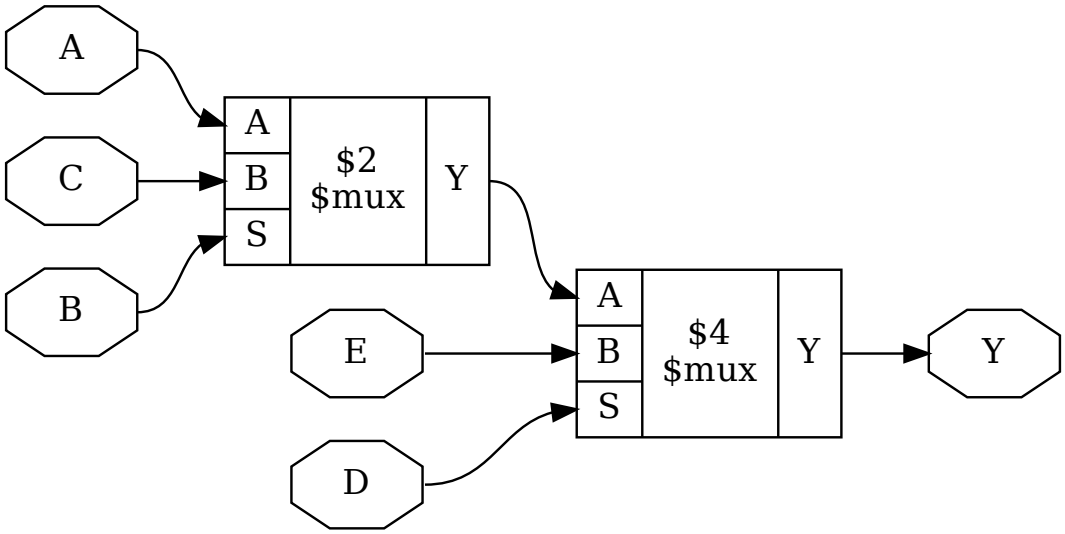

Listing 3.6: proc_03.ys

```
read_verilog proc_03.v
hierarchy -check -top test
proc;;
```

Listing 3.7: proc_03.v

```
module test(input A, B, C, D, E,
            output reg Y);
    always @* begin
```

(continues on next page)

(continued from previous page)

```
        Y <= A;
        if (B)
            Y <= C;
        if (D)
            Y <= E;
    end
endmodule
```

3.1.3 FSM handling

The *fsm* command identifies, extracts, optimizes (re-encodes), and re-synthesizes finite state machines. It again is a macro that calls a series of other commands:

Listing 3.8: Passes called by *fsm*

```
# Identify and extract FSMs:
fsm_detect
fsm_extract

# Basic optimizations:
fsm_opt
opt_clean
fsm_opt

# Expanding to nearby gate-logic (if called with -expand):
fsm_expand
opt_clean
fsm_opt

# Re-code FSM states (unless called with -norecode):
fsm_recode

# Print information about FSMs:
fsm_info

# Export FSMs in KISS2 file format (if called with -export):
fsm_export

# Map FSMs to RTL cells (unless called with -nomap):
fsm_map
```

See also *fsm - extract and optimize finite state machines*.

The algorithms used for FSM detection and extraction are influenced by a more general reported technique [STGR10].

FSM detection

The *fsm_detect* pass identifies FSM state registers. It sets the `fsm_encoding = "auto"` attribute on any (multi-bit) wire that matches the following description:

- Does not already have the `fsm_encoding` attribute.
- Is not an output of the containing module.

- Is driven by single *$dff* or *$adff* cell.
- The D-Input of this *$dff* or *$adff* cell is driven by a multiplexer tree that only has constants or the old state value on its leaves.
- The state value is only used in the said multiplexer tree or by simple relational cells that compare the state value to a constant (usually *$eq* cells).

This heuristic has proven to work very well. It is possible to overwrite it by setting `fsm_encoding = "auto"` on registers that should be considered FSM state registers and setting `fsm_encoding = "none"` on registers that match the above criteria but should not be considered FSM state registers.

Note however that marking state registers with `fsm_encoding` that are not suitable for FSM recoding can cause synthesis to fail or produce invalid results.

FSM extraction

The *fsm_extract* pass operates on all state signals marked with the (`fsm_encoding != "none"`) attribute. For each state signal the following information is determined:

- The state registers
- The asynchronous reset state if the state registers use asynchronous reset
- All states and the control input signals used in the state transition functions
- The control output signals calculated from the state signals and control inputs
- A table of all state transitions and corresponding control inputs- and outputs

The state registers (and asynchronous reset state, if applicable) is simply determined by identifying the driver for the state signal.

From there the *$mux*-tree driving the state register inputs is recursively traversed. All select inputs are control signals and the leaves of the *$mux*-tree are the states. The algorithm fails if a non-constant leaf that is not the state signal itself is found.

The list of control outputs is initialized with the bits from the state signal. It is then extended by adding all values that are calculated by cells that compare the state signal with a constant value.

In most cases this will cover all uses of the state register, thus rendering the state encoding arbitrary. If however a design uses e.g. a single bit of the state value to drive a control output directly, this bit of the state signal will be transformed to a control output of the same value.

Finally, a transition table for the FSM is generated. This is done by using the ConstEval C++ helper class (defined in kernel/consteval.h) that can be used to evaluate parts of the design. The ConstEval class can be asked to calculate a given set of result signals using a set of signal-value assignments. It can also be passed a list of stop-signals that abort the ConstEval algorithm if the value of a stop-signal is needed in order to calculate the result signals.

The *fsm_extract* pass uses the ConstEval class in the following way to create a transition table. For each state:

1. Create a ConstEval object for the module containing the FSM
2. Add all control inputs to the list of stop signals
3. Set the state signal to the current state
4. Try to evaluate the next state and control output
5. If step 4 was not successful:
    - Recursively goto step 4 with the offending stop-signal set to 0.

- Recursively goto step 4 with the offending stop-signal set to 1.

6. If step 4 was successful: Emit transition

Finally a *$fsm* cell is created with the generated transition table and added to the module. This new cell is connected to the control signals and the old drivers for the control outputs are disconnected.

FSM optimization

The *fsm_opt* pass performs basic optimizations on *$fsm* cells (not including state recoding). The following optimizations are performed (in this order):

- Unused control outputs are removed from the *$fsm* cell. The attribute `unused_bits` (that is usually set by the *opt_clean* pass) is used to determine which control outputs are unused.
- Control inputs that are connected to the same driver are merged.
- When a control input is driven by a control output, the control input is removed and the transition table altered to give the same performance without the external feedback path.
- Entries in the transition table that yield the same output and only differ in the value of a single control input bit are merged and the different bit is removed from the sensitivity list (turned into a don't-care bit).
- Constant inputs are removed and the transition table is altered to give an unchanged behaviour.
- Unused inputs are removed.

FSM recoding

The *fsm_recode* pass assigns new bit pattern to the states. Usually this also implies a change in the width of the state signal. At the moment of this writing only one-hot encoding with all-zero for the reset state is supported.

The *fsm_recode* pass can also write a text file with the changes performed by it that can be used when verifying designs synthesized by Yosys using Synopsys Formality.

3.1.4 Memory handling

The `memory` command

In the RTL netlist, memory reads and writes are individual cells. This makes consolidating the number of ports for a memory easier. The *memory* pass transforms memories to an implementation. Per default that is logic for address decoders and registers. It also is a macro command that calls the other common `memory_*` passes in a sensible order:

Listing 3.9: Passes called by *memory*

```
opt_mem
opt_mem_priority
opt_mem_feedback
memory_bmux2rom
memory_dff
opt_clean
memory_share
opt_mem_widen
memory_memx                          (when called with -memx)
opt_clean
memory_collect
```

(continues on next page)

(continued from previous page)

```
memory_bram -rules <bram_rules>     (when called with -bram)
memory_map                          (skipped if called with -nomap)
```

Todo

Make `memory_*` notes less quick

Some quick notes:

- *`memory_dff`* merges registers into the memory read- and write cells.
- *`memory_collect`* collects all read and write cells for a memory and transforms them into one multi-port memory cell.
- *`memory_map`* takes the multi-port memory cell and transforms it to address decoder logic and registers.

For more information about *`memory`*, see *memory - translate memories to basic cells*.

Example

Todo

describe `memory` images

`docs/source/code_examples/synth_flow`.

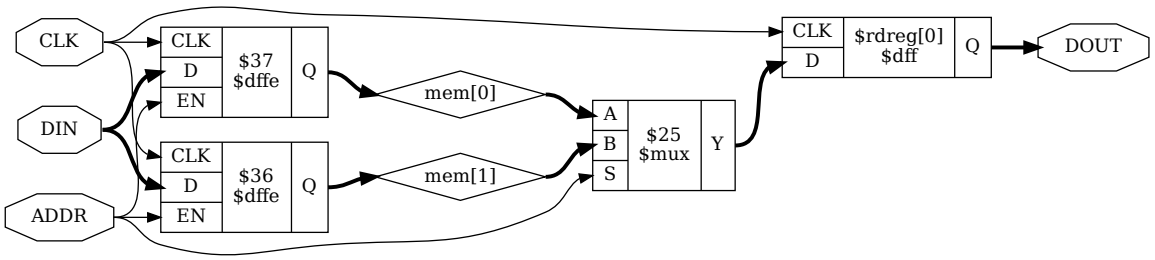

Listing 3.10: `memory_01.ys`

```
read_verilog memory_01.v
hierarchy -check -top test
proc;; memory; opt
```

Listing 3.11: `memory_01.v`

```
module test(input      CLK, ADDR,
            input      [7:0] DIN,
            output reg [7:0] DOUT);
    reg [7:0] mem [0:1];
```

(continues on next page)

(continued from previous page)

```
    always @(posedge CLK) begin
        mem[ADDR] <= DIN;
        DOUT <= mem[ADDR];
    end
endmodule
```

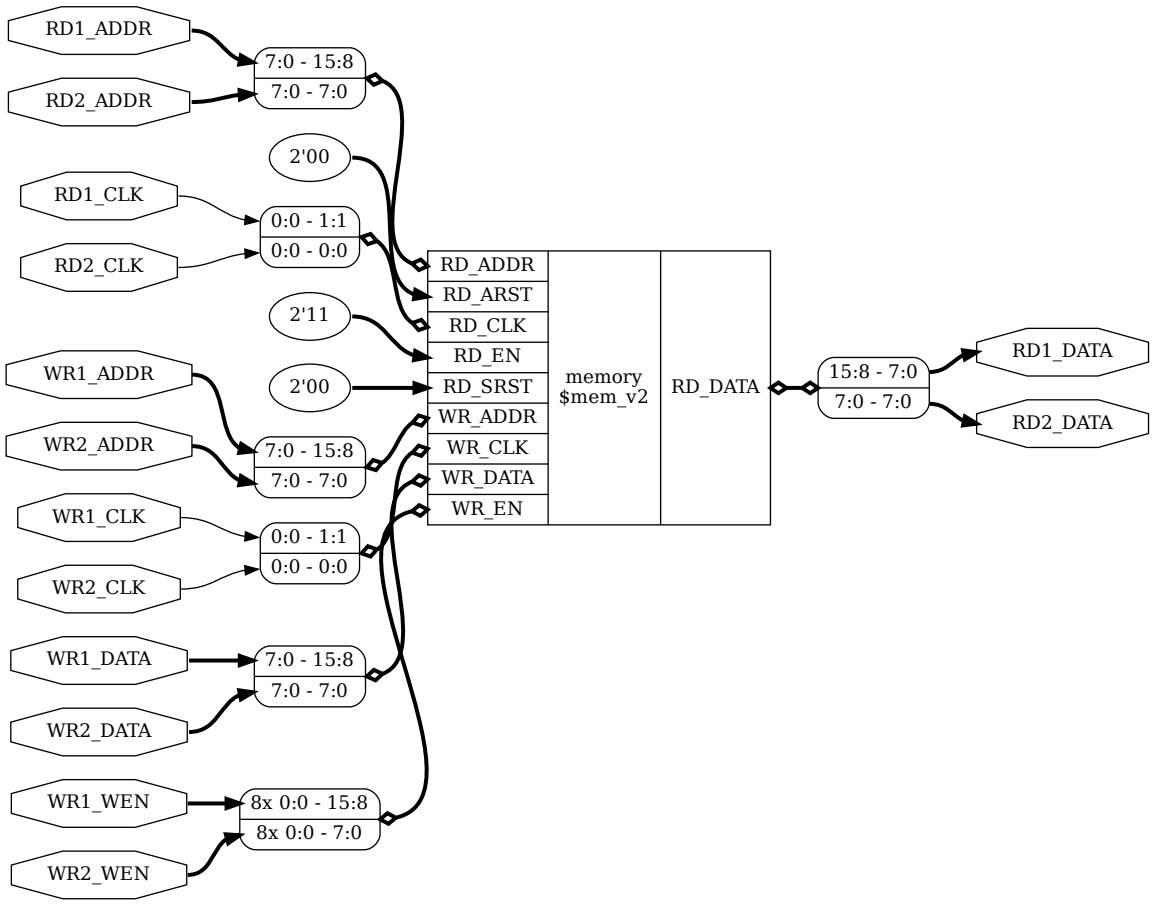

Listing 3.12: `memory_02.v`

```
module test(
    input             WR1_CLK,  WR2_CLK,
    input             WR1_WEN,  WR2_WEN,
    input      [7:0]  WR1_ADDR, WR2_ADDR,
    input      [7:0]  WR1_DATA, WR2_DATA,
    input             RD1_CLK,  RD2_CLK,
    input      [7:0]  RD1_ADDR, RD2_ADDR,
    output reg [7:0]  RD1_DATA, RD2_DATA
);

reg [7:0] memory [0:255];
```

(continues on next page)

(continued from previous page)

```
always @(posedge WR1_CLK)
    if (WR1_WEN)
        memory[WR1_ADDR] <= WR1_DATA;

always @(posedge WR2_CLK)
    if (WR2_WEN)
        memory[WR2_ADDR] <= WR2_DATA;

always @(posedge RD1_CLK)
    RD1_DATA <= memory[RD1_ADDR];

always @(posedge RD2_CLK)
    RD2_DATA <= memory[RD2_ADDR];

endmodule
```

Listing 3.13: `memory_02.ys`

```
read_verilog memory_02.v
hierarchy -check -top test
proc;; memory -nomap
opt -mux_undef -mux_bool
```

Memory mapping

Usually it is preferred to use architecture-specific RAM resources for memory. For example:

```
memory -nomap
memory_libmap -lib my_memory_map.txt
techmap -map my_memory_map.v
memory_map
```

memory_libmap attempts to convert memory cells (*$mem_v2* etc) into hardware supported memory using a provided library (`my_memory_map.txt` in the example above). Where necessary, emulation logic is added to ensure functional equivalence before and after this conversion. `techmap -map my_memory_map.v` then uses *techmap* to map to hardware primitives. Any leftover memory cells unable to be converted are then picked up by *memory_map* and mapped to DFFs and address decoders.

> **Note**
>
> More information about what mapping options are available and associated costs of each can be found by enabling debug outputs. This can be done with the *debug* command, or by using the `-g` flag when calling Yosys to globally enable debug messages.

For more on the lib format for *memory_libmap*, see passes/memory/memlib.md

Supported memory patterns

Note that not all supported patterns are included in this document, of particular note is that combinations of multiple patterns should generally work. For example, *wbe* could be used in conjunction with any of the simple dual port (SDP) models. In general if a hardware memory definition does not support a given configuration, additional logic will be instantiated to guarantee behaviour is consistent with simulation.

Notes

Memory kind selection

The memory inference code will automatically pick target memory primitive based on memory geometry and features used. Depending on the target, there can be up to four memory primitive classes available for selection:

- FF RAM (aka logic): no hardware primitive used, memory lowered to a bunch of FFs and multiplexers
  - Can handle arbitrary number of write ports, as long as all write ports are in the same clock domain
  - Can handle arbitrary number and kind of read ports
- LUT RAM (aka distributed RAM): uses LUT storage as RAM
  - Supported on most FPGAs (with notable exception of ice40)
  - Usually has one synchronous write port, one or more asynchronous read ports
  - Small
  - Will never be used for ROMs (lowering to plain LUTs is always better)
- Block RAM: dedicated memory tiles
  - Supported on basically all FPGAs
  - Supports only synchronous reads
  - Two ports with separate clocks
  - Usually supports true dual port (with notable exception of ice40 that only supports SDP)
  - Usually supports asymmetric memories and per-byte write enables
  - Several kilobits in size
- Huge RAM:
  - Only supported on several targets:
    - Some Xilinx UltraScale devices (UltraRAM)
      - Two ports, both with mutually exclusive synchronous read and write
      - Single clock
      - Initial data must be all-0
    - Some ice40 devices (SPRAM)
      - Single port with mutually exclusive synchronous read and write
      - Does not support initial data
    - Nexus (large RAM)
      - Two ports, both with mutually exclusive synchronous read and write

        - Single clock
    - Will not be automatically selected by memory inference code, needs explicit opt-in via ram_style attribute

In general, you can expect the automatic selection process to work roughly like this:

- If any read port is asynchronous, only LUT RAM (or FF RAM) can be used.
- If there is more than one write port, only block RAM can be used, and this needs to be a hardware-supported true dual port pattern
    - ... unless all write ports are in the same clock domain, in which case FF RAM can also be used, but this is generally not what you want for anything but really small memories
- Otherwise, either FF RAM, LUT RAM, or block RAM will be used, depending on memory size

This process can be overridden by attaching a ram_style attribute to the memory:

- `(* ram_style = "logic" *)` selects FF RAM
- `(* ram_style = "distributed" *)` selects LUT RAM
- `(* ram_style = "block" *)` selects block RAM
- `(* ram_style = "huge" *)` selects huge RAM

It is an error if this override cannot be realized for the given target.

Many alternate spellings of the attribute are also accepted, for compatibility with other software.

Initial data

Most FPGA targets support initializing all kinds of memory to user-provided values. If explicit initialization is not used the initial memory value is undefined. Initial data can be provided by either initial statements writing memory cells one by one of `$readmemh` or `$readmemb` system tasks. For an example pattern, see *sr_init*.

Write port with byte enables

- Byte enables can be used with any supported pattern
- To ensure that multiple writes will be merged into one port, they need to have disjoint bit ranges, have the same address, and the same clock
- Any write enable granularity will be accepted (down to per-bit write enables), but using smaller granularity than natively supported by the target is very likely to be inefficient (eg. using 4-bit bytes on ECP5 will result in either padding the bytes with 5 dummy bits to native 9-bit units or splitting the RAM into two block RAMs)

```
reg [31 : 0] mem [2**ADDR_WIDTH - 1 : 0];

always @(posedge clk) begin
        if (write_enable[0])
                mem[write_addr][7:0] <= write_data[7:0];
        if (write_enable[1])
                mem[write_addr][15:8] <= write_data[15:8];
        if (write_enable[2])
                mem[write_addr][23:16] <= write_data[23:16];
        if (write_enable[3])
                mem[write_addr][31:24] <= write_data[31:24];
```

(continues on next page)

(continued from previous page)

```
        if (read_enable)
                read_data <= mem[read_addr];
end
```

Simple dual port (SDP) memory patterns

Todo

assorted enables, e.g. cen, wen+ren

Asynchronous-read SDP

- This will result in LUT RAM on supported targets

```
reg [DATA_WIDTH - 1 : 0] mem [2**ADDR_WIDTH - 1 : 0];
always @(posedge clk)
        if (write_enable)
                mem[write_addr] <= write_data;
assign read_data = mem[read_addr];
```

Synchronous SDP with clock domain crossing

- Will result in block RAM or LUT RAM depending on size
- No behavior guarantees in case of simultaneous read and write to the same address

```
reg [DATA_WIDTH - 1 : 0] mem [2**ADDR_WIDTH - 1 : 0];

always @(posedge write_clk) begin
        if (write_enable)
                mem[write_addr] <= write_data;
end

always @(posedge read_clk) begin
        if (read_enable)
                read_data <= mem[read_addr];
end
```

Synchronous SDP read first

- The read and write parts can be in the same or different processes.
- Will result in block RAM or LUT RAM depending on size
- As long as the same clock is used for both, yosys will ensure read-first behavior. This may require extra circuitry on some targets for block RAM. If this is not necessary, use one of the patterns below.

```
reg [DATA_WIDTH - 1 : 0] mem [2**ADDR_WIDTH - 1 : 0];

always @(posedge clk) begin
        if (write_enable)
```

(continues on next page)

(continued from previous page)

```
                mem[write_addr] <= write_data;
        if (read_enable)
                read_data <= mem[read_addr];
end
```

Synchronous SDP with undefined collision behavior

- Like above, but the read value is undefined when read and write ports target the same address in the same cycle

```
reg [DATA_WIDTH - 1 : 0] mem [2**ADDR_WIDTH - 1 : 0];

always @(posedge clk) begin
        if (write_enable)
                mem[write_addr] <= write_data;

        if (read_enable) begin
                read_data <= mem[read_addr];

        if (write_enable && read_addr == write_addr)
                // this if block
                read_data <= 'x;
        end
end
```

- Or below, using the no_rw_check attribute

```
(* no_rw_check *)
reg [DATA_WIDTH - 1 : 0] mem [2**ADDR_WIDTH - 1 : 0];

always @(posedge clk) begin
        if (write_enable)
                mem[write_addr] <= write_data;

        if (read_enable)
                read_data <= mem[read_addr];
end
```

Synchronous SDP with write-first behavior

- Will result in block RAM or LUT RAM depending on size
- May use additional circuitry for block RAM if write-first is not natively supported. Will always use additional circuitry for LUT RAM.

```
reg [DATA_WIDTH - 1 : 0] mem [2**ADDR_WIDTH - 1 : 0];

always @(posedge clk) begin
        if (write_enable)
                mem[write_addr] <= write_data;

        if (read_enable) begin
```

(continues on next page)

(continued from previous page)

```
                read_data <= mem[read_addr];
                if (write_enable && read_addr == write_addr)
                        read_data <= write_data;
        end
end
```

Synchronous SDP with write-first behavior (alternate pattern)

- This pattern is supported for compatibility, but is much less flexible than the above

```
reg [ADDR_WIDTH - 1 : 0] read_addr_reg;
reg [DATA_WIDTH - 1 : 0] mem [2**ADDR_WIDTH - 1 : 0];

always @(posedge clk) begin
        if (write_enable)
                mem[write_addr] <= write_data;
        read_addr_reg <= read_addr;
end

assign read_data = mem[read_addr_reg];
```

Single-port RAM memory patterns

Asynchronous-read single-port RAM

- Will result in single-port LUT RAM on supported targets

```
reg [DATA_WIDTH - 1 : 0] mem [2**ADDR_WIDTH - 1 : 0];
always @(posedge clk)
        if (write_enable)
                mem[addr] <= write_data;
assign read_data = mem[addr];
```

Synchronous single-port RAM with mutually exclusive read/write

- Will result in single-port block RAM or LUT RAM depending on size
- This is the correct pattern to infer ice40 SPRAM (with manual ram_style selection)
- On targets that don't support read/write block RAM ports (eg. ice40), will result in SDP block RAM instead
- For block RAM, will use "NO_CHANGE" mode if available

```
reg [DATA_WIDTH - 1 : 0] mem [2**ADDR_WIDTH - 1 : 0];

always @(posedge clk) begin
        if (write_enable)
                mem[addr] <= write_data;
        else if (read_enable)
                read_data <= mem[addr];
end
```

Synchronous single-port RAM with read-first behavior

- Will only result in single-port block RAM when read-first behavior is natively supported; otherwise, SDP RAM with additional circuitry will be used
- Many targets (Xilinx, ECP5, ...) can only natively support read-first/write-first single-port RAM (or TDP RAM) where the write_enable signal implies the read_enable signal (ie. can never write without reading). The memory inference code will run a simple SAT solver on the control signals to determine if this is the case, and insert emulation circuitry if it cannot be easily proven.

```
reg [DATA_WIDTH - 1 : 0] mem [2**ADDR_WIDTH - 1 : 0];

always @(posedge clk) begin
        if (write_enable)
                mem[addr] <= write_data;
        if (read_enable)
                read_data <= mem[addr];
end
```

Synchronous single-port RAM with write-first behavior

- Will result in single-port block RAM or LUT RAM when supported
- Block RAMs will require extra circuitry if write-first behavior not natively supported

```
reg [DATA_WIDTH - 1 : 0] mem [2**ADDR_WIDTH - 1 : 0];

always @(posedge clk) begin
        if (write_enable)
                mem[addr] <= write_data;
        if (read_enable)
                if (write_enable)
                        read_data <= write_data;
                else
                        read_data <= mem[addr];
end
```

Synchronous read port with initial value

- Initial read port values can be combined with any other supported pattern
- If block RAM is used and initial read port values are not natively supported by the target, small emulation circuit will be inserted

```
reg [DATA_WIDTH - 1 : 0] mem [2**ADDR_WIDTH - 1 : 0];
reg [DATA_WIDTH - 1 : 0] read_data;
initial read_data = 'h1234;

always @(posedge clk) begin
        if (write_enable)
                mem[write_addr] <= write_data;
        if (read_enable)
                read_data <= mem[read_addr];
end
```

Read register reset patterns

Resets can be combined with any other supported pattern (except that synchronous reset and asynchronous reset cannot both be used on a single read port). If block RAM is used and the selected reset (synchronous or asynchronous) is used but not natively supported by the target, small emulation circuitry will be inserted.

Synchronous reset, reset priority over enable

```
reg [DATA_WIDTH - 1 : 0] mem [2**ADDR_WIDTH - 1 : 0];

always @(posedge clk) begin
        if (write_enable)
                mem[write_addr] <= write_data;

        if (read_reset)
                read_data <= 'h1234;
        else if (read_enable)
                read_data <= mem[read_addr];
end
```

Synchronous reset, enable priority over reset

```
reg [DATA_WIDTH - 1 : 0] mem [2**ADDR_WIDTH - 1 : 0];

always @(posedge clk) begin
        if (write_enable)
                mem[write_addr] <= write_data;
        if (read_enable)
                if (read_reset)
                        read_data <= 'h1234;
                else
                        read_data <= mem[read_addr];
end
```

Synchronous read port with asynchronous reset

```
reg [DATA_WIDTH - 1 : 0] mem [2**ADDR_WIDTH - 1 : 0];

always @(posedge clk) begin
        if (write_enable)
                mem[write_addr] <= write_data;
end

always @(posedge clk, posedge read_reset) begin
        if (read_reset)
                read_data <= 'h1234;
        else if (read_enable)
                read_data <= mem[read_addr];
end
```

Asymmetric memory patterns

To construct an asymmetric memory (memory with read/write ports of differing widths):

- Declare the memory with the width of the narrowest intended port
- Split all wide ports into multiple narrow ports
- To ensure the wide ports will be correctly merged:
  - For the address, use a concatenation of actual address in the high bits and a constant in the low bits
  - Ensure the actual address is identical for all ports belonging to the wide port
  - Ensure that clock is identical
  - For read ports, ensure that enable/reset signals are identical (for write ports, the enable signal may vary — this will result in using the byte enable functionality)

Asymmetric memory is supported on all targets, but may require emulation circuitry where not natively supported. Note that when the memory is larger than the underlying block RAM primitive, hardware asymmetric memory support is likely not to be used even if present as it is more expensive.

Wide synchronous read port

```
reg [7:0] mem [0:255];
wire [7:0] write_addr;
wire [5:0] read_addr;
wire [7:0] write_data;
reg [31:0] read_data;

always @(posedge clk) begin
        if (write_enable)
                mem[write_addr] <= write_data;
        if (read_enable) begin
                read_data[7:0] <= mem[{read_addr, 2'b00}];
                read_data[15:8] <= mem[{read_addr, 2'b01}];
                read_data[23:16] <= mem[{read_addr, 2'b10}];
                read_data[31:24] <= mem[{read_addr, 2'b11}];
        end
end
```

Wide asynchronous read port

- Note: the only target natively supporting this pattern is Xilinx UltraScale

```
reg [7:0] mem [0:511];
wire [8:0] write_addr;
wire [5:0] read_addr;
wire [7:0] write_data;
wire [63:0] read_data;

always @(posedge clk) begin
        if (write_enable)
                mem[write_addr] <= write_data;
end
```

(continues on next page)

(continued from previous page)

```
assign read_data[7:0] = mem[{read_addr, 3'b000}];
assign read_data[15:8] = mem[{read_addr, 3'b001}];
assign read_data[23:16] = mem[{read_addr, 3'b010}];
assign read_data[31:24] = mem[{read_addr, 3'b011}];
assign read_data[39:32] = mem[{read_addr, 3'b100}];
assign read_data[47:40] = mem[{read_addr, 3'b101}];
assign read_data[55:48] = mem[{read_addr, 3'b110}];
assign read_data[63:56] = mem[{read_addr, 3'b111}];
```

Wide write port

```
reg [7:0] mem [0:255];
wire [5:0] write_addr;
wire [7:0] read_addr;
wire [31:0] write_data;
reg [7:0] read_data;

always @(posedge clk) begin
        if (write_enable[0])
                mem[{write_addr, 2'b00}] <= write_data[7:0];
        if (write_enable[1])
                mem[{write_addr, 2'b01}] <= write_data[15:8];
        if (write_enable[2])
                mem[{write_addr, 2'b10}] <= write_data[23:16];
        if (write_enable[3])
                mem[{write_addr, 2'b11}] <= write_data[31:24];
        if (read_enable)
                read_data <= mem[read_addr];
end
```

True dual port (TDP) patterns

- Many different variations of true dual port memory can be created by combining two single-port RAM patterns on the same memory
- When TDP memory is used, memory inference code has much less maneuver room to create requested semantics compared to individual single-port patterns (which can end up lowered to SDP memory where necessary) — supported patterns depend strongly on the target
- In particular, when both ports have the same clock, it's likely that "undefined collision" mode needs to be manually selected to enable TDP memory inference
- The examples below are non-exhaustive — many more combinations of port types are possible
- Note: if two write ports are in the same process, this defines a priority relation between them (if both ports are active in the same clock, the later one wins). On almost all targets, this will result in a bit of extra circuitry to ensure the priority semantics. If this is not what you want, put them in separate processes.
  - Priority is not supported when using the verific front end and any priority semantics are ignored.

TDP with different clocks, exclusive read/write

```
reg [DATA_WIDTH - 1 : 0] mem [2**ADDR_WIDTH - 1 : 0];

always @(posedge clk_a) begin
        if (write_enable_a)
                mem[addr_a] <= write_data_a;
        else if (read_enable_a)
                read_data_a <= mem[addr_a];
end

always @(posedge clk_b) begin
        if (write_enable_b)
                mem[addr_b] <= write_data_b;
        else if (read_enable_b)
                read_data_b <= mem[addr_b];
end
```

TDP with same clock, read-first behavior

- This requires hardware inter-port read-first behavior, and will only work on some targets (Xilinx, Nexus)

```
reg [DATA_WIDTH - 1 : 0] mem [2**ADDR_WIDTH - 1 : 0];

always @(posedge clk) begin
        if (write_enable_a)
                mem[addr_a] <= write_data_a;
        if (read_enable_a)
                read_data_a <= mem[addr_a];
end

always @(posedge clk) begin
        if (write_enable_b)
                mem[addr_b] <= write_data_b;
        if (read_enable_b)
                read_data_b <= mem[addr_b];
end
```

TDP with multiple read ports

- The combination of a single write port with an arbitrary amount of read ports is supported on all targets — if a multi-read port primitive is available (like Xilinx RAM64M), it'll be used as appropriate. Otherwise, the memory will be automatically split into multiple primitives.

```
reg [31:0] mem [0:31];

always @(posedge clk) begin
        if (write_enable)
                mem[write_addr] <= write_data;
end

assign read_data_a = mem[read_addr_a];
```

(continues on next page)

(continued from previous page)

```
assign read_data_b = mem[read_addr_b];
assign read_data_c = mem[read_addr_c];
```

Patterns only supported with Verific

The following patterns are only supported when the design is read in using the Verific front-end.

Synchronous SDP with write-first behavior via blocking assignments

- Use *sdp_wf* for compatibility with Yosys Verilog frontend.

```
reg [DATA_WIDTH - 1 : 0] mem [2**ADDR_WIDTH - 1 : 0];

always @(posedge clk) begin
        if (write_enable)
                mem[write_addr] = write_data;

        if (read_enable)
                read_data <= mem[read_addr];
end
```

Asymmetric memories via part selection

- Build wide ports out of narrow ports instead (see *wide_sr*) for compatibility with Yosys Verilog frontend.

```
reg [31:0] mem [2**ADDR_WIDTH - 1 : 0];

wire [1:0] byte_lane;
wire [7:0] write_data;

always @(posedge clk) begin
        if (write_enable)
                mem[write_addr][byte_lane * 8 +: 8] <= write_data;

        if (read_enable)
                read_data <= mem[read_addr];
end
```

Undesired patterns

Asynchronous writes

- Not supported in modern FPGAs
- Not supported in yosys code anyhow

```
reg [DATA_WIDTH - 1 : 0] mem [2**ADDR_WIDTH - 1 : 0];

always @* begin
        if (write_enable)
                mem[write_addr] = write_data;
```

(continues on next page)

(continued from previous page)

```
end

assign read_data = mem[read_addr];
```

3.1.5 Optimization passes

Yosys employs a number of optimizations to generate better and cleaner results. This chapter outlines these optimizations.

Todo

"outlines these optimizations" or "outlines *some*.."?

The `opt` macro command

The Yosys pass *`opt`* runs a number of simple optimizations. This includes removing unused signals and cells and const folding. It is recommended to run this pass after each major step in the synthesis script. As listed in *opt - perform simple optimizations*, this macro command calls the following `opt_*` commands:

Listing 3.14: Passes called by *`opt`*

```
opt_expr
opt_merge -nomux

do
    opt_muxtree
    opt_reduce
    opt_merge
    opt_share  (-full only)
    opt_dff  (except when called with -noff)
    opt_clean
    opt_expr
while <changed design>
```

Constant folding and simple expression rewriting - `opt_expr`

Todo

unsure if this is too much detail and should be in *Yosys internals*

This pass performs constant folding on the internal combinational cell types described in *Internal cell library*. This means a cell with all constant inputs is replaced with the constant value this cell drives. In some cases this pass can also optimize cells with some constant inputs.

Table 3.1: Const folding rules for `$_AND_` cells as used in `opt_expr`.

A-Input	B-Input	Replacement
any	0	0
0	any	0
1	1	1
X/Z	X/Z	X
1	X/Z	X
X/Z	1	X
any	X/Z	0
X/Z	any	0
a	1	*a*
1	*b*	*b*

Table 3.1 shows the replacement rules used for optimizing an *$_AND_* gate. The first three rules implement the obvious const folding rules. Note that 'any' might include dynamic values calculated by other parts of the circuit. The following three lines propagate undef (X) states. These are the only three cases in which it is allowed to propagate an undef according to Sec. 5.1.10 of IEEE Std. 1364-2005 [A+06].

The next two lines assume the value 0 for undef states. These two rules are only used if no other substitutions are possible in the current module. If other substitutions are possible they are performed first, in the hope that the 'any' will change to an undef value or a 1 and therefore the output can be set to undef.

The last two lines simply replace an *$_AND_* gate with one constant-1 input with a buffer.

Besides this basic const folding the *opt_expr* pass can replace 1-bit wide *$eq* and *$ne* cells with buffers or not-gates if one input is constant. Equality checks may also be reduced in size if there are redundant bits in the arguments (i.e. bits which are constant on both inputs). This can, for example, result in a 32-bit wide constant like `255` being reduced to the 8-bit value of `8'11111111` if the signal being compared is only 8-bit as in *addr_gen module after opt_expr; clean* of *Synthesis starter*.

The *opt_expr* pass is very conservative regarding optimizing *$mux* cells, as these cells are often used to model decision-trees and breaking these trees can interfere with other optimizations.

Listing 3.15: example verilog for demonstrating *opt_expr*

```
module uut(
    input a,
    output y, z
);
    assign y = a == a;
    assign z = a != a;
endmodule
```

Merging identical cells - `opt_merge`

This pass performs trivial resource sharing. This means that this pass identifies cells with identical inputs and replaces them with a single instance of the cell.

The option `-nomux` can be used to disable resource sharing for multiplexer cells (*$mux* and *$pmux*.) This can be useful as it prevents multiplexer trees to be merged, which might prevent *opt_muxtree* to identify possible optimizations.

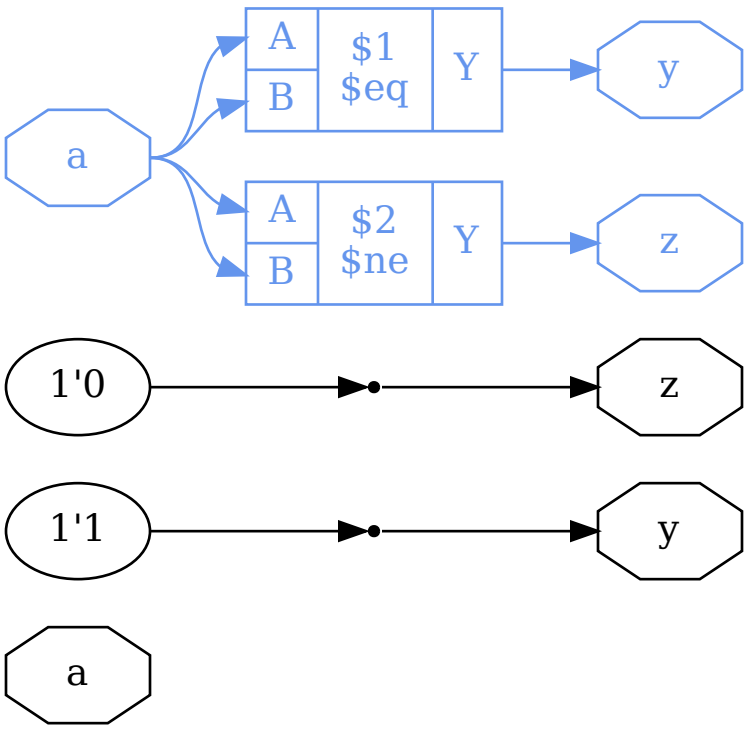

Fig. 3.1: Before and after *opt_expr*

Listing 3.16: example verilog for demonstrating *opt_merge*

```
module uut(
    input  [3:0] a, b,
    output [3:0] y, z
);
    assign y = a + b;
    assign z = b + a;
endmodule
```

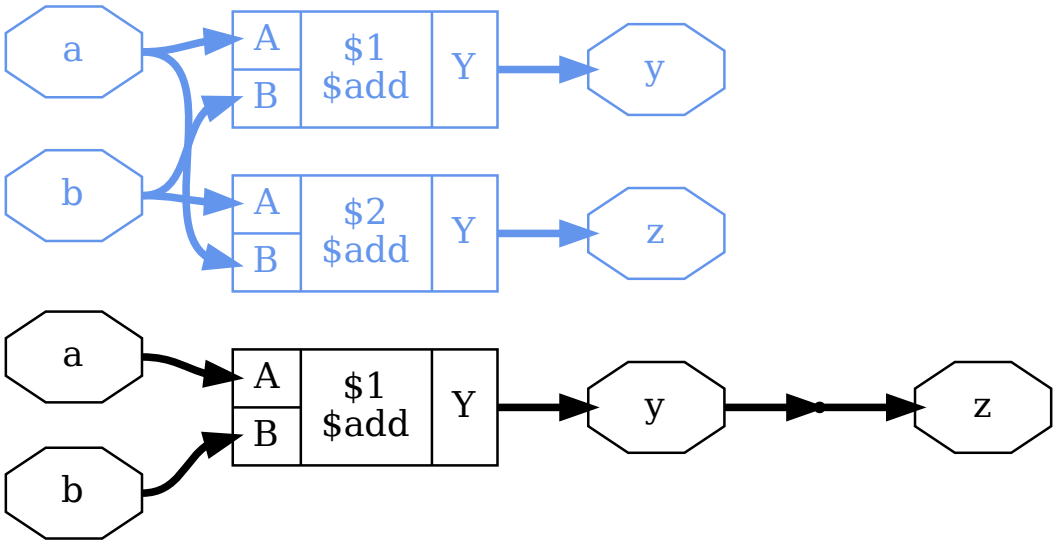

Fig. 3.2: Before and after *opt_merge*

Removing never-active branches from multiplexer tree - opt_muxtree

This pass optimizes trees of multiplexer cells by analyzing the select inputs. Consider the following simple example:

Listing 3.17: example verilog for demonstrating *opt_muxtree*

```
module uut(
    input a, b, c, d,
    output y
);
    assign y = a ? (a ? b : c) : d;
endmodule
```

The output can never be `c`, as this would require `a` to be 1 for the outer multiplexer and 0 for the inner multiplexer. The *opt_muxtree* pass detects this contradiction and replaces the inner multiplexer with a constant 1, yielding the logic for `y = a ? b : d`.

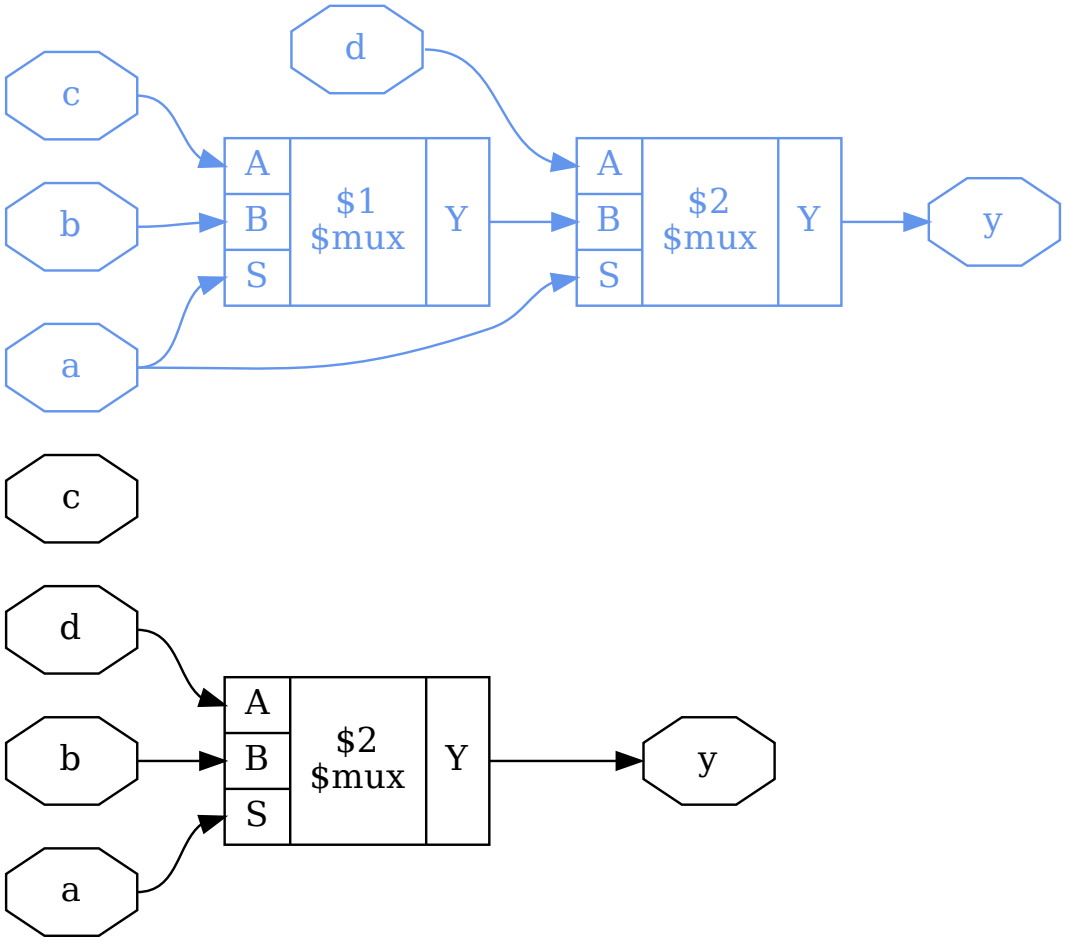

Fig. 3.3: Before and after *opt_muxtree*

Simplifying large MUXes and AND/OR gates - opt_reduce

This is a simple optimization pass that identifies and consolidates identical input bits to *$reduce_and* and *$reduce_or* cells. It also sorts the input bits to ease identification of shareable *$reduce_and* and *$reduce_or* cells in other passes.

This pass also identifies and consolidates identical inputs to multiplexer cells. In this case the new shared select bit is driven using a *$reduce_or* cell that combines the original select bits.

Lastly this pass consolidates trees of *$reduce_and* cells and trees of *$reduce_or* cells to single large *$reduce_and* or *$reduce_or* cells.

These three simple optimizations are performed in a loop until a stable result is produced.

Merging mutually exclusive cells with shared inputs - opt_share

This pass identifies mutually exclusive cells of the same type that:

a. share an input signal, and

b. drive the same *$mux*, *$_MUX_*, or *$pmux* multiplexing cell,

allowing the cell to be merged and the multiplexer to be moved from multiplexing its output to multiplexing the non-shared input signals.

Listing 3.18: example verilog for demonstrating *opt_share*

```
module uut(
    input  [15:0] a, b,
    input         sel,
    output [15:0] res,
);
    assign res = {sel ? a + b : a - b};
endmodule
```

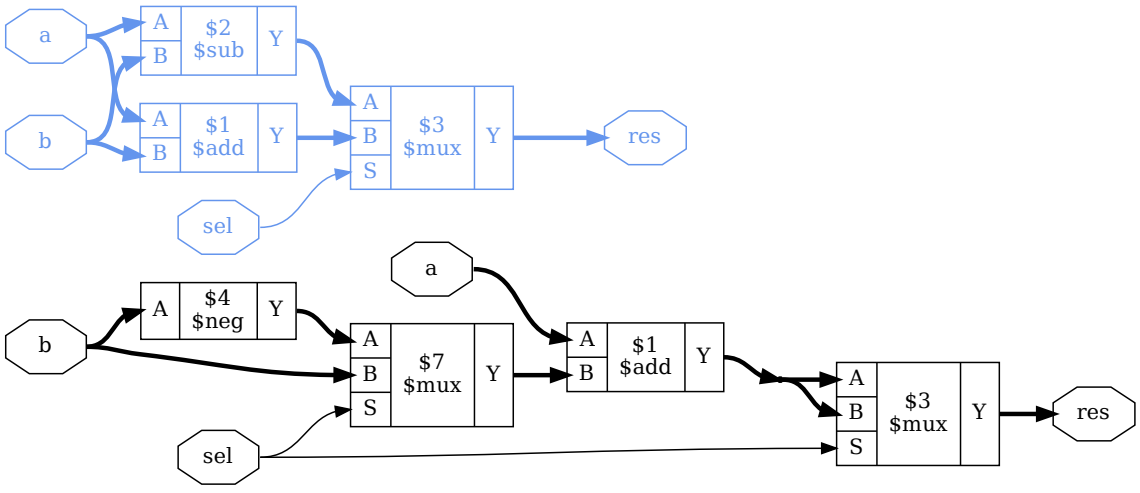

Fig. 3.4: Before and after *opt_share*

When running *opt* in full, the original *$mux* (labeled $3) is optimized away by *opt_expr*.

Performing DFF optimizations - `opt_dff`

Todo

`$_DFF_` isn't a valid cell

This pass identifies single-bit d-type flip-flops (`$_DFF_`, *`$dff`*, and *`$adff`* cells) with a constant data input and replaces them with a constant driver. It can also merge clock enables and synchronous reset multiplexers, removing unused control inputs.

Called with `-nodffe` and `-nosdff`, this pass is used to prepare a design for *FSM handling*.

Removing unused cells and wires - `opt_clean` pass

This pass identifies unused signals and cells and removes them from the design. It also creates an `unused_bits` attribute on wires with unused bits. This attribute can be used for debugging or by other optimization passes.

When to use `opt` or `clean`

Usually it does not hurt to call *`opt`* after each regular command in the synthesis script. But it increases the synthesis time, so it is favourable to only call *`opt`* when an improvement can be achieved.

It is generally a good idea to call *`opt`* before inherently expensive commands such as *`sat`* or *`freduce`*, as the possible gain is much higher in these cases as the possible loss.

The *`clean`* command, which is an alias for *`opt_clean`* with fewer outputs, on the other hand is very fast and many commands leave a mess (dangling signal wires, etc). For example, most commands do not remove any wires or cells. They just change the connections and depend on a later call to clean to get rid of the now unused objects. So the occasional `;;`, which itself is an alias for *`clean`*, is a good idea in every synthesis script, e.g:

```
hierarchy; proc; opt; memory; opt_expr;; fsm;;
```

Other optimizations

Todo

more on the other optimizations

- *wreduce - reduce the word size of operations if possible*
- *peepopt - collection of peephole optimizers*
- *share - perform sat-based resource sharing*
- *`abc`* and *`abc9`*, see also: *The ABC toolbox*.

3.1.6 Technology mapping

Todo

less academic, check text is coherent

Previous chapters outlined how HDL code is transformed into an RTL netlist. The RTL netlist is still based on abstract coarse-grain cell types like arbitrary width adders and even multipliers. This chapter covers how an RTL netlist is transformed into a functionally equivalent netlist utilizing the cell types available in the target architecture.

Technology mapping is often performed in two phases. In the first phase RTL cells are mapped to an internal library of single-bit cells (see *Gate-level cells*). In the second phase this netlist of internal gate types is transformed to a netlist of gates from the target technology library.

When the target architecture provides coarse-grain cells (such as block ram or ALUs), these must be mapped to directly form the RTL netlist, as information on the coarse-grain structure of the design is lost when it is mapped to bit-width gate types.

Cell substitution

The simplest form of technology mapping is cell substitution, as performed by the techmap pass. This pass, when provided with a Verilog file that implements the RTL cell types using simpler cells, simply replaces the RTL cells with the provided implementation.

When no map file is provided, techmap uses a built-in map file that maps the Yosys RTL cell types to the internal gate library used by Yosys. The curious reader may find this map file as `techlibs/common/techmap.v` in the Yosys source tree.

Additional features have been added to techmap to allow for conditional mapping of cells (see *techmap - generic technology mapper*). This can for example be useful if the target architecture supports hardware multipliers for certain bit-widths but not for others.

A usual synthesis flow would first use the techmap pass to directly map some RTL cells to coarse-grain cells provided by the target architecture (if any) and then use techmap with the built-in default file to map the remaining RTL cells to gate logic.

Subcircuit substitution

Sometimes the target architecture provides cells that are more powerful than the RTL cells used by Yosys. For example a cell in the target architecture that can calculate the absolute-difference of two numbers does not match any single RTL cell type but only combinations of cells.

For these cases Yosys provides the extract pass that can match a given set of modules against a design and identify the portions of the design that are identical (i.e. isomorphic subcircuits) to any of the given modules. These matched subcircuits are then replaced by instances of the given modules.

The extract pass also finds basic variations of the given modules, such as swapped inputs on commutative cell types.

In addition to this the extract pass also has limited support for frequent subcircuit mining, i.e. the process of finding recurring subcircuits in the design. This has a few applications, including the design of new coarse-grain architectures [GW13].

The hard algorithmic work done by the extract pass (solving the isomorphic subcircuit problem and frequent subcircuit mining) is performed using the SubCircuit library that can also be used stand-alone without Yosys (see *SubCircuit*).

Gate-level technology mapping

Todo

newer techmap libraries appear to be largely `.v` instead of `.lib`

On the gate-level the target architecture is usually described by a "Liberty file". The Liberty file format is an industry standard format that can be used to describe the behaviour and other properties of standard library cells .

Mapping a design utilizing the Yosys internal gate library (e.g. as a result of mapping it to this representation using the techmap pass) is performed in two phases.

First the register cells must be mapped to the registers that are available on the target architectures. The target architecture might not provide all variations of d-type flip-flops with positive and negative clock edge, high-active and low-active asynchronous set and/or reset, etc. Therefore the process of mapping the registers might add additional inverters to the design and thus it is important to map the register cells first.

Mapping of the register cells may be performed by using the dfflibmap pass. This pass expects a Liberty file as argument (using the -liberty option) and only uses the register cells from the Liberty file.

Secondly the combinational logic must be mapped to the target architecture. This is done using the external program ABC via the abc pass by using the -liberty option to the pass. Note that in this case only the combinatorial cells are used from the cell library.

Occasionally Liberty files contain trade secrets (such as sensitive timing information) that cannot be shared freely. This complicates processes such as reporting bugs in the tools involved. When the information in the Liberty file used by Yosys and ABC are not part of the sensitive information, the additional tool yosys-filterlib (see *yosys-filterlib*) can be used to strip the sensitive information from the Liberty file.

3.1.7 The extract pass

- Like the *techmap* pass, the *extract* pass is called with a map file. It compares the circuits inside the modules of the map file with the design and looks for sub-circuits in the design that match any of the modules in the map file.
- If a match is found, the *extract* pass will replace the matching subcircuit with an instance of the module from the map file.
- In a way the *extract* pass is the inverse of the techmap pass.

Todo

add/expand supporting text, also mention custom pattern matching and pmgen

Example code can be found in `docs/source/code_examples/macc`.

```
read_verilog macc_simple_test.v
hierarchy -check -top test;;
```

```
extract -constports -map macc_simple_xmap.v;;
```

Listing 3.19: `macc_simple_test.v`

```
module test(a, b, c, d, y);
input [15:0] a, b;
input [31:0] c, d;
output [31:0] y;
assign y = a * b + c + d;
endmodule
```

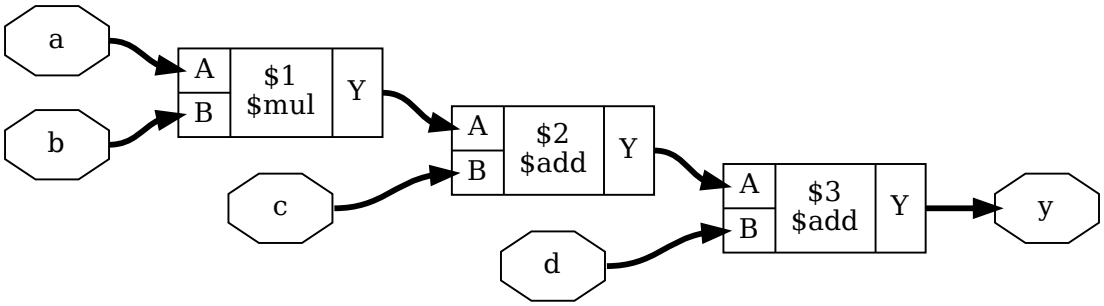

Fig. 3.5: before *extract*

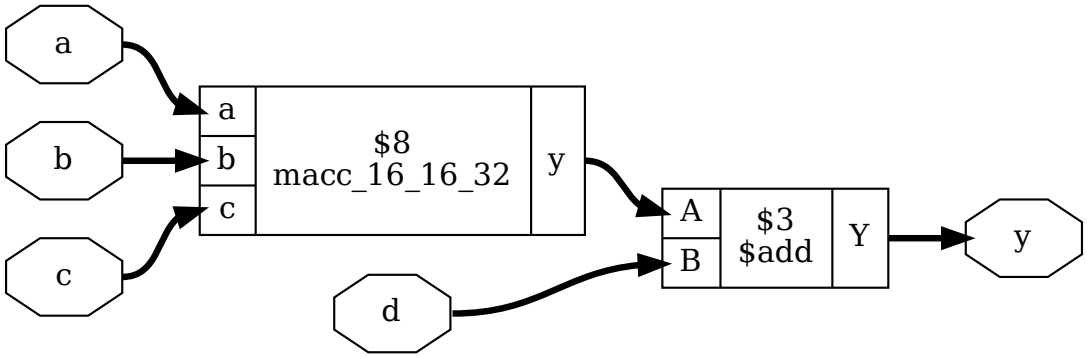

Fig. 3.6: after *extract*

Listing 3.20: `macc_simple_xmap.v`

```
module macc_16_16_32(a, b, c, y);
input [15:0] a, b;
input [31:0] c;
output [31:0] y;
assign y = a*b + c;
endmodule
```

Listing 3.21: `macc_simple_test_01.v`

```
module test(a, b, c, d, x, y);
input [15:0] a, b, c, d;
input [31:0] x;
output [31:0] y;
assign y = a*b + c*d + x;
endmodule
```

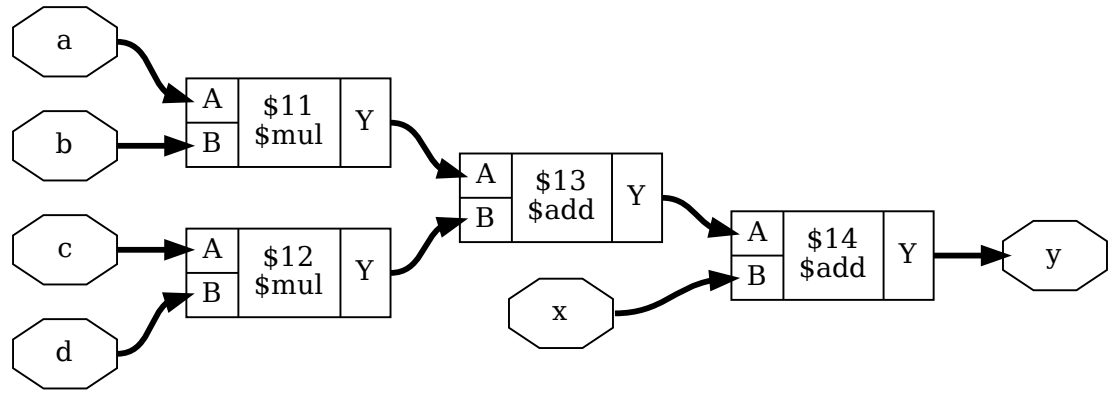

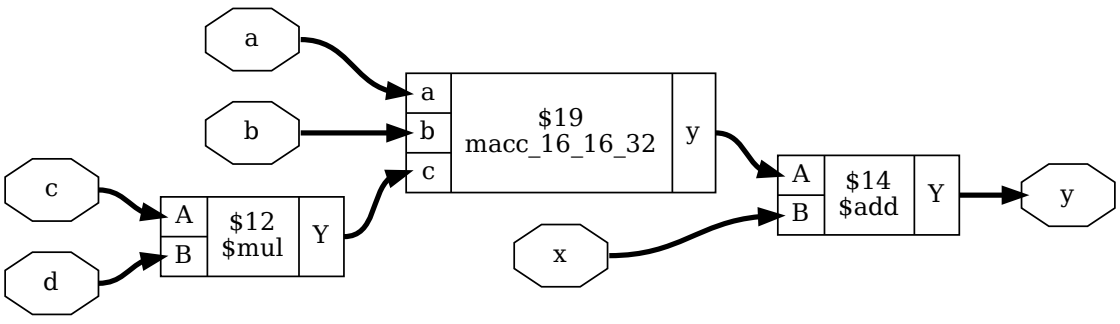

Listing 3.22: `macc_simple_test_02.v`

```
module test(a, b, c, d, x, y);
input [15:0] a, b, c, d;
input [31:0] x;
output [31:0] y;
assign y = a*b + (c*d + x);
endmodule
```

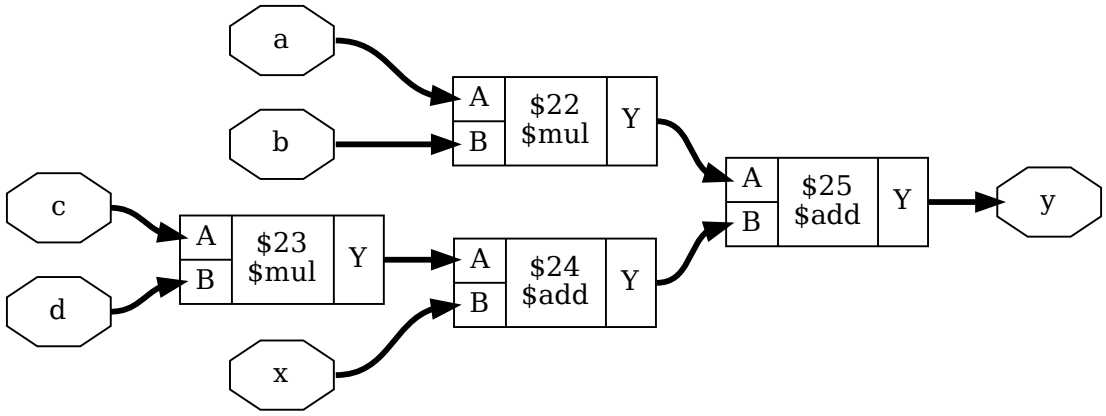

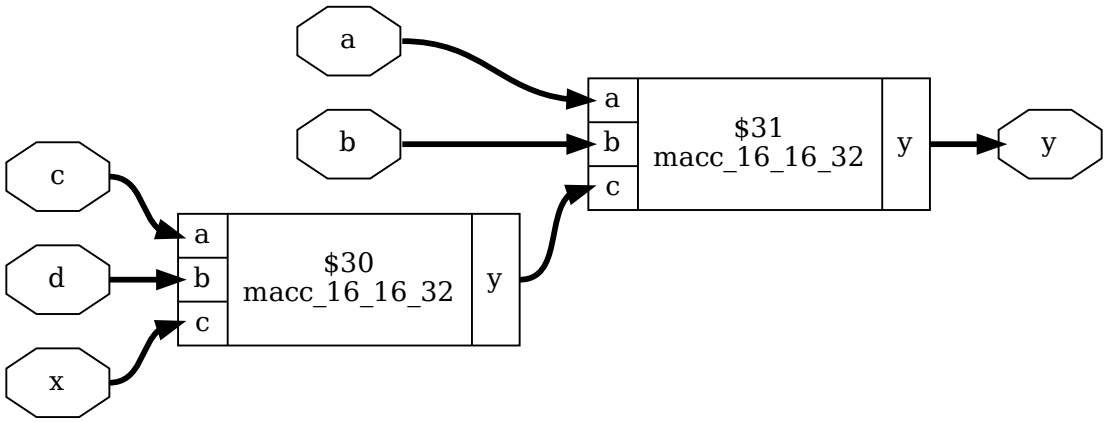

The wrap-extract-unwrap method

Often a coarse-grain element has a constant bit-width, but can be used to implement operations with a smaller bit-width. For example, a 18x25-bit multiplier can also be used to implement 16x20-bit multiplication.

A way of mapping such elements in coarse grain synthesis is the wrap-extract-unwrap method:

wrap
: Identify candidate-cells in the circuit and wrap them in a cell with a constant wider bit-width using *techmap*. The wrappers use the same parameters as the original cell, so the information about the original width of the ports is preserved. Then use the *connwrappers* command to connect up the bit-extended in- and outputs of the wrapper cells.

extract
: Now all operations are encoded using the same bit-width as the coarse grain element. The *extract* command can be used to replace circuits with cells of the target architecture.

unwrap
: The remaining wrapper cell can be unwrapped using *techmap*.

Example: DSP48_MACC

This section details an example that shows how to map MACC operations of arbitrary size to MACC cells with a 18x25-bit multiplier and a 48-bit adder (such as the Xilinx DSP48 cells).

Preconditioning: `macc_xilinx_swap_map.v`

Make sure `A` is the smaller port on all multipliers

Todo

add/expand supporting text

Listing 3.23: `macc_xilinx_swap_map.v`

```
(* techmap_celltype = "$mul" *)
module mul_swap_ports (A, B, Y);

parameter A_SIGNED = 0;
parameter B_SIGNED = 0;
parameter A_WIDTH = 1;
parameter B_WIDTH = 1;
parameter Y_WIDTH = 1;

input [A_WIDTH-1:0] A;
input [B_WIDTH-1:0] B;
output [Y_WIDTH-1:0] Y;

wire _TECHMAP_FAIL_ = A_WIDTH <= B_WIDTH;

\$mul #(
        .A_SIGNED(B_SIGNED),
        .B_SIGNED(A_SIGNED),
        .A_WIDTH(B_WIDTH),
        .B_WIDTH(A_WIDTH),
        .Y_WIDTH(Y_WIDTH)
) _TECHMAP_REPLACE_ (
        .A(B),
        .B(A),
        .Y(Y)
);
```

(continues on next page)

(continued from previous page)

```
endmodule
```

Wrapping multipliers: `macc_xilinx_wrap_map.v`

Listing 3.24: `macc_xilinx_wrap_map.v`

```
(* techmap_celltype = "$mul" *)
module mul_wrap (A, B, Y);

parameter A_SIGNED = 0;
parameter B_SIGNED = 0;
parameter A_WIDTH = 1;
parameter B_WIDTH = 1;
parameter Y_WIDTH = 1;

input [A_WIDTH-1:0] A;
input [B_WIDTH-1:0] B;
output [Y_WIDTH-1:0] Y;

wire [17:0] A_18 = A;
wire [24:0] B_25 = B;
wire [47:0] Y_48;
assign Y = Y_48;

wire [1023:0] _TECHMAP_DO_ = "proc; clean";

reg _TECHMAP_FAIL_;
initial begin
        _TECHMAP_FAIL_ <= 0;
        if (A_SIGNED || B_SIGNED)
                _TECHMAP_FAIL_ <= 1;
        if (A_WIDTH < 4 || B_WIDTH < 4)
                _TECHMAP_FAIL_ <= 1;
        if (A_WIDTH > 18 || B_WIDTH > 25)
                _TECHMAP_FAIL_ <= 1;
        if (A_WIDTH*B_WIDTH < 100)
                _TECHMAP_FAIL_ <= 1;
end

\$__mul_wrapper #(
        .A_SIGNED(A_SIGNED),
        .B_SIGNED(B_SIGNED),
        .A_WIDTH(A_WIDTH),
        .B_WIDTH(B_WIDTH),
        .Y_WIDTH(Y_WIDTH)
) _TECHMAP_REPLACE_ (
        .A(A_18),
        .B(B_25),
        .Y(Y_48)
);
```

(continues on next page)

(continued from previous page)

```
endmodule
```

Wrapping adders: `macc_xilinx_wrap_map.v`

Listing 3.25: `macc_xilinx_wrap_map.v`

```
(* techmap_celltype = "$add" *)
module add_wrap (A, B, Y);

parameter A_SIGNED = 0;
parameter B_SIGNED = 0;
parameter A_WIDTH = 1;
parameter B_WIDTH = 1;
parameter Y_WIDTH = 1;

input [A_WIDTH-1:0] A;
input [B_WIDTH-1:0] B;
output [Y_WIDTH-1:0] Y;

wire [47:0] A_48 = A;
wire [47:0] B_48 = B;
wire [47:0] Y_48;
assign Y = Y_48;

wire [1023:0] _TECHMAP_DO_ = "proc; clean";

reg _TECHMAP_FAIL_;
initial begin
        _TECHMAP_FAIL_ <= 0;
        if (A_SIGNED || B_SIGNED)
                _TECHMAP_FAIL_ <= 1;
        if (A_WIDTH < 10 && B_WIDTH < 10)
                _TECHMAP_FAIL_ <= 1;
end

\$__add_wrapper #(
        .A_SIGNED(A_SIGNED),
        .B_SIGNED(B_SIGNED),
        .A_WIDTH(A_WIDTH),
        .B_WIDTH(B_WIDTH),
        .Y_WIDTH(Y_WIDTH)
) _TECHMAP_REPLACE_ (
        .A(A_48),
        .B(B_48),
        .Y(Y_48)
);

endmodule
```

Extract: `macc_xilinx_xmap.v`

Listing 3.26: `macc_xilinx_xmap.v`

```
module DSP48_MACC (a, b, c, y);

input [17:0] a;
input [24:0] b;
input [47:0] c;
output [47:0] y;

assign y = a*b + c;

endmodule
```

. . . simply use the same wrapping commands on this module as on the design to create a template for the *extract* command.

Unwrapping multipliers: `macc_xilinx_unwrap_map.v`

Listing 3.27: `$__mul_wrapper` module in `macc_xilinx_unwrap_map.v`

```
module \$__mul_wrapper (A, B, Y);

parameter A_SIGNED = 0;
parameter B_SIGNED = 0;
parameter A_WIDTH = 1;
parameter B_WIDTH = 1;
parameter Y_WIDTH = 1;

input [17:0] A;
input [24:0] B;
output [47:0] Y;

wire [A_WIDTH-1:0] A_ORIG = A;
wire [B_WIDTH-1:0] B_ORIG = B;
wire [Y_WIDTH-1:0] Y_ORIG;
assign Y = Y_ORIG;

\$mul #(
        .A_SIGNED(A_SIGNED),
        .B_SIGNED(B_SIGNED),
        .A_WIDTH(A_WIDTH),
        .B_WIDTH(B_WIDTH),
        .Y_WIDTH(Y_WIDTH)
) _TECHMAP_REPLACE_ (
        .A(A_ORIG),
        .B(B_ORIG),
        .Y(Y_ORIG)
);

endmodule
```

Unwrapping adders: `macc_xilinx_unwrap_map.v`

Listing 3.28: `$__add_wrapper` module in `macc_xilinx_unwrap_map.v`

```
module \$__add_wrapper (A, B, Y);

parameter A_SIGNED = 0;
parameter B_SIGNED = 0;
parameter A_WIDTH = 1;
parameter B_WIDTH = 1;
parameter Y_WIDTH = 1;

input [47:0] A;
input [47:0] B;
output [47:0] Y;

wire [A_WIDTH-1:0] A_ORIG = A;
wire [B_WIDTH-1:0] B_ORIG = B;
wire [Y_WIDTH-1:0] Y_ORIG;
assign Y = Y_ORIG;

\$add #(
        .A_SIGNED(A_SIGNED),
        .B_SIGNED(B_SIGNED),
        .A_WIDTH(A_WIDTH),
        .B_WIDTH(B_WIDTH),
        .Y_WIDTH(Y_WIDTH)
) _TECHMAP_REPLACE_ (
        .A(A_ORIG),
        .B(B_ORIG),
        .Y(Y_ORIG)
);

endmodule
```

Listing 3.29: `test1` of `macc_xilinx_test.v`

```
module test1(a, b, c, d, e, f, y);
    input [19:0] a, b, c;
    input [15:0] d, e, f;
    output [41:0] y;
    assign y = a*b + c*d + e*f;
endmodule
```

Listing 3.30: `test2` of `macc_xilinx_test.v`

```
module test2(a, b, c, d, e, f, y);
    input [19:0] a, b, c;
    input [15:0] d, e, f;
    output [41:0] y;
    assign y = a*b + (c*d + e*f);
endmodule
```

Wrapping in `test1`:

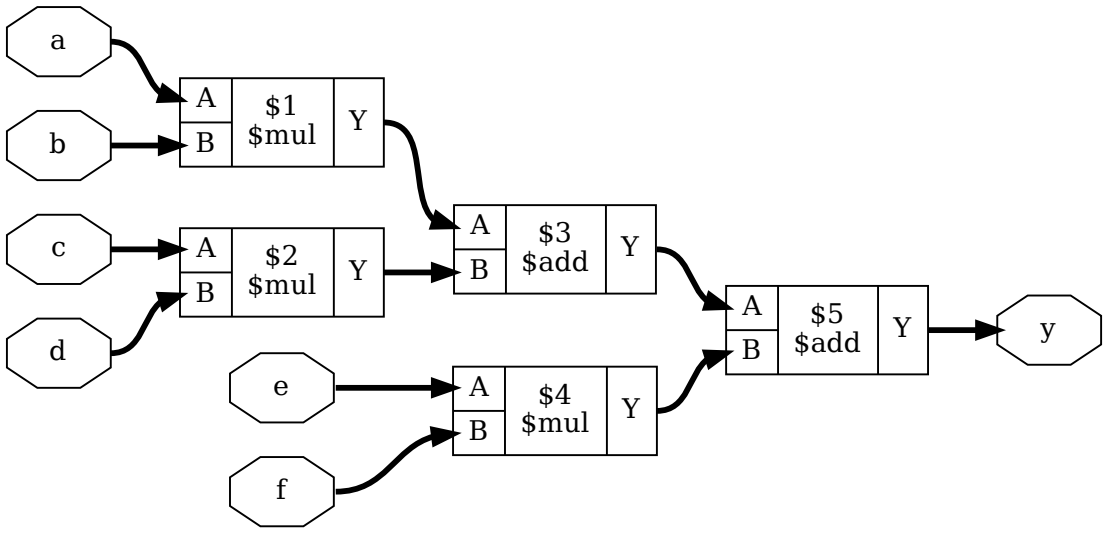
a
b
c
d
e
f
A
B
$1
$mul
Y
$2
$mul
$3
$add
$4
$mul
$5
$add
y

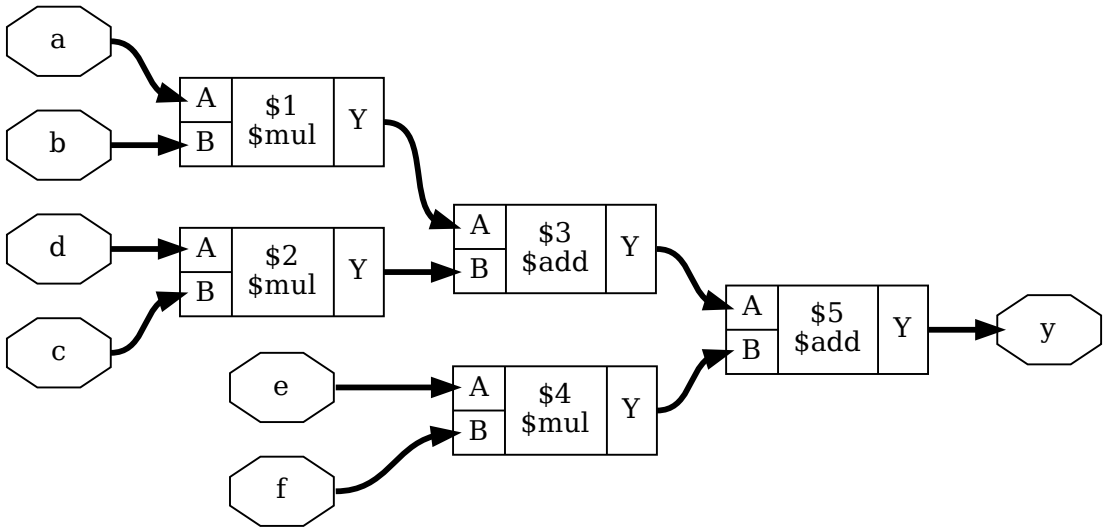
a
b
d
c
e
f
A
B
$1
$mul
Y
$2
$mul
$3
$add
$4
$mul
$5
$add
y

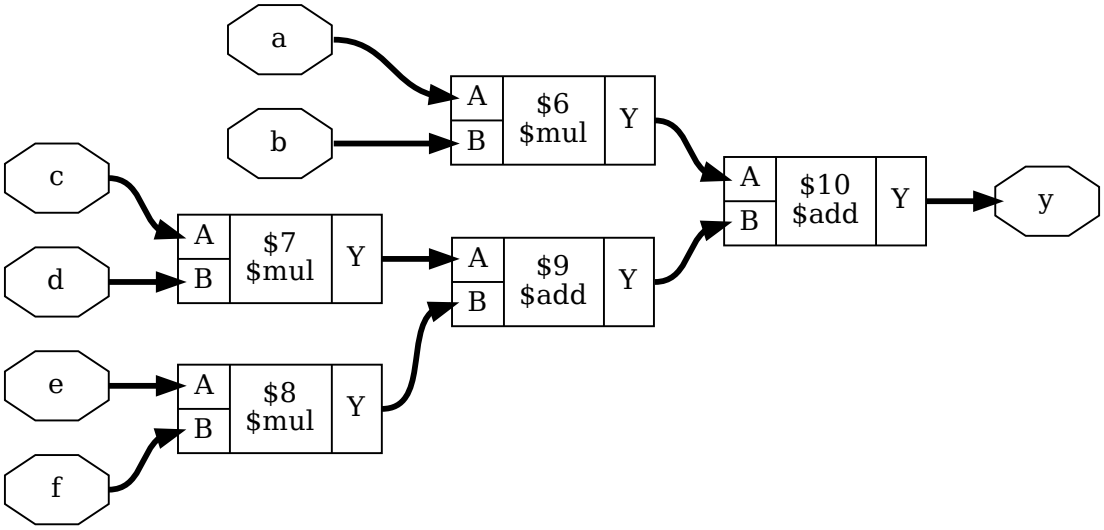
a
b
c
d
e
f
A
B
$6
$mul
Y
$7
$mul
$8
$mul
$9
$add
$10
$add
y

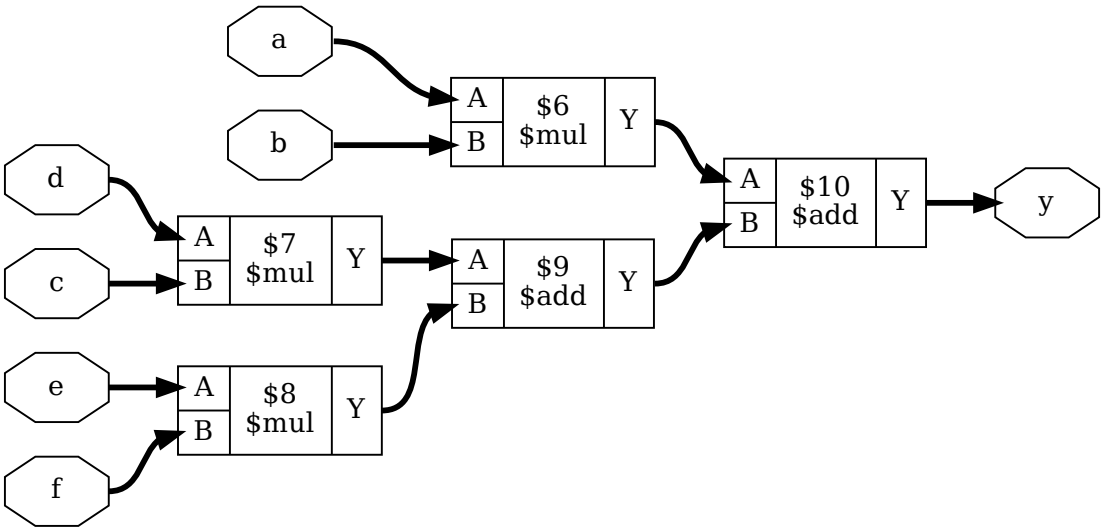
a
b
d
c
e
f
A
B
$6
$mul
Y
$7
$mul
$8
$mul
$9
$add
$10
$add
y

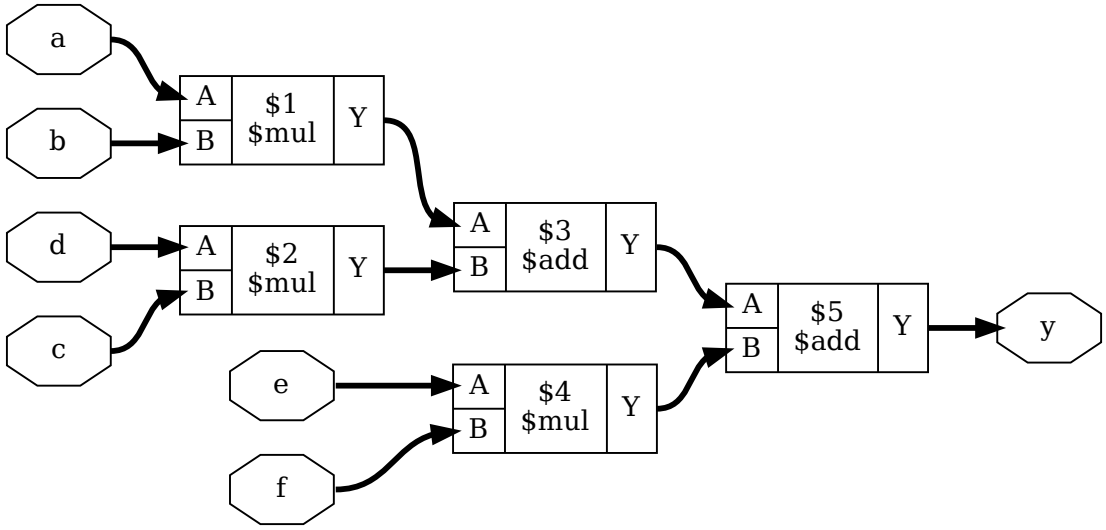


```
techmap -map macc_xilinx_wrap_map.v

connwrappers -unsigned $__mul_wrapper Y Y_WIDTH \
             -unsigned $__add_wrapper Y Y_WIDTH;;
```

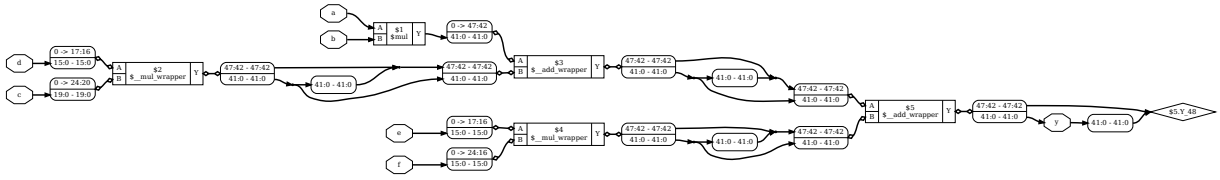

Wrapping in `test2`:

```
techmap -map macc_xilinx_wrap_map.v

connwrappers -unsigned $__mul_wrapper Y Y_WIDTH \
             -unsigned $__add_wrapper Y Y_WIDTH;;
```

Extract in `test1`:

```
design -push
read_verilog macc_xilinx_xmap.v
techmap -map macc_xilinx_swap_map.v
techmap -map macc_xilinx_wrap_map.v;;
design -save __macc_xilinx_xmap
design -pop

extract -constports -ignore_parameters \
```

(continues on next page)

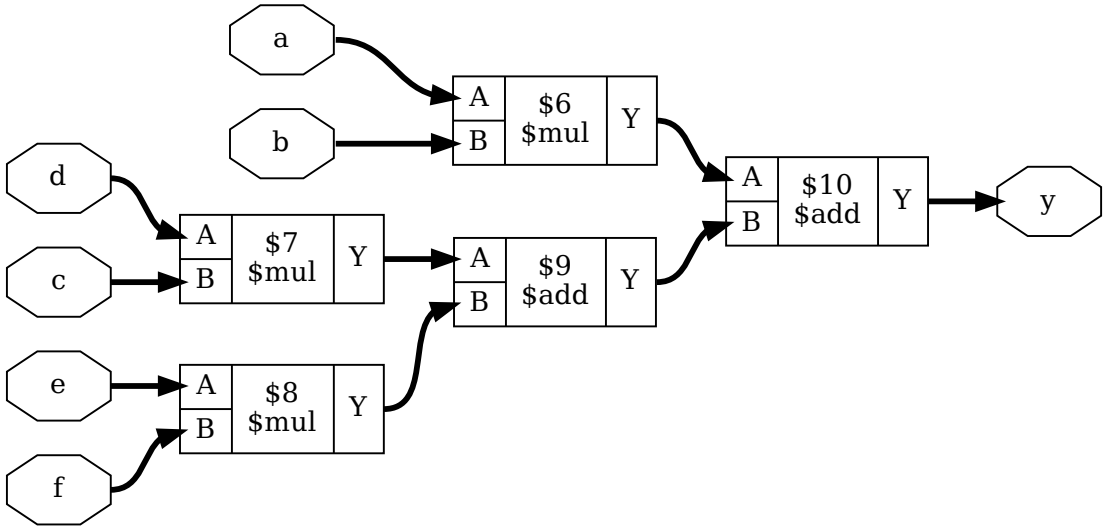
a
b
d
c
e
f
A
B
$6
$mul
Y
$7
$mul
$8
$mul
$9
$add
$10
$add
y

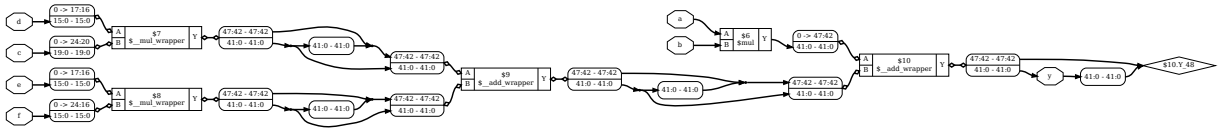

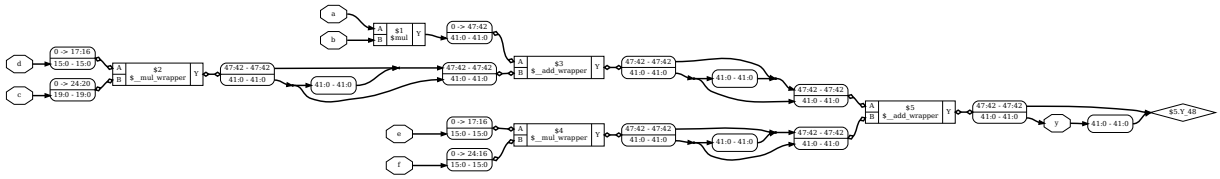

(continued from previous page)

```
        -map %__macc_xilinx_xmap       \
        -swap $__add_wrapper A,B ;;
```

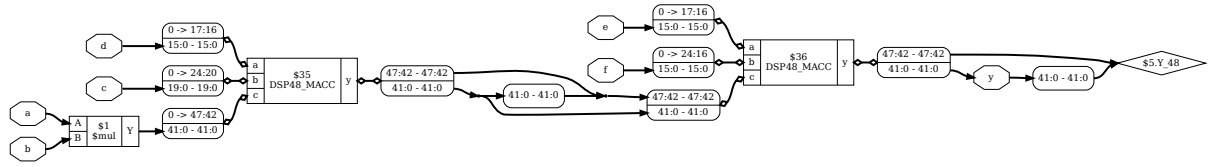

Extract in `test2`:

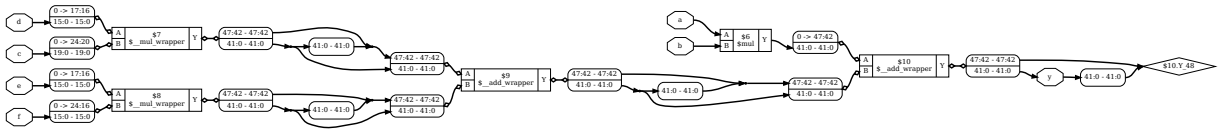


```
design -push
read_verilog macc_xilinx_xmap.v
techmap -map macc_xilinx_swap_map.v
techmap -map macc_xilinx_wrap_map.v;;
design -save __macc_xilinx_xmap
design -pop

extract -constports -ignore_parameters \
        -map %__macc_xilinx_xmap       \
        -swap $__add_wrapper A,B ;;
```

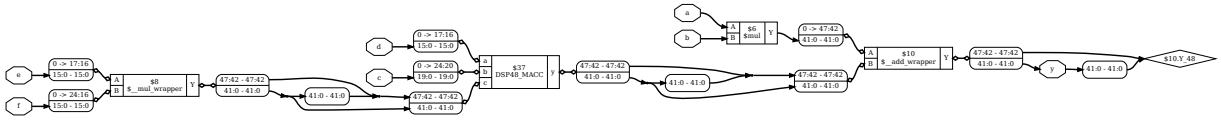

Unwrap in `test2`:

```
techmap -map macc_xilinx_unwrap_map.v;;
```

3.1.8 The ABC toolbox

ABC, from the University of California, Berkeley, is a logic toolbox used for fine-grained optimisation and LUT mapping.

Yosys has two different commands, which both use this logic toolbox, but use it in different ways.

The *abc* pass can be used for both ASIC (e.g. `abc -liberty`) and FPGA (`abc -lut`) mapping, but this page will focus on FPGA mapping.

The *abc9* pass generally provides superior mapping quality due to being aware of combination boxes and DFF and LUT timings, giving it a more global view of the mapping problem.

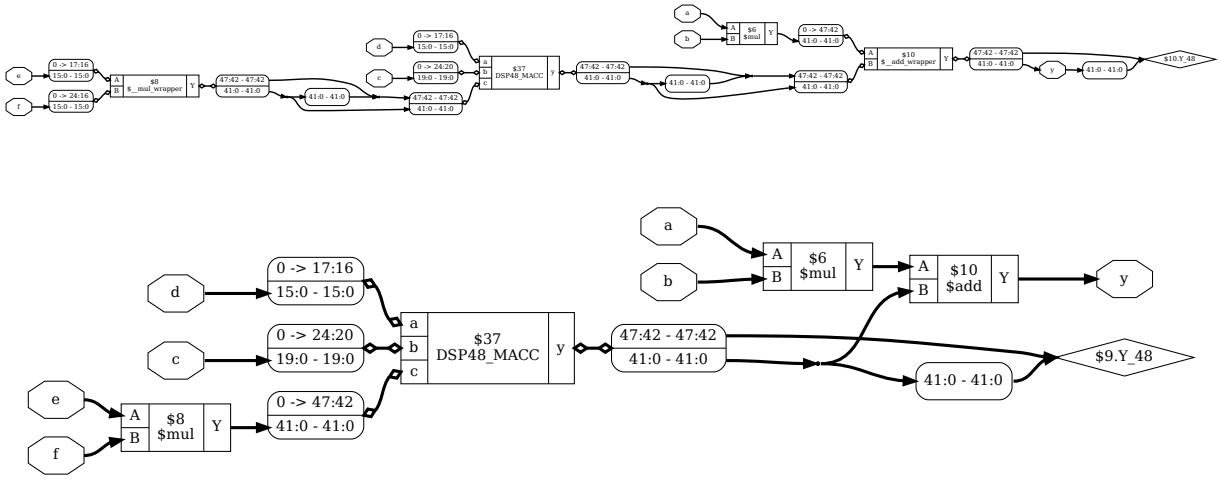

ABC: the unit delay model, simple and efficient

The *abc* pass uses a highly simplified view of an FPGA:

- An FPGA is made up of a network of inputs that connect through LUTs to a network of outputs. These inputs may actually be I/O pins, D flip-flops, memory blocks or DSPs, but ABC is unaware of this.
- Each LUT has 1 unit of delay between an input and its output, and this applies for all inputs of a LUT, and for all sizes of LUT up to the maximum LUT size allowed; e.g. the delay between the input of a LUT2 and its output is the same as the delay between the input of a LUT6 and its output.
- A LUT may take up a variable number of area units. This is constant for each size of LUT; e.g. a LUT4 may take up 1 unit of area, but a LUT5 may take up 2 units of area, but this applies for all LUT4s and LUT5s.

This is known as the "unit delay model", because each LUT uses one unit of delay.

From this view, the problem ABC has to solve is finding a mapping of the network to LUTs that has the lowest delay, and then optimising the mapping for size while maintaining this delay.

This approach has advantages:

- It is simple and easy to implement.
- Working with unit delays is fast to manipulate.
- It reflects *some* FPGA families, for example, the iCE40HX/LP fits the assumptions of the unit delay model quite well (almost all synchronous blocks, except for adders).

But this approach has drawbacks, too:

- The network of inputs and outputs with only LUTs means that a lot of combinational cells (multipliers and LUTRAM) are invisible to the unit delay model, meaning the critical path it optimises for is not necessarily the actual critical path.
- LUTs are implemented as multiplexer trees, so there is a delay caused by the result propagating through the remaining multiplexers. This means the assumption of delay being equal isn't true in physical hardware, and is proportionally larger for larger LUTs.
- Even synchronous blocks have arrival times (propagation delay between clock edge to output changing) and setup times (requirement for input to be stable before clock edge) which affect the delay of a path.

ABC9: the generalised delay model, realistic and flexible

ABC9 uses a more detailed and accurate model of an FPGA:

- An FPGA is made up of a network of inputs that connect through LUTs and combinational boxes to a network of outputs. These boxes have specified delays between inputs and outputs, and may have an associated network ("white boxes") or not ("black boxes"), but must be treated as a whole.
- Each LUT has a specified delay between an input and its output in arbitrary delay units, and this varies for all inputs of a LUT and for all sizes of LUT, but each size of LUT has the same associated delay; e.g. the delay between input A and output is different between a LUT2 and a LUT6, but is constant for all LUT6s.
- A LUT may take up a variable number of area units. This is constant for each size of LUT; e.g. a LUT4 may take up 1 unit of area, but a LUT5 may take up 2 units of area, but this applies for all LUT4s and LUT5s.

This is known as the "generalised delay model", because it has been generalised to arbitrary delay units. ABC9 doesn't actually care what units you use here, but the Yosys convention is picoseconds. Note the introduction of boxes as a concept. While the generalised delay model does not require boxes, they naturally fit into it to represent combinational delays. Even synchronous delays like arrival and setup can be emulated with combinational boxes that act as a delay. This is further extended to white boxes, where the mapper is able to see inside a box, and remove orphan boxes with no outputs, such as adders.

Again, ABC9 finds a mapping of the network to LUTs that has the lowest delay, and then minimises it to find the lowest area, but it has a lot more information to work with about the network.

The result here is that ABC9 can remove boxes (like adders) to reduce area, optimise better around those boxes, and also permute inputs to give the critical path the fastest inputs.

Todo

more about logic minimization & register balancing et al with ABC

Setting up a flow for ABC9

Much of the configuration comes from attributes and `specify` blocks in Verilog simulation models.

`specify` syntax

Since `specify` is a relatively obscure part of the Verilog standard, a quick guide to the syntax:

```
specify                          // begins a specify block
  (A => B) = 123;                // simple combinational path from A to B with a delay␣
↪of 123.
  (A *> B) = 123;                // simple combinational path from A to all bits of B␣
↪with a delay of 123 for all.
  if (FOO) (A => B) = 123;       // paths may apply under specific conditions.
  (posedge CLK => (Q : D)) = 123; // combinational path triggered on the positive edge␣
↪of CLK; used for clock-to-Q arrival paths.
  $setup(A, posedge CLK, 123);   // setup constraint for an input relative to a clock.
endspecify                       // ends a specify block
```

By convention, all delays in `specify` blocks are in integer picoseconds. Files containing `specify` blocks should be read with the `-specify` option to *read_verilog* so that they aren't skipped.

LUTs

LUTs need to be annotated with an `(* abc9_lut=N *)` attribute, where `N` is the relative area of that LUT model. For example, if an architecture can combine LUTs to produce larger LUTs, then the combined LUTs would have increasingly larger `N`. Conversely, if an architecture can split larger LUTs into smaller LUTs, then the smaller LUTs would have smaller `N`.

LUTs are generally specified with simple combinational paths from the LUT inputs to the LUT output.

DFFs

DFFs should be annotated with an `(* abc9_flop *)` attribute, however ABC9 has some specific requirements for this to be valid: - the DFF must initialise to zero (consider using *dfflegalize* to ensure this). - the DFF cannot have any asynchronous resets/sets (see the simplification idiom and the Boxes section for what to do here).

It is worth noting that in pure `abc9` mode, only the setup and arrival times are passed to ABC9 (specifically, they are modelled as buffers with the given delay). In `abc9 -dff`, the flop itself is passed to ABC9, permitting sequential optimisations.

Some vendors have universal DFF models which include async sets/resets even when they're unused. Therefore *the simplification idiom* exists to handle this: by using a `techmap` file to discover flops which have a constant driver to those asynchronous controls, they can be mapped into an intermediate, simplified flop which qualifies as an `(* abc9_flop *)`, ran through *abc9*, and then mapped back to the original flop. This is used in *synth_intel_alm* and *synth_quicklogic* for the PolarPro3.

DFFs are usually specified to have setup constraints against the clock on the input signals, and an arrival time for the `Q` output.

Boxes

A "box" is a purely-combinational piece of hard logic. If the logic is exposed to ABC9, it's a "whitebox", otherwise it's a "blackbox". Carry chains would be best implemented as whiteboxes, but a DSP would be best implemented as a blackbox (multipliers are too complex to easily work with). LUT RAMs can be implemented as whiteboxes too.

Boxes are arguably the biggest advantage that ABC9 has over ABC: by being aware of carry chains and DSPs, it avoids optimising for a path that isn't the actual critical path, while the generally-longer paths result in ABC9 being able to reduce design area by mapping other logic to larger-but-slower cells.

3.1.9 Mapping to cell libraries

While much of this documentation focuses on the use of Yosys with FPGAs, it is also possible to map to cell libraries which can be used in designing ASICs. This section will cover a brief example project, available in the Yosys source code under `docs/source/code_examples/intro/`. The project contains a simple ASIC synthesis script (`counter.ys`), a digital design written in Verilog (`counter.v`), and a simple CMOS cell library (`mycells.lib`). Many of the early steps here are already covered in more detail in the *Synthesis starter* document.

> **Note**
>
> The `counter.ys` script includes the commands used to generate the images in this document. Code snippets in this document skip these commands; including line numbers to allow the reader to follow along with the source.
>
> To learn more about these commands, check out *A look at the show command*.

A simple counter

First, let's quickly look at the design:

Listing 3.31: `counter.v`

```
module counter (clk, rst, en, count);

        input clk, rst, en;
        output reg [1:0] count;

        always @(posedge clk)
                if (rst)
                        count <= 2'd0;
                else if (en)
                        count <= count + 2'd1;

endmodule
```

This is a simple counter with reset and enable. If the reset signal, `rst`, is high then the counter will reset to 0. Otherwise, if the enable signal, `en`, is high then the `count` register will increment by 1 each rising edge of the clock, `clk`.

Loading the design

Listing 3.32: `counter.ys` - read design

```
# read design
read_verilog counter.v
hierarchy -check -top counter
```

Our circuit now looks like this:

Coarse-grain representation

Listing 3.33: `counter.ys` - the high-level stuff

```
# the high-level stuff
proc; opt
memory; opt
fsm; opt
```

Logic gate mapping

Listing 3.34: `counter.ys` - mapping to internal cell library

```
# mapping to internal cell library
techmap; opt
```

Mapping to hardware

For this example, we are using a Liberty file to describe a cell library which our internal cell library will be mapped to:

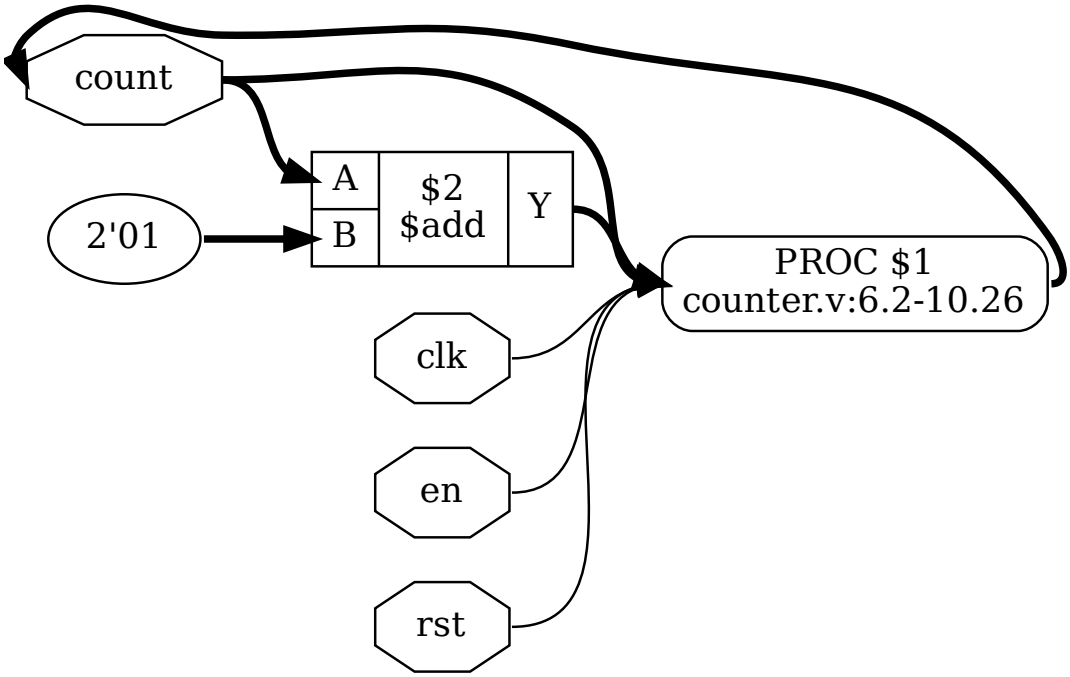

Fig. 3.7: `counter` after *hierarchy*

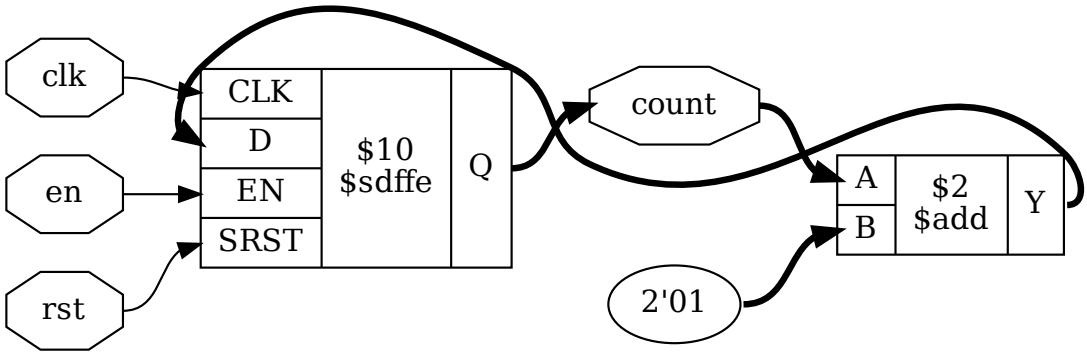

Fig. 3.8: Coarse-grain representation of the `counter` module

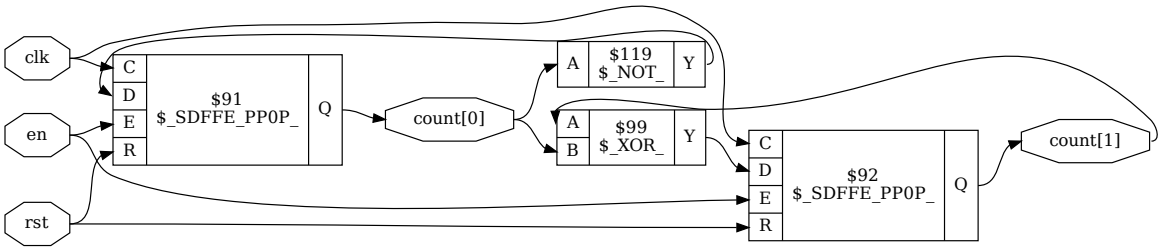

Fig. 3.9: `counter` after *techmap*

Todo

find a Liberty pygments style?

Listing 3.35: `mycells.lib`

```
library(demo) {
  cell(BUF) {
    area: 6;
    pin(A) { direction: input; }
    pin(Y) { direction: output;
             function: "A"; }
  }
  cell(NOT) {
    area: 3;
    pin(A) { direction: input; }
    pin(Y) { direction: output;
             function: "A'"; }
  }
  cell(NAND) {
    area: 4;
    pin(A) { direction: input; }
    pin(B) { direction: input; }
    pin(Y) { direction: output;
             function: "(A*B)'"; }
  }
  cell(NOR) {
    area: 4;
    pin(A) { direction: input; }
    pin(B) { direction: input; }
    pin(Y) { direction: output;
             function: "(A+B)'"; }
  }
  cell(DFF) {
    area: 18;
    ff(IQ, IQN) { clocked_on: C;
                  next_state: D; }
    pin(C) { direction: input;
```

(continues on next page)

(continued from previous page)

```
                clock: true; }
    pin(D) { direction: input; }
    pin(Q) { direction: output;
             function: "IQ"; }
  }
}
```

Recall that the Yosys built-in logic gate types are *$_NOT_* , *$_AND_* , *$_OR_* , *$_XOR_* , and *$_MUX_* with an assortment of dff memory types. *mycells.lib* defines our target cells as `BUF`, `NOT`, `NAND`, `NOR`, and `DFF`. Mapping between these is performed with the commands *dfflibmap* and *abc* as follows:

Listing 3.36: `counter.ys` - mapping to hardware

```
dfflibmap -liberty mycells.lib

# mapping logic to mycells.lib
abc -liberty mycells.lib

# cleanup
clean
```

The final version of our `counter` module looks like this:

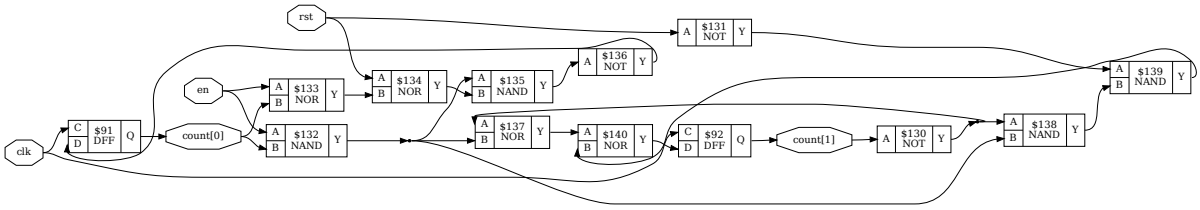

Fig. 3.10: `counter` after hardware cell mapping

Before finally being output as a verilog file with *write_verilog*, which can then be loaded into another tool:

Listing 3.37: `counter.ys` - write synthesized design

```
# write synthesized design
write_verilog synth.v
```

3.2 More scripting

Todo

brief overview for the more scripting index

Todo

troubleshooting document(?)

3.2.1 Loading a design

keyword: Frontends

- *read_verilog - read modules from Verilog file*

Todo

include `read_verilog <<EOF`, also other methods of loading designs

```
read_verilog file1.v
read_verilog -I include_dir -D enable_foo -D WIDTH=12 file2.v
read_verilog -lib cell_library.v

verilog_defaults -add -I include_dir
read_verilog file3.v
read_verilog file4.v
verilog_defaults -clear

verilog_defaults -push
verilog_defaults -add -I include_dir
read_verilog file5.v
read_verilog file6.v
verilog_defaults -pop
```

Todo

more info on other `read_*` commands, also is this the first time we mention verific?

Note

The Verific frontend for Yosys, which provides the *verific* command, requires Yosys to be built with Verific. For full functionality, custom modifications to the Verific source code from YosysHQ are required, but limited useability can be achieved with some stock Verific builds. Check *Compiling with Verific library* for more.

Others:

- *read - load HDL designs*
- GHDL plugin for VHDL
- *read_rtlil - read modules from RTLIL file* (direct textual representation of Yosys internal state)
- *read_aiger - read AIGER file*
- *read_blif - read BLIF file*
- *read_json - read JSON file*
- *read_liberty - read cells from liberty file*

3.2.2 Selections

The selection framework

Todo

reduce overlap with *Scripting in Yosys* select section

The *select* command can be used to create a selection for subsequent commands. For example:

```
select foobar         # select the module foobar
delete                # delete selected objects
```

Normally the *select* command overwrites a previous selection. The commands `select -add` and `select -del` can be used to add or remove objects from the current selection.

The command `select -clear` can be used to reset the selection to the default, which is a complete selection of everything in the current module.

This selection framework can also be used directly in many other commands. Whenever a command has `[selection]` as last argument in its usage help, this means that it will use the engine behind the *select* command to evaluate additional arguments and use the resulting selection instead of the selection created by the last *select* command.

For example, the command *delete* will delete everything in the current selection; while `delete foobar` will only delete the module foobar. If no *select* command has been made, then the "current selection" will be the whole design.

Note

Many of the examples on this page make use of the *show* command to visually demonstrate the effect of selections. For a more detailed look at this command, refer to *A look at the show command*.

How to make a selection

Selection by object name

The easiest way to select objects is by object name. This is usually only done in synthesis scripts that are hand-tailored for a specific design.

```
select foobar         # select module foobar
select foo*           # select all modules whose names start with foo
select foo*/bar*      # select all objects matching bar* from modules matching foo*
select */clk          # select objects named clk from all modules
```

Module and design context

Commands can be executed in *module/* or *design/* context. Until now, all commands have been executed in design context. The *cd* command can be used to switch to module context.

In module context, all commands only effect the active module. Objects in the module are selected without the `<module_name>/` prefix. For example:

```
cd foo                # switch to module foo
delete bar            # delete object foo/bar

cd mycpu              # switch to module mycpu
dump reg_*            # print details on all objects whose names start with reg_

cd ..                 # switch back to design
```

Note: Most synthesis scripts never switch to module context. But it is a very powerful tool which we explore more in *Interactive design investigation*.

Selecting by object property or type

Special patterns can be used to select by object property or type. For example:

- select all wires whose names start with `reg_`: `select w:reg_*`
- select all objects with the attribute `foobar` set: `select a:foobar`
- select all objects with the attribute `foobar` set to 42: `select a:foobar=42`
- select all modules with the attribute `blabla` set: `select A:blabla`
- select all *`$add`* cells from the module foo: `select foo/t:$add`

A complete list of pattern expressions can be found in *select - modify and view the list of selected objects*.

Operations on selections

Combining selections

The *`select`* command is actually much more powerful than it might seem at first glance. When it is called with multiple arguments, each argument is evaluated and pushed separately on a stack. After all arguments have been processed it simply creates the union of all elements on the stack. So `select t:$add a:foo` will select all *`$add`* cells and all objects with the `foo` attribute set:

Listing 3.38: Test module for operations on selections

```
module foobaraddsub(a, b, c, d, fa, fs, ba, bs);
  input [7:0] a, b, c, d;
  output [7:0] fa, fs, ba, bs;
  assign fa = a + (* foo *) b;
  assign fs = a - (* foo *) b;
  assign ba = c + (* bar *) d;
  assign bs = c - (* bar *) d;
endmodule
```

Listing 3.39: Output for command `select t:$add a:foo -list` on Listing 3.38

```
yosys> select t:$add a:foo -list
foobaraddsub/$add$foobaraddsub.v:6$3
foobaraddsub/$sub$foobaraddsub.v:5$2
foobaraddsub/$add$foobaraddsub.v:4$1
```

In many cases simply adding more and more stuff to the selection is an ineffective way of selecting the interesting part of the design. Special arguments can be used to combine the elements on the stack. For

example the %i arguments pops the last two elements from the stack, intersects them, and pushes the result back on the stack. So `select t:$add a:foo %i` will select all *$add* cells that have the `foo` attribute set:

Listing 3.40: Output for command `select t:$add a:foo %i -list` on Listing 3.38

```
yosys> select t:$add a:foo %i -list
foobaraddsub/$add$foobaraddsub.v:4$1
```

Some of the special %-codes:

- %u: union of top two elements on stack – pop 2, push 1
- %d: difference of top two elements on stack – pop 2, push 1
- %i: intersection of top two elements on stack – pop 2, push 1
- %n: inverse of top element on stack – pop 1, push 1

See *select - modify and view the list of selected objects* for the full list.

Expanding selections

Listing 3.41 uses the Yosys non-standard `{... *}` syntax to set the attribute `sumstuff` on all cells generated by the first assign statement. (This works on arbitrary large blocks of Verilog code and can be used to mark portions of code for analysis.)

Listing 3.41: Another test module for operations on selections

```
module sumprod(a, b, c, sum, prod);

  input [7:0] a, b, c;
  output [7:0] sum, prod;

  {* sumstuff *}
  assign sum = a + b + c;
  {* *}

  assign prod = a * b * c;

endmodule
```

Selecting `a:sumstuff` in this module will yield the following circuit diagram:

As only the cells themselves are selected, but not the temporary wire `$1_Y`, the two adders are shown as two disjunct parts. This can be very useful for global signals like clock and reset signals: just unselect them using a command such as `select -del clk rst` and each cell using them will get its own net label.

In this case however we would like to see the cells connected properly. This can be achieved using the %x action, that broadens the selection, i.e. for each selected wire it selects all cells connected to the wire and vice versa. So `show a:sumstuff %x` yields the diagram shown in Fig. 3.12:

Selecting logic cones

Fig. 3.12 shows what is called the `input cone` of `sum`, i.e. all cells and signals that are used to generate the signal `sum`. The %ci action can be used to select the input cones of all object in the top selection in the stack maintained by the *select* command.

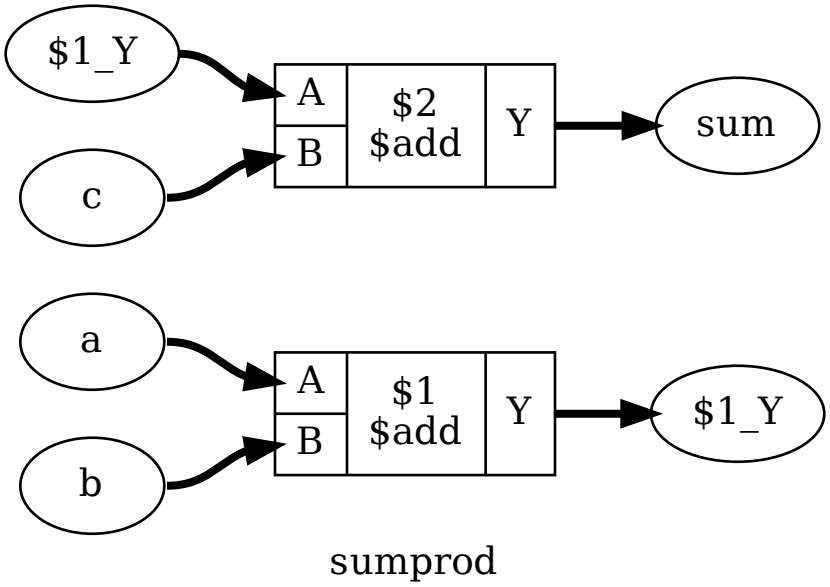

Fig. 3.11: Output of `show a:sumstuff` on Listing 3.41

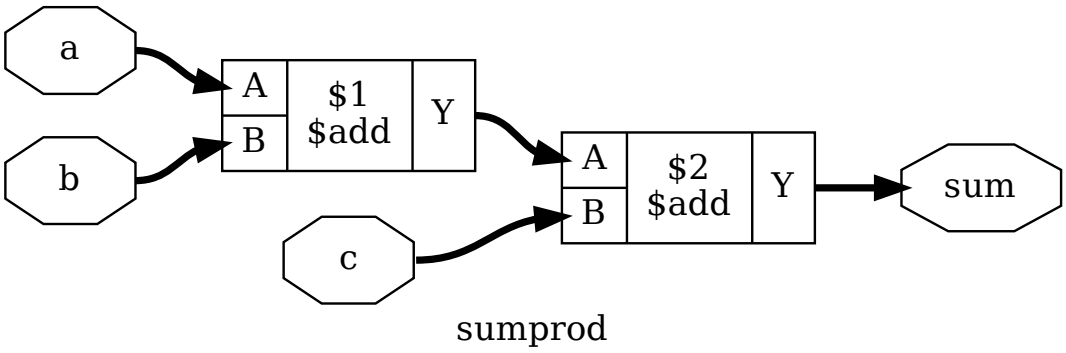

Fig. 3.12: Output of `show a:sumstuff %x` on Listing 3.41

As with the `%x` action, these commands broaden the selection by one "step". But this time the operation only works against the direction of data flow. That means, wires only select cells via output ports and cells only select wires via input ports.

The following sequence of diagrams demonstrates this step-wise expansion:

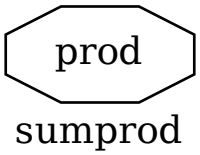

Fig. 3.13: Output of `show prod` on Listing 3.41

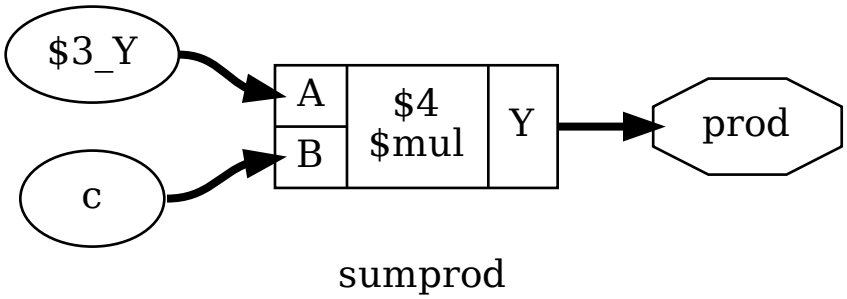

Fig. 3.14: Output of `show prod %ci` on Listing 3.41

Notice the subtle difference between `show prod %ci` and `show prod %ci %ci`. Both images show the *`$mul`* cell driven by some inputs `$3_Y` and `c`. However it is not until the second image, having called `%ci` the second time, that *`show`* is able to distinguish between `$3_Y` being a wire and `c` being an input. We can see this better with the *`dump`* command instead:

Listing 3.42: Output of `dump prod %ci`

```
attribute \src "sumprod.v:4.21-4.25"
wire width 8 output 5 \prod

attribute \src "sumprod.v:10.17-10.26"
cell $mul $mul$sumprod.v:10$4
  parameter \A_SIGNED 0
  parameter \A_WIDTH 8
```

(continues on next page)

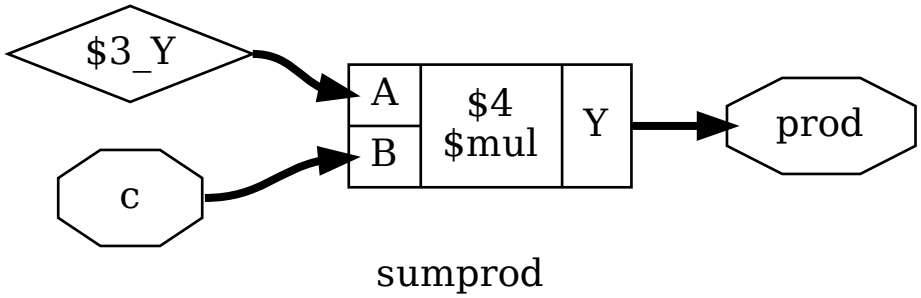

Fig. 3.15: Output of `show prod %ci %ci` on Listing 3.41

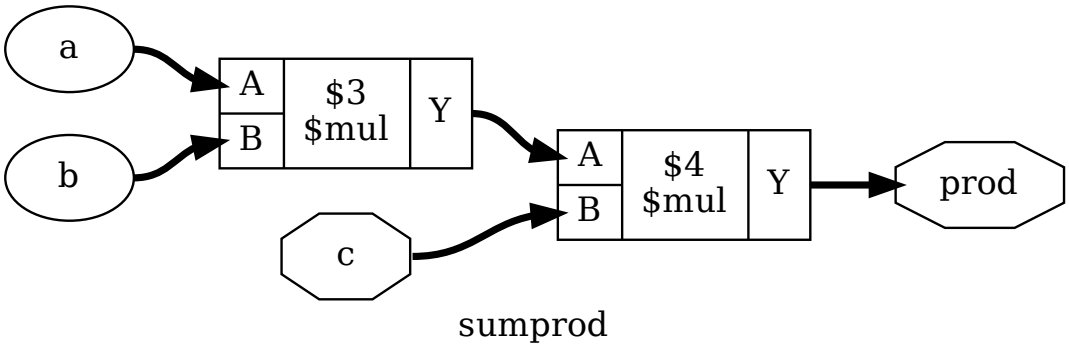

Fig. 3.16: Output of `show prod %ci %ci %ci` on Listing 3.41

(continued from previous page)

```
    parameter \B_SIGNED 0
    parameter \B_WIDTH 8
    parameter \Y_WIDTH 8
    connect \A $mul$sumprod.v:10$3_Y
    connect \B \c
    connect \Y \prod
  end
```

Listing 3.43: Output of `dump prod %ci %ci`

```
  attribute \src "sumprod.v:10.17-10.22"
  wire width 8 $mul$sumprod.v:10$3_Y

  attribute \src "sumprod.v:3.21-3.22"
  wire width 8 input 3 \c

  attribute \src "sumprod.v:4.21-4.25"
  wire width 8 output 5 \prod

  attribute \src "sumprod.v:10.17-10.26"
  cell $mul $mul$sumprod.v:10$4
    parameter \A_SIGNED 0
    parameter \A_WIDTH 8
    parameter \B_SIGNED 0
    parameter \B_WIDTH 8
    parameter \Y_WIDTH 8
    connect \A $mul$sumprod.v:10$3_Y
    connect \B \c
    connect \Y \prod
  end
```

When selecting many levels of logic, repeating `%ci` over and over again can be a bit dull. So there is a shortcut for that: the number of iterations can be appended to the action. So for example the action `%ci3` is identical to performing the `%ci` action three times.

The action `%ci*` performs the `%ci` action over and over again until it has no effect anymore.

Advanced logic cone selection

In most cases there are certain cell types and/or ports that should not be considered for the `%ci` action, or we only want to follow certain cell types and/or ports. This can be achieved using additional patterns that can be appended to the `%ci` action.

Lets consider Listing 3.44. It serves no purpose other than being a non-trivial circuit for demonstrating some of the advanced Yosys features. This code is available in `docs/source/code_examples/selections` of the Yosys source repository.

Listing 3.44: `memdemo.v`

```
module memdemo(clk, d, y);

input clk;
input [3:0] d;
```

(continues on next page)

(continued from previous page)

```
output reg [3:0] y;

integer i;
reg [1:0] s1, s2;
reg [3:0] mem [0:3];

always @(posedge clk) begin
    for (i = 0; i < 4; i = i+1)
        mem[i] <= mem[(i+1) % 4] + mem[(i+2) % 4];
    { s2, s1 } = d ? { s1, s2 } ^ d : 4'b0;
    mem[s1] <= d;
    y <= mem[s2];
end

endmodule
```

The script `memdemo.ys` is used to generate the images included here. Let's look at the first section:

Listing 3.45: Synthesizing *memdemo.v*

```
read_verilog memdemo.v
prep -top memdemo; memory; opt
```

This loads Listing 3.44 and synthesizes the included module. Note that this code can be copied and run directly in a Yosys command line session, provided `memdemo.v` is in the same directory. We can now change to the `memdemo` module with `cd memdemo`, and call *`show`* to see the diagram in Fig. 3.17.

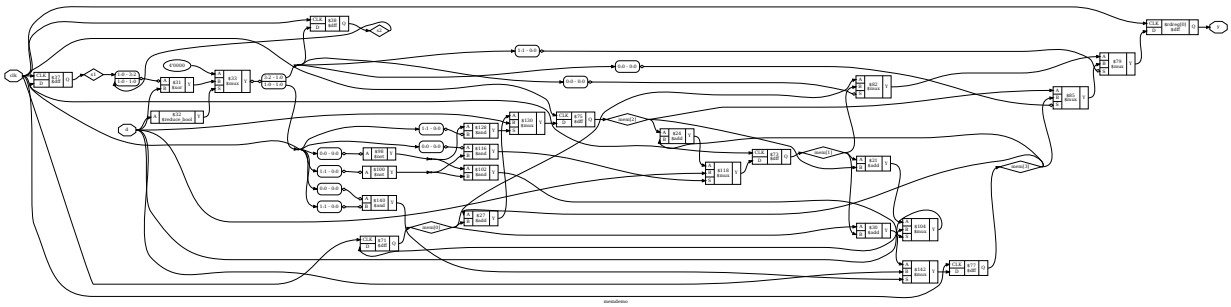

Fig. 3.17: Complete circuit diagram for the design shown in Listing 3.44

There's a lot going on there, but maybe we are only interested in the tree of multiplexers that select the output value. Let's start by just showing the output signal, `y`, and its immediate predecessors. Remember *Selecting logic cones* from above, we can use `show y %ci2`:

From this we would learn that `y` is driven by a *`$dff`* cell, that `y` is connected to the output port `Q`, that the `clk` signal goes into the `CLK` input port of the cell, and that the data comes from an auto-generated wire into the input `D` of the flip-flop cell (indicated by the `$` at the start of the name). Let's go a bit further now and try `show y %ci5`:

That's starting to get a bit messy, so maybe we want to ignore the mux select inputs. To add a pattern we add a colon followed by the pattern to the `%ci` action. The pattern itself starts with `-` or `+`, indicating if it is an include or exclude pattern, followed by an optional comma separated list of cell types, followed by an optional comma separated list of port names in square brackets. In this case, we want to exclude the `S` port of the *`$mux`* cell type with `show y %ci5:-$mux[S]`:

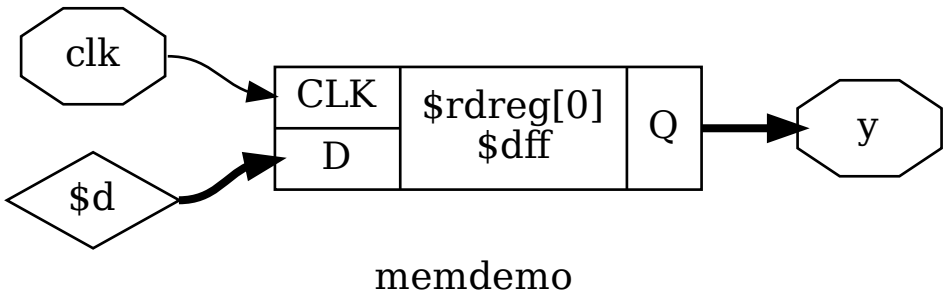

Fig. 3.18: Output of `show y %ci2`

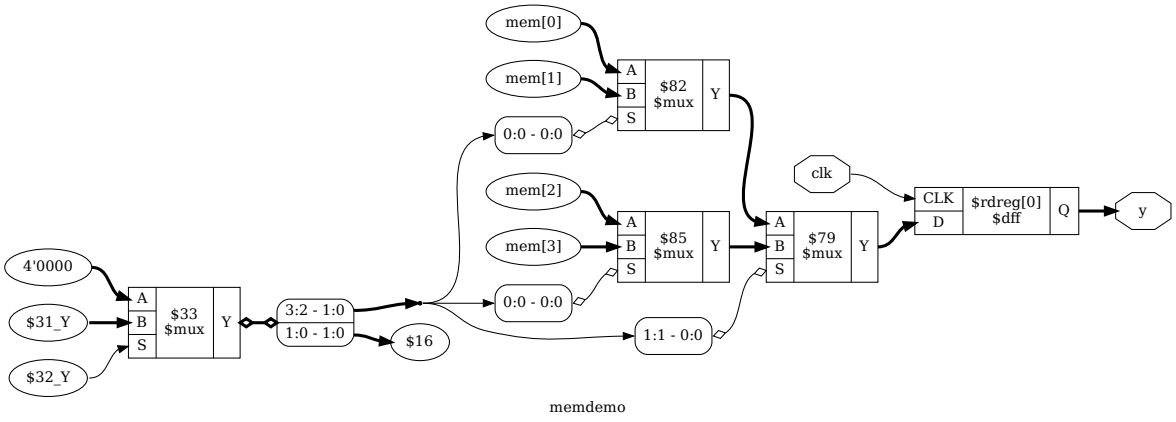

Fig. 3.19: Output of `show y %ci5`

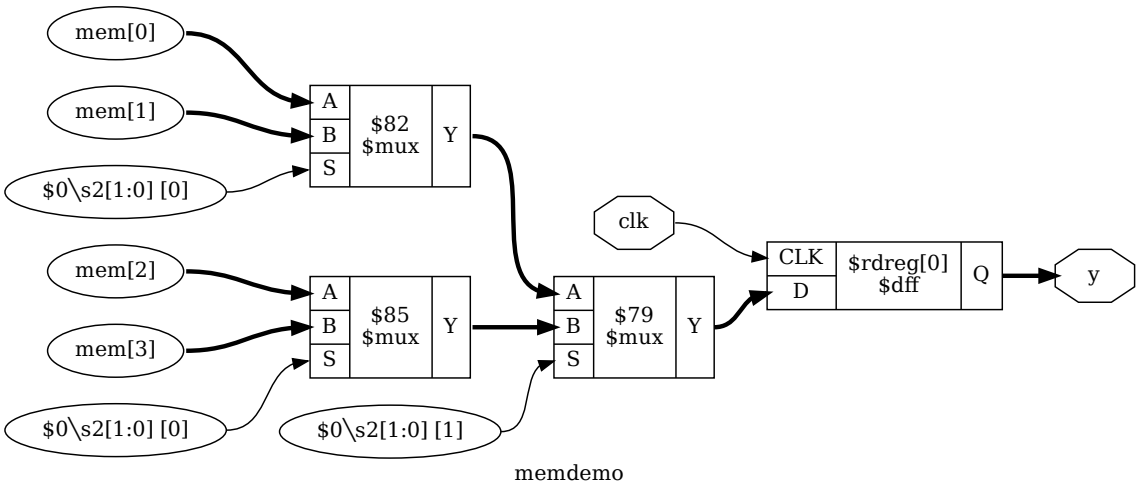

Fig. 3.20: Output of `show y %ci5:-$mux[S]`

We could use a command such as `show y %ci2:+$dff[Q,D] %ci*:-$mux[S]:-$dff` in which the first `%ci` jumps over the initial d-type flip-flop and the 2nd action selects the entire input cone without going over multiplexer select inputs and flip-flop cells:

Or we could use `show y %ci*:-[CLK,S]:+$dff:+$mux` instead, following the input cone all the way but only following *`$dff`* and *`$mux`* cells, and ignoring any ports named `CLK` or `S`:

Todo

pending discussion on whether rule ordering is a bug or a feature

Similar to `%ci` exists an action `%co` to select output cones that accepts the same syntax for pattern and repetition. The `%x` action mentioned previously also accepts this advanced syntax.

These actions for traversing the circuit graph, combined with the actions for boolean operations such as intersection (`%i`) and difference (`%d`) are powerful tools for extracting the relevant portions of the circuit under investigation.

Again, see *select - modify and view the list of selected objects* for full documentation of these expressions.

Incremental selection

Sometimes a selection can most easily be described by a series of add/delete operations. As mentioned previously, the commands `select -add` and `select -del` respectively add or remove objects from the current selection instead of overwriting it.

```
select -none            # start with an empty selection
select -add reg_*       # select a bunch of objects
select -del reg_42      # but not this one
select -add state %ci   # and add more stuff
```

Within a select expression the token `%` can be used to push the previous selection on the stack.

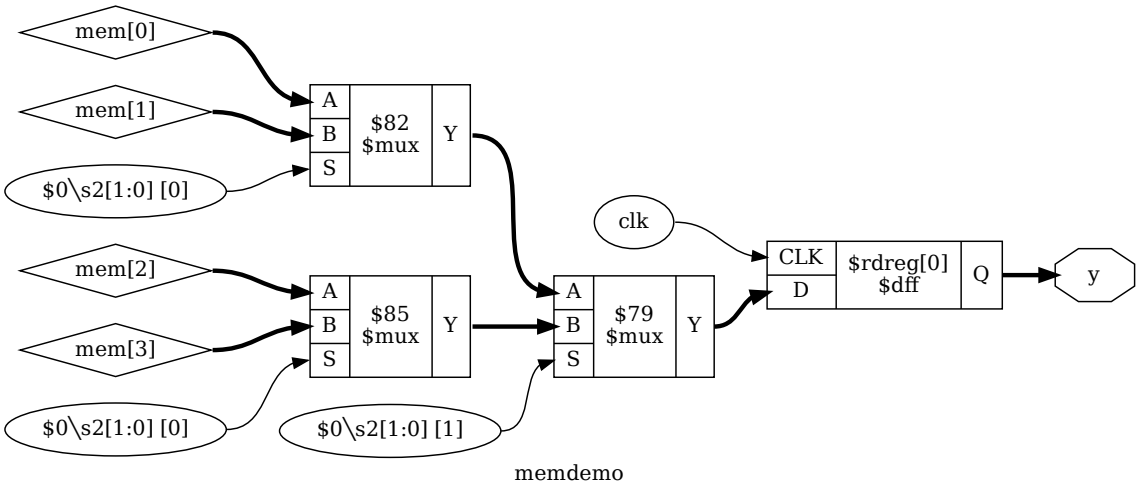

Fig. 3.21: Output of `show y %ci2:+$dff[Q,D] %ci*:-$mux[S]:-$dff`

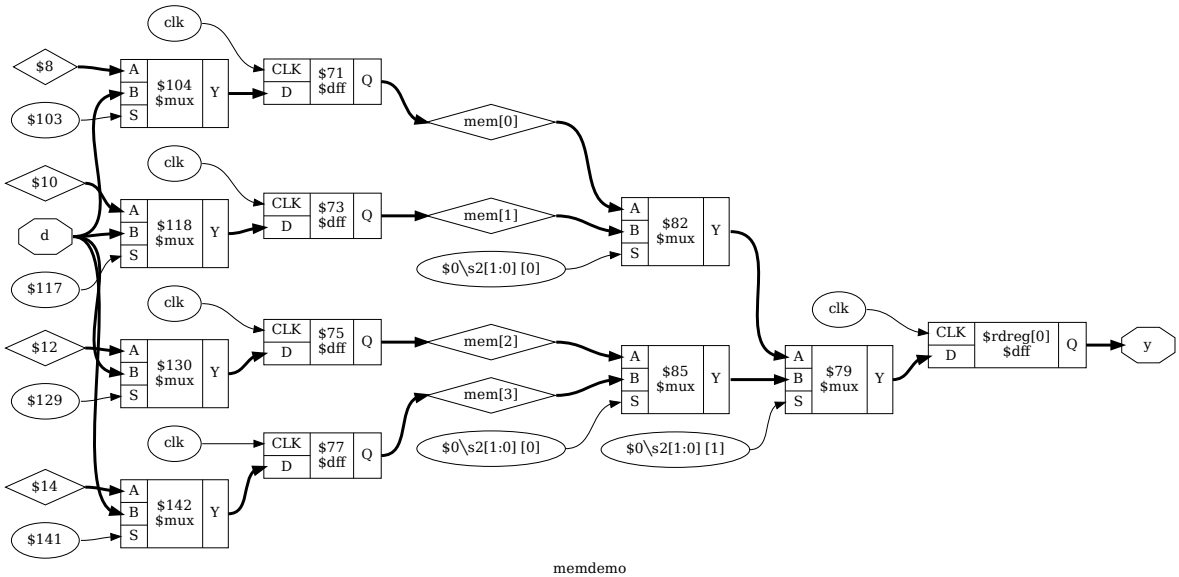

Fig. 3.22: Output of `show y %ci*:-[CLK,S]:+$dff,$mux`

```
select t:$add t:$sub    # select all $add and $sub cells
select % %ci % %d       # select only the input wires to those cells
```

Storing and recalling selections

Todo

reflow for not presentation

The current selection can be stored in memory with the command `select -set <name>`. It can later be recalled using `select @<name>`. In fact, the `@<name>` expression pushes the stored selection on the stack maintained by the *select* command. So for example `select @foo @bar %i` will select the intersection between the stored selections `foo` and `bar`.

In larger investigation efforts it is highly recommended to maintain a script that sets up relevant selections, so they can easily be recalled, for example when Yosys needs to be re-run after a design or source code change.

The *history* command can be used to list all recent interactive commands. This feature can be useful for creating such a script from the commands used in an interactive session.

Remember that select expressions can also be used directly as arguments to most commands. Some commands also accept a single select argument to some options. In those cases selection variables must be used to capture more complex selections.

Example code from docs/source/code_examples/selections:

Listing 3.46: `select.v`

```
module test(clk, s, a, y);
    input clk, s;
    input [15:0] a;
    output [15:0] y;
    reg [15:0] b, c;

    always @(posedge clk) begin
        b <= a;
        c <= b;
    end

    wire [15:0] state_a = (a ^ b) + c;
    wire [15:0] state_b = (a ^ b) - c;
    assign y = !s ? state_a : state_b;
endmodule
```

Listing 3.47: `select.ys`

```
read_verilog select.v
prep -top test

cd test
select -set cone_a state_a %ci*:-$dff
select -set cone_b state_b %ci*:-$dff
```

(continues on next page)

(continued from previous page)

```
select -set cone_ab @cone_a @cone_b %i
show -prefix select -format dot -notitle \
     -color red @cone_ab -color magenta @cone_a \
     -color blue @cone_b
```

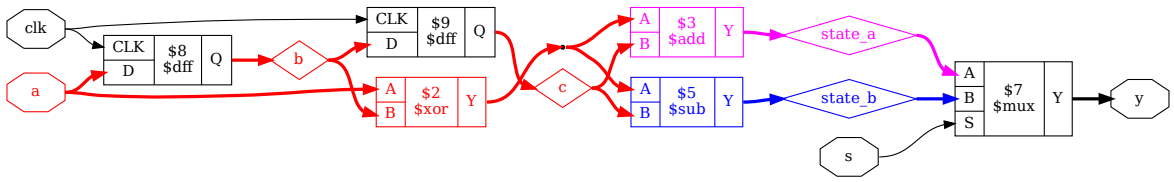

Fig. 3.23: Circuit diagram produced by Listing 3.47

3.2.3 Interactive design investigation

Todo

interactive design opening text

A look at the show command

Todo

merge into *Scripting in Yosys* show section

This section explores the *show* command and explains the symbols used in the circuit diagrams generated by it. The code used is included in the Yosys code base under `docs/source/code_examples/show`.

A simple circuit

example.v below provides the Verilog code for a simple circuit which we will use to demonstrate the usage of *show* in a simple setting.

Listing 3.48: `example.v`

```
module example(input clk, a, b, c,
               output reg [1:0] y);
    always @(posedge clk)
        if (c)
            y <= c ? a + b : 2'd0;
endmodule
```

The Yosys synthesis script we will be running is included as Listing 3.49. Note that *show* is called with the `-pause` option, that halts execution of the Yosys script until the user presses the Enter key. Using `show -pause` also allows the user to enter an interactive shell to further investigate the circuit before continuing synthesis.

Listing 3.49: `example_show.ys`

```
read_verilog example.v
show -pause # first
proc
show -pause # second
opt
show -pause # third
```

This script, when executed, will show the design after each of the three synthesis commands. We will now look at each of these diagrams and explain what is shown.

Note

The images uses in this document are generated from the `example.ys` file, rather than `example_show.ys`. `example.ys` outputs the schematics as `.dot` files rather than displaying them directly. You can view these images yourself by running `yosys example.ys` and then `xdot example_first.dot` etc.

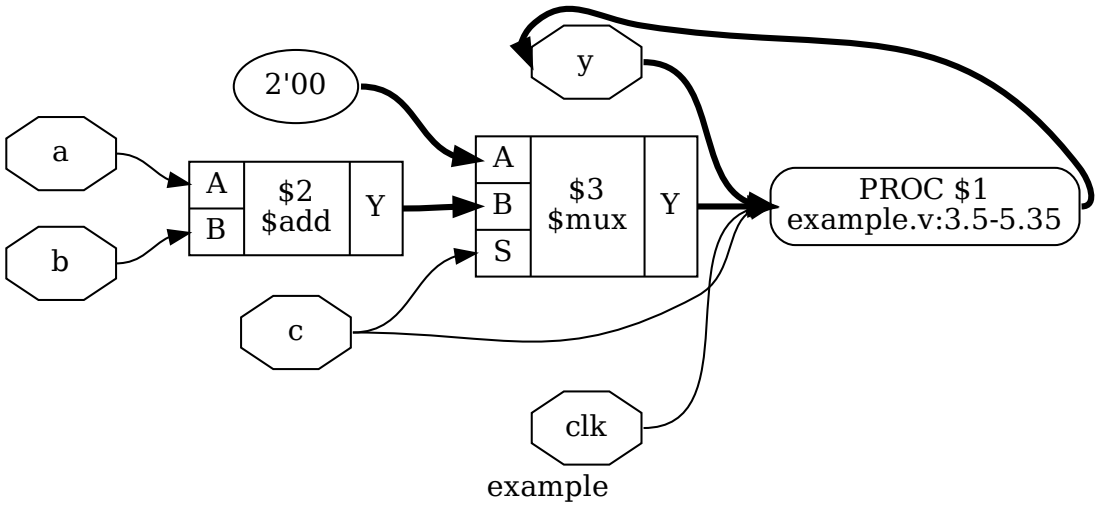

Fig. 3.24: Output of the first *show* command in Listing 3.49

The first output shows the design directly after being read by the Verilog front-end. Input and output ports are displayed as octagonal shapes. Cells are displayed as rectangles with inputs on the left and outputs on the right side. The cell labels are two lines long: The first line contains a unique identifier for the cell and the second line contains the cell type. Internal cell types are prefixed with a dollar sign. For more details on the internal cell library, see *Internal cell library*.

Constants are shown as ellipses with the constant value as label. The syntax `<bit_width>'<bits>` is used for constants that are not 32-bit wide and/or contain bits that are not 0 or 1 (i.e. `x` or `z`). Ordinary 32-bit constants are written using decimal numbers.

Single-bit signals are shown as thin arrows pointing from the driver to the load. Signals that are multiple

bits wide are shown as think arrows.

Finally *processes* are shown in boxes with round corners. Processes are Yosys' internal representation of the decision-trees and synchronization events modelled in a Verilog `always`-block. The label reads `PROC` followed by a unique identifier in the first line and contains the source code location of the original `always`-block in the second line. Note how the multiplexer from the `?:`-expression is represented as a *`$mux`* cell but the multiplexer from the `if`-statement is yet still hidden within the process.

The *`proc`* command transforms the process from the first diagram into a multiplexer and a d-type flip-flop, which brings us to the second diagram:

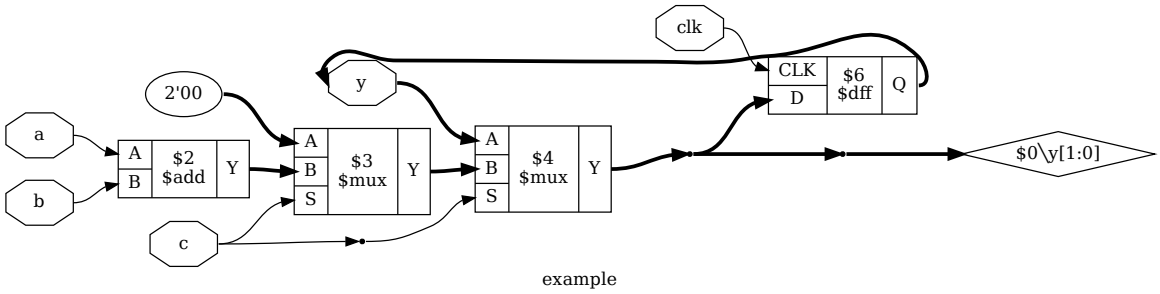

Fig. 3.25: Output of the second *`show`* command in Listing 3.49

The Rhombus shape to the right is a dangling wire. (Wire nodes are only shown if they are dangling or have "public" names, for example names assigned from the Verilog input.) Also note that the design now contains two instances of a `BUF`-node. These are artefacts left behind by the *`proc`* command. It is quite usual to see such artefacts after calling commands that perform changes in the design, as most commands only care about doing the transformation in the least complicated way, not about cleaning up after them. The next call to *`clean`* (or *`opt`*, which includes *`clean`* as one of its operations) will clean up these artefacts. This operation is so common in Yosys scripts that it can simply be abbreviated with the `;;` token, which doubles as separator for commands. Unless one wants to specifically analyze this artefacts left behind some operations, it is therefore recommended to always call *`clean`* before calling *`show`*.

In this script we directly call *`opt`* as the next step, which finally leads us to the third diagram:

Here we see that the *`opt`* command not only has removed the artifacts left behind by *`proc`*, but also determined correctly that it can remove the first *`$mux`* cell without changing the behavior of the circuit.

Break-out boxes for signal vectors

The code listing below shows a simple circuit which uses a lot of spliced signal accesses.

Listing 3.50: `splice.v`

```
module splice_demo(a, b, c, d, e, f, x, y);

input [1:0] a, b, c, d, e, f;
output [1:0] x;
assign x = {a[0], a[1]};

output [11:0] y;
assign {y[11:4], y[1:0], y[3:2]} =
```

(continues on next page)

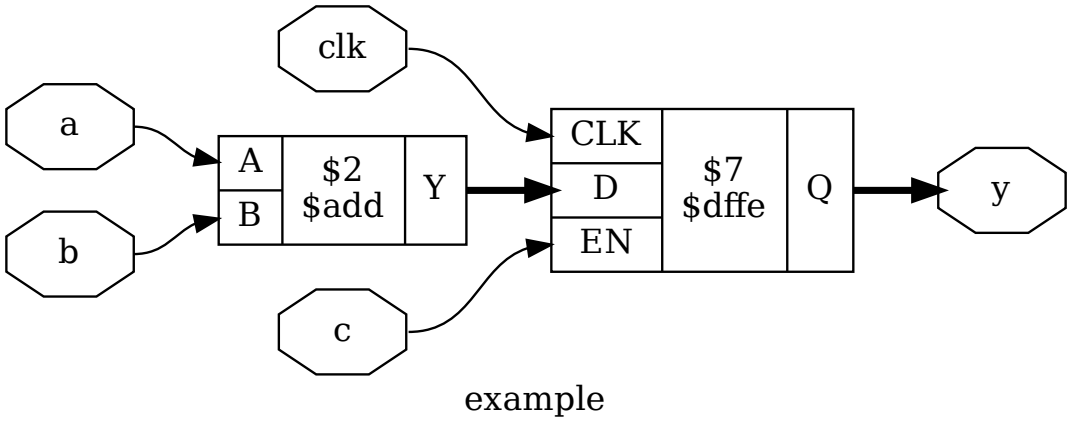

Fig. 3.26: Output of the third *show* command in *example_show.ys*

(continued from previous page)

```
                {a, b, -{c, d}, ~{e, f}};

endmodule
```

Notice how the output for this circuit from the *show* command (Fig. 3.27) appears quite complex. This is an unfortunate side effect of the way Yosys handles signal vectors (aka. multi-bit wires or buses) as native objects. While this provides great advantages when analyzing circuits that operate on wide integers, it also introduces some additional complexity when the individual bits of of a signal vector are accessed.

The key elements in understanding this circuit diagram are of course the boxes with round corners and rows labeled `<MSB_LEFT>:<LSB_LEFT> - <MSB_RIGHT>:<LSB_RIGHT>`. Each of these boxes have one signal per row on one side and a common signal for all rows on the other side. The `<MSB>:<LSB>` tuples specify which bits of the signals are broken out and connected. So the top row of the box connecting the signals `a` and `x` indicates that the bit 0 (i.e. the range 0:0) from signal `a` is connected to bit 1 (i.e. the range 1:1) of signal `x`.

Lines connecting such boxes together and lines connecting such boxes to cell ports have a slightly different look to emphasise that they are not actual signal wires but a necessity of the graphical representation. This distinction seems like a technicality, until one wants to debug a problem related to the way Yosys internally represents signal vectors, for example when writing custom Yosys commands.

Gate level netlists

Fig. 3.28 shows two common pitfalls when working with designs mapped to a cell library:

Listing 3.51: Generating Fig. 3.28

```
read_verilog cmos.v
prep -top cmos_demo
techmap
abc -liberty ../intro/mycells.lib;;
show -format dot -prefix cmos_00
```

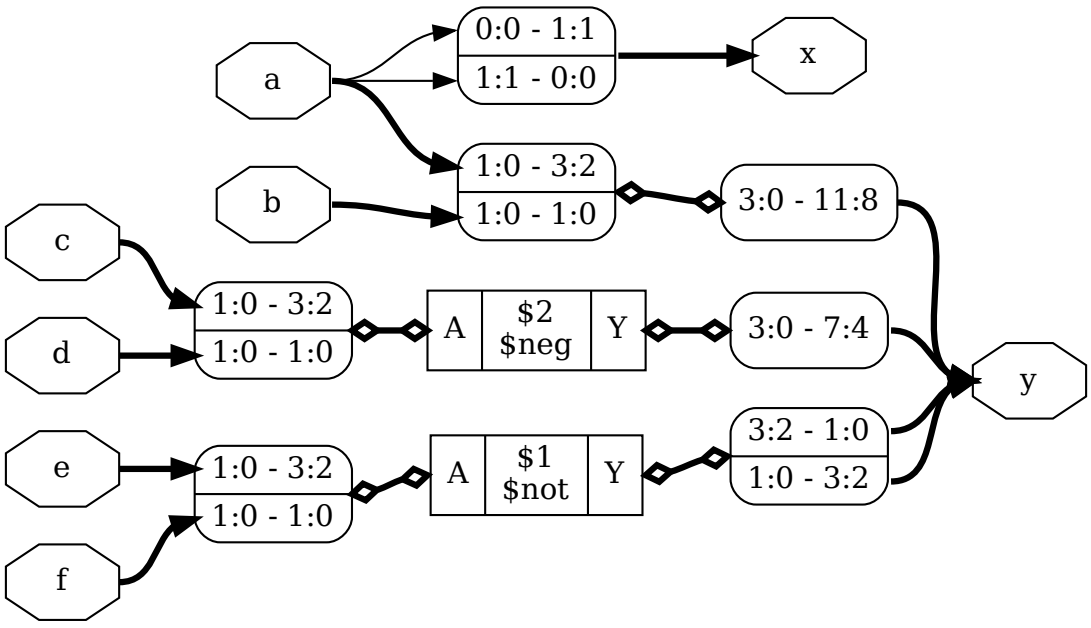

Fig. 3.27: Output of `yosys -p 'prep -top splice_demo; show' splice.v`

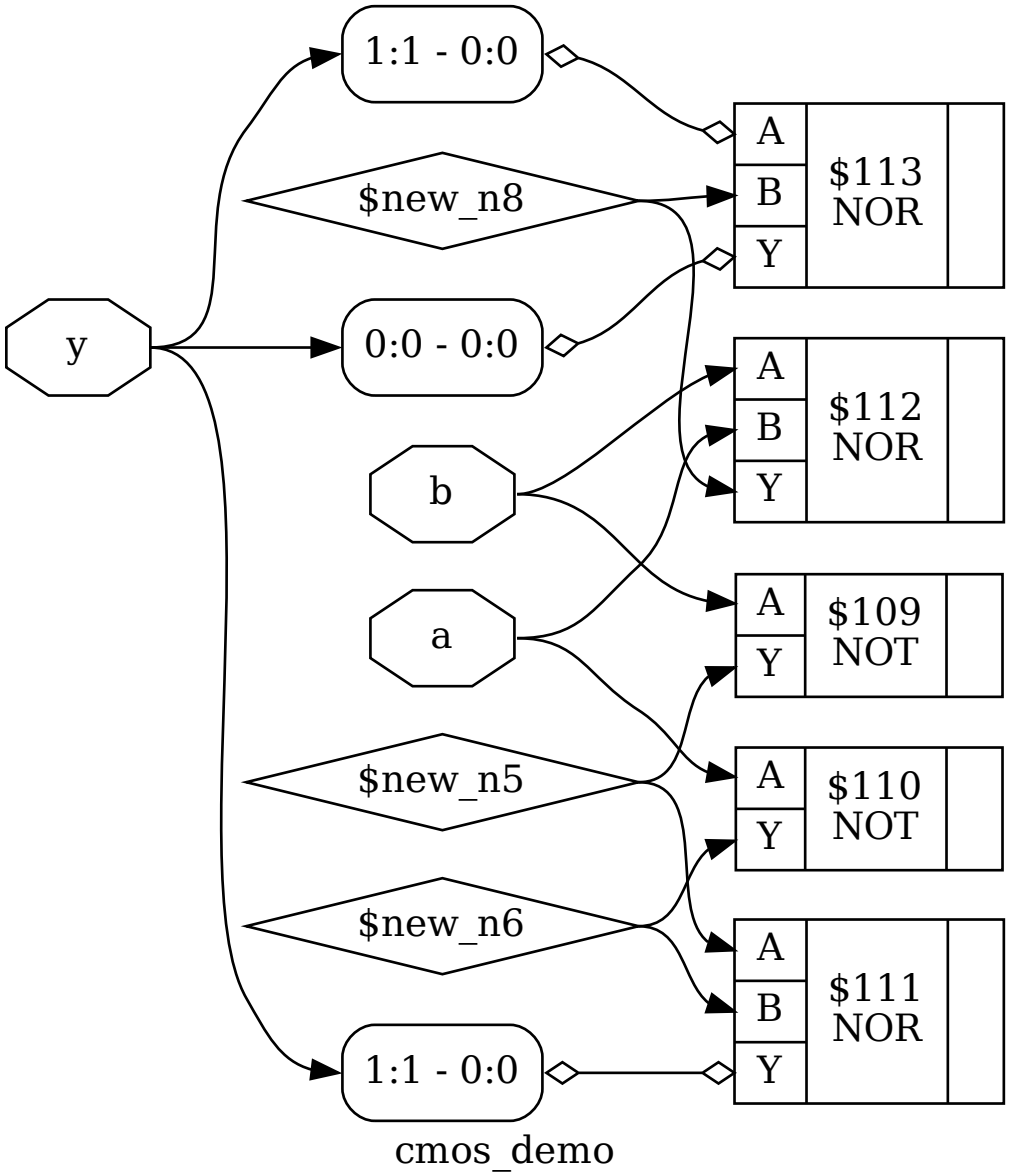

Fig. 3.28: A half-adder built from simple CMOS gates, demonstrating common pitfalls when using *show*

First, Yosys did not have access to the cell library when this diagram was generated, resulting in all cell ports defaulting to being inputs. This is why all ports are drawn on the left side the cells are awkwardly arranged in a large column. Secondly the two-bit vector `y` requires breakout-boxes for its individual bits, resulting in an unnecessary complex diagram.

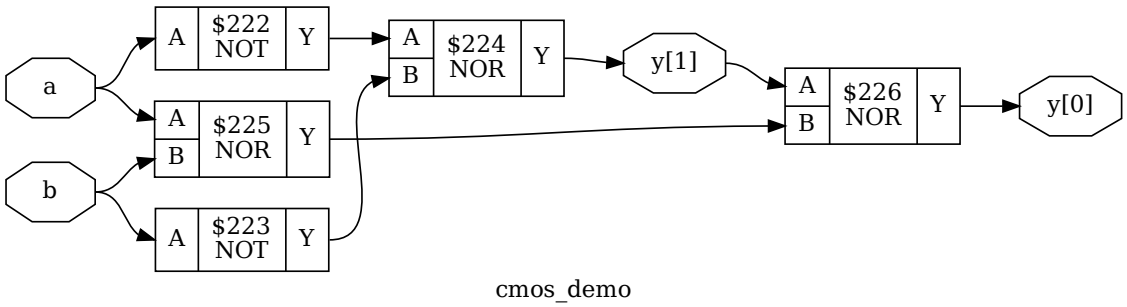

Fig. 3.29: Effects of *splitnets* command and of providing a cell library on design in Fig. 3.28

Listing 3.52: Generating Fig. 3.29

```
read_verilog cmos.v
prep -top cmos_demo
techmap
splitnets -ports
abc -liberty ../intro/mycells.lib;;
show -lib ../intro/mycells.v -format dot -prefix cmos_01
```

For Fig. 3.29, Yosys has been given a description of the cell library as Verilog file containing blackbox modules. There are two ways to load cell descriptions into Yosys: First the Verilog file for the cell library can be passed directly to the *show* command using the `-lib <filename>` option. Secondly it is possible to load cell libraries into the design with the `read_verilog -lib <filename>` command. The second method has the great advantage that the library only needs to be loaded once and can then be used in all subsequent calls to the *show* command.

In addition to that, Fig. 3.29 was generated after `splitnet -ports` was run on the design. This command splits all signal vectors into individual signal bits, which is often desirable when looking at gate-level circuits. The `-ports` option is required to also split module ports. Per default the command only operates on interior signals.

Miscellaneous notes

Per default the *show* command outputs a temporary dot file and launches `xdot` to display it. The options `-format`, `-viewer` and `-prefix` can be used to change format, viewer and filename prefix. Note that the `pdf` and `ps` format are the only formats that support plotting multiple modules in one run. The `dot` format can be used to output multiple modules, however `xdot` will raise an error when trying to read them.

In densely connected circuits it is sometimes hard to keep track of the individual signal wires. For these cases it can be useful to call *show* with the `-colors <integer>` argument, which randomly assigns colors to the nets. The integer (> 0) is used as seed value for the random color assignments. Sometimes it is necessary it try some values to find an assignment of colors that looks good.

The command `help show` prints a complete listing of all options supported by the *show* command.

Navigating the design

Plotting circuit diagrams for entire modules in the design brings us only helps in simple cases. For complex modules the generated circuit diagrams are just stupidly big and are no help at all. In such cases one first has to select the relevant portions of the circuit.

In addition to *what* to display one also needs to carefully decide *when* to display it, with respect to the synthesis flow. In general it is a good idea to troubleshoot a circuit in the earliest state in which a problem can be reproduced. So if, for example, the internal state before calling the *techmap* command already fails to verify, it is better to troubleshoot the coarse-grain version of the circuit before *techmap* than the gate-level circuit after *techmap*.

Note

It is generally recommended to verify the internal state of a design by writing it to a Verilog file using `write_verilog -noexpr` and using the simulation models from `simlib.v` and `simcells.v` from the Yosys data directory (as printed by `yosys-config --datadir`).

Interactive navigation

Once the right state within the synthesis flow for debugging the circuit has been identified, it is recommended to simply add the *shell* command to the matching place in the synthesis script. This command will stop the synthesis at the specified moment and go to shell mode, where the user can interactively enter commands.

For most cases, the shell will start with the whole design selected (i.e. when the synthesis script does not already narrow the selection). The command *ls* can now be used to create a list of all modules. The command *cd* can be used to switch to one of the modules (type `cd ..` to switch back). Now the *ls* command lists the objects within that module. This is demonstrated below using `example.v` from *A simple circuit*:

Listing 3.53: Output of *ls* and *cd* after running `yosys example.v`

```
yosys> ls

1 modules:
  example

yosys> cd example

yosys [example]> ls

8 wires:
  $0\y[1:0]
  $add$example.v:5$2_Y
  $ternary$example.v:5$3_Y
  a
  b
  c
  clk
  y

2 cells:
  $add$example.v:5$2
  $ternary$example.v:5$3
```

(continues on next page)

(continued from previous page)

```
1 processes:
  $proc$example.v:3$1
```

When a module is selected using the *cd* command, all commands (with a few exceptions, such as the `read_` and `write_` commands) operate only on the selected module. This can also be useful for synthesis scripts where different synthesis strategies should be applied to different modules in the design.

We can see that the cell names from Fig. 3.26 are just abbreviations of the actual cell names, namely the part after the last dollar-sign. Most auto-generated names (the ones starting with a dollar sign) are rather long and contains some additional information on the origin of the named object. But in most cases those names can simply be abbreviated using the last part.

Usually all interactive work is done with one module selected using the *cd* command. But it is also possible to work from the design-context (`cd ..`). In this case all object names must be prefixed with `<module_name>/`. For example `a*/b*` would refer to all objects whose names start with `b` from all modules whose names start with `a`.

The *dump* command can be used to print all information about an object. For example, calling `dump $2` after the `cd example` above:

Listing 3.54: Output of `dump $2` after Listing 3.53

```
attribute \src "example.v:5.22-5.27"
cell $add $add$example.v:5$2
  parameter \Y_WIDTH 2
  parameter \B_WIDTH 1
  parameter \A_WIDTH 1
  parameter \B_SIGNED 0
  parameter \A_SIGNED 0
  connect \Y $add$example.v:5$2_Y
  connect \B \b
  connect \A \a
end
```

This can for example be useful to determine the names of nets connected to cells, as the net-names are usually suppressed in the circuit diagram if they are auto-generated. Note that the output is in the RTLIL representation, described in *The RTL Intermediate Language (RTLIL)*.

Interactive Design Investigation

Yosys can also be used to investigate designs (or netlists created from other tools).

- The selection mechanism, especially patterns such as `%ci` and `%co`, can be used to figure out how parts of the design are connected.
- Commands such as *submod*, *expose*, and *splice* can be used to transform the design into an equivalent design that is easier to analyse.
- Commands such as *eval* and *sat* can be used to investigate the behavior of the circuit.
- *show - generate schematics using graphviz*.
- *dump - print parts of the design in RTLIL format*.
- *add - add objects to the design* and *delete - delete objects in the design* can be used to modify and reorganize a design dynamically.

The code used is included in the Yosys code base under `docs/source/code_examples/scrambler`.

Changing design hierarchy

Commands such as *flatten* and *submod* can be used to change the design hierarchy, i.e. flatten the hierarchy or moving parts of a module to a submodule. This has applications in synthesis scripts as well as in reverse engineering and analysis. An example using *submod* is shown below for reorganizing a module in Yosys and checking the resulting circuit.

Listing 3.55: `scrambler.v`

```
module scrambler(
        input clk, rst, in_bit,
        output reg out_bit
);
    reg [31:0] xs;
    always @(posedge clk) begin
            if (rst)
            xs = 1;
        xs = xs ^ (xs << 13);
        xs = xs ^ (xs >> 17);
        xs = xs ^ (xs << 5);
        out_bit <= in_bit ^ xs[0];
    end
endmodule
```

Listing 3.56: `scrambler.ys`

```
read_verilog scrambler.v

hierarchy; proc;;

cd scrambler
submod -name xorshift32 xs %c %ci %D %c %ci:+[D] %D %ci*:-$dff xs %co %ci %d
```

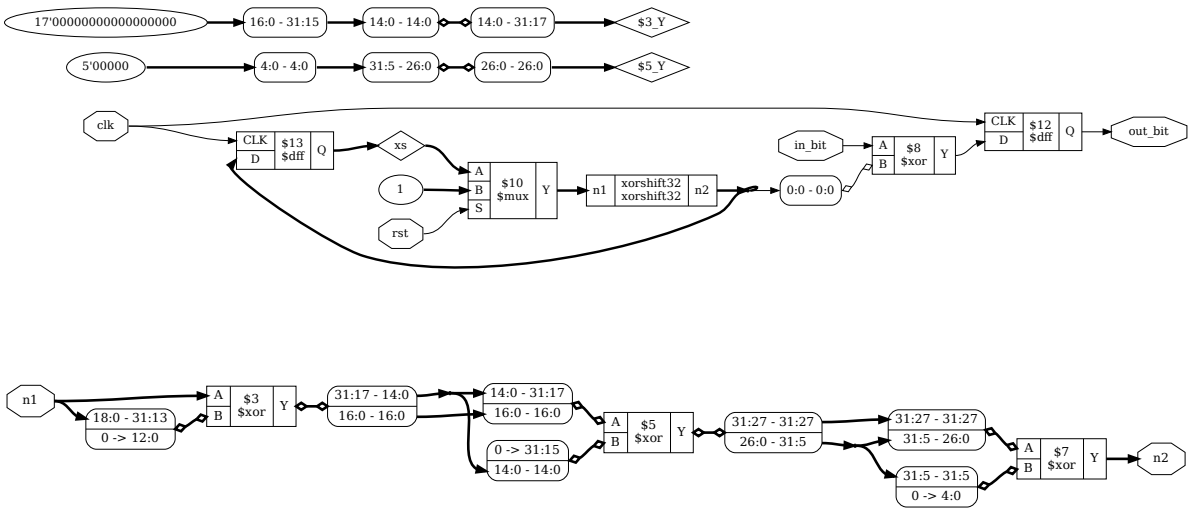

Analyzing the resulting circuit with *eval - evaluate the circuit given an input*:

Todo

replace inline code

```
> cd xorshift32
> rename n2 in
> rename n1 out

> eval -set in 1 -show out
Eval result: \out = 270369.

> eval -set in 270369 -show out
Eval result: \out = 67634689.

> sat -set out 632435482
Signal Name                 Dec        Hex                                  Bin
-------------------- ---------- ---------- ------------------------------------
\in                   745495504   2c6f5bd0      00101100011011110101101111010000
\out                  632435482   25b2331a      00100101101100100011001100011010
```

Behavioral changes

Commands such as *techmap* can be used to make behavioral changes to the design, for example changing asynchronous resets to synchronous resets. This has applications in design space exploration (evaluation of various architectures for one circuit).

The following techmap map file replaces all positive-edge async reset flip-flops with positive-edge sync reset flip-flops. The code is taken from the example Yosys script for ASIC synthesis of the Amber ARMv2 CPU.

Todo

replace inline code

```
(* techmap_celltype = "$adff" *)
module adff2dff (CLK, ARST, D, Q);

    parameter WIDTH = 1;
    parameter CLK_POLARITY = 1;
    parameter ARST_POLARITY = 1;
    parameter ARST_VALUE = 0;

    input CLK, ARST;
    input [WIDTH-1:0] D;
    output reg [WIDTH-1:0] Q;

    wire [1023:0] _TECHMAP_DO_ = "proc";

    wire _TECHMAP_FAIL_ = !CLK_POLARITY || !ARST_POLARITY;

    always @(posedge CLK)
        if (ARST)
```

(continues on next page)

(continued from previous page)

```
            Q <= ARST_VALUE;
        else
            Q <= D;

endmodule
```

For more on the *techmap* command, see the page on *Techmap by example*.

Advanced investigation techniques

When working with very large modules, it is often not enough to just select the interesting part of the module. Instead it can be useful to extract the interesting part of the circuit into a separate module. This can for example be useful if one wants to run a series of synthesis commands on the critical part of the module and wants to carefully read all the debug output created by the commands in order to spot a problem. This kind of troubleshooting is much easier if the circuit under investigation is encapsulated in a separate module.

Recall the `memdemo` design from *Advanced logic cone selection*:

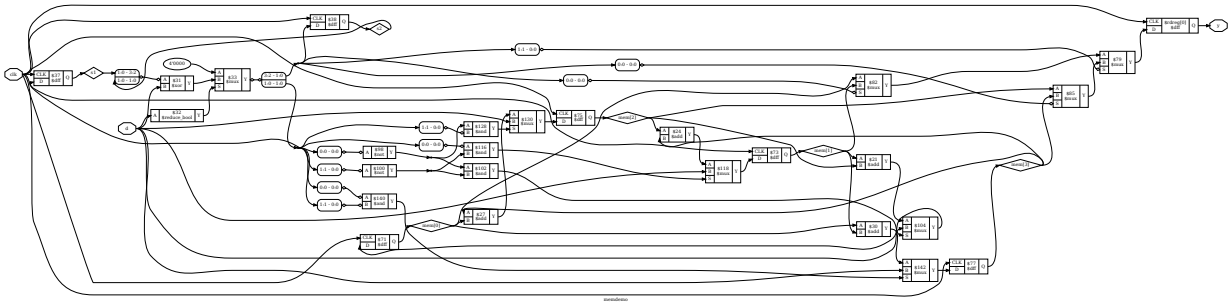

Fig. 3.30: `memdemo`

Because this produces a rather large circuit, it can be useful to split it into smaller parts for viewing and working with. Listing 3.57 does exactly that, utilising the *submod* command to split the circuit into three sections: `outstage`, `selstage`, and `scramble`.

Listing 3.57: Using *submod* to break up the circuit from `memdemo.v`

```
select -set outstage y %ci2:+$dff[Q,D] %ci*:-$mux[S]:-$dff
select -set selstage y %ci2:+$dff[Q,D] %ci*:-$dff @outstage %d
select -set scramble mem* %ci2 %ci*:-$dff mem* %d @selstage %d
submod -name scramble @scramble
submod -name outstage @outstage
submod -name selstage @selstage
```

The `-name` option is used to specify the name of the new module and also the name of the new cell in the current module. The resulting circuits are shown below.

Evaluation of combinatorial circuits

The *eval* command can be used to evaluate combinatorial circuits. As an example, we will use the `selstage` subnet of `memdemo` which we found above and is shown in Fig. 3.32.

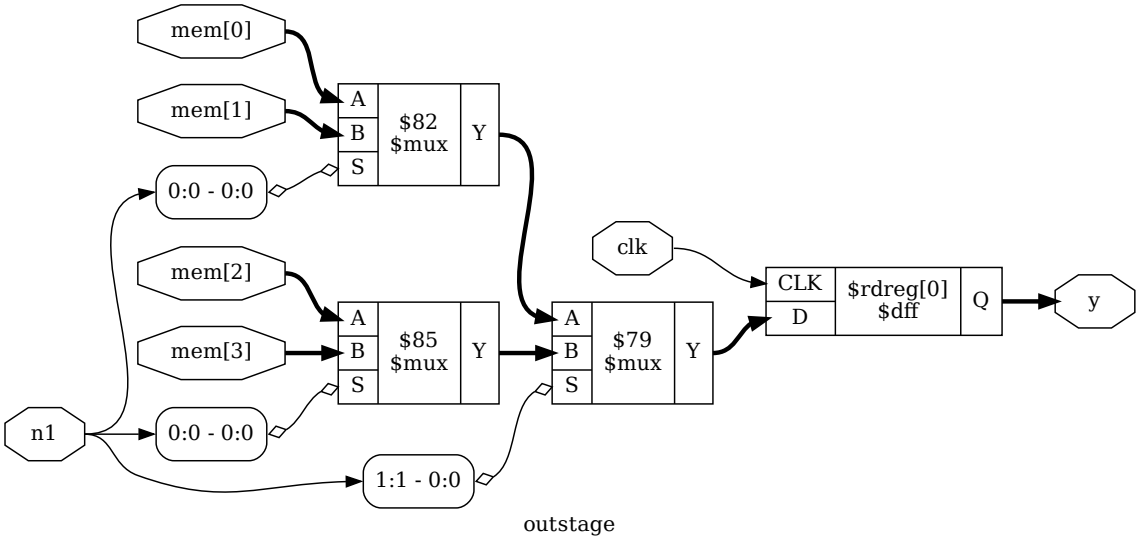

Fig. 3.31: `outstage`

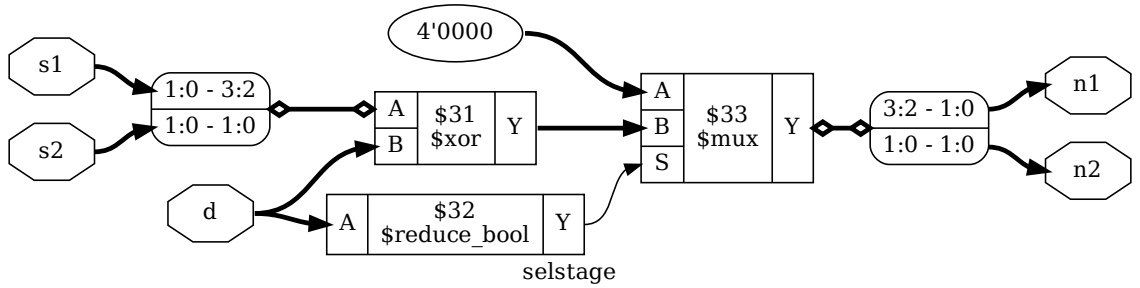

Fig. 3.32: `selstage`

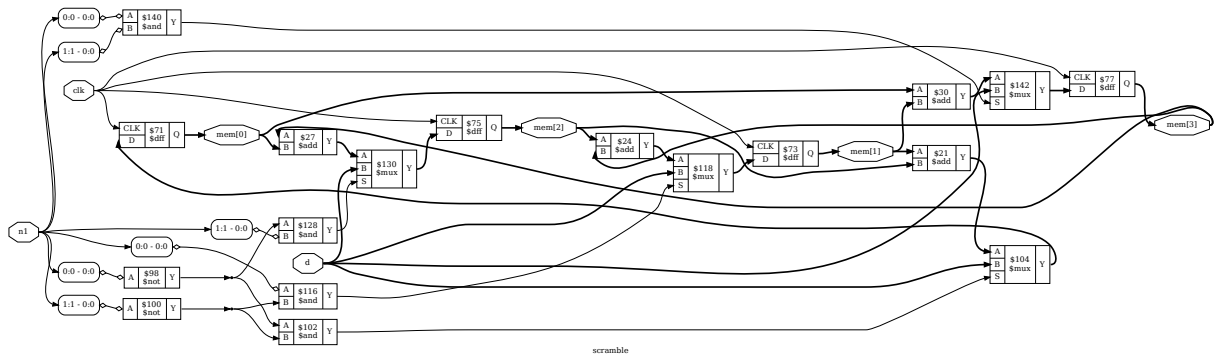

Fig. 3.33: `scramble`

Todo

replace inline code

```
yosys [selstage]> eval -set s2,s1 4'b1001 -set d 4'hc -show n2 -show n1

1. Executing EVAL pass (evaluate the circuit given an input).
Full command line: eval -set s2,s1 4'b1001 -set d 4'hc -show n2 -show n1
Eval result: \n2 = 2'10.
Eval result: \n1 = 2'10.
```

So the `-set` option is used to set input values and the `-show` option is used to specify the nets to evaluate. If no `-show` option is specified, all selected output ports are used per default.

If a necessary input value is not given, an error is produced. The option `-set-undef` can be used to instead set all unspecified input nets to undef (`x`).

The `-table` option can be used to create a truth table. For example:

```
yosys [selstage]> eval -set-undef -set d[3:1] 0 -table s1,d[0]

10. Executing EVAL pass (evaluate the circuit given an input).
Full command line: eval -set-undef -set d[3:1] 0 -table s1,d[0]

  \s1 \d [0] |  \n1  \n2
 ---- ------ | ---- ----
 2'00    1'0 | 2'00 2'00
 2'00    1'1 | 2'xx 2'00
 2'01    1'0 | 2'00 2'00
 2'01    1'1 | 2'xx 2'01
 2'10    1'0 | 2'00 2'00
 2'10    1'1 | 2'xx 2'10
 2'11    1'0 | 2'00 2'00
 2'11    1'1 | 2'xx 2'11

Assumed undef (x) value for the following signals: \s2
```

Note that the *eval* command (as well as the *sat* command discussed in the next sections) does only operate on flattened modules. It can not analyze signals that are passed through design hierarchy levels. So the *flatten* command must be used on modules that instantiate other modules before these commands can be applied.

Solving combinatorial SAT problems

Often the opposite of the *eval* command is needed, i.e. the circuits output is given and we want to find the matching input signals. For small circuits with only a few input bits this can be accomplished by trying all possible input combinations, as it is done by the `eval -table` command. For larger circuits however, Yosys provides the *sat* command that uses a SAT solver, MiniSAT, to solve this kind of problems.

Note

While it is possible to perform model checking directly in Yosys, it is highly recommended to use SBY or EQY for formal hardware verification.

The *sat* command works very similar to the *eval* command. The main difference is that it is now also possible to set output values and find the corresponding input values. For Example:

Todo

replace inline code

```
yosys [selstage]> sat -show s1,s2,d -set s1 s2 -set n2,n1 4'b1001

11. Executing SAT pass (solving SAT problems in the circuit).
Full command line: sat -show s1,s2,d -set s1 s2 -set n2,n1 4'b1001

Setting up SAT problem:
Import set-constraint: \s1 = \s2
Import set-constraint: { \n2 \n1 } = 4'1001
Final constraint equation: { \n2 \n1 \s1 } = { 4'1001 \s2 }
Imported 3 cells to SAT database.
Import show expression: { \s1 \s2 \d }

Solving problem with 81 variables and 207 clauses..
SAT solving finished - model found:

  Signal Name                 Dec        Hex             Bin
  -------------------- ---------- ---------- ---------------
  \d                            9          9            1001
  \s1                           0          0              00
  \s2                           0          0              00
```

Note that the *sat* command supports signal names in both arguments to the `-set` option. In the above example we used `-set s1 s2` to constraint `s1` and `s2` to be equal. When more complex constraints are needed, a wrapper circuit must be constructed that checks the constraints and signals if the constraint was met using an extra output port, which then can be forced to a value using the `-set` option. (Such a circuit that contains the circuit under test plus additional constraint checking circuitry is called a `miter` circuit.)

Listing 3.58: `primetest.v`, a simple miter circuit for testing if a number is prime. But it has a problem.

```
module primetest(p, a, b, ok);
input [15:0] p, a, b;
output ok = p != a*b || a == 1 || b == 1;
endmodule
```

Listing 3.58 shows a miter circuit that is supposed to be used as a prime number test. If `ok` is 1 for all input values `a` and `b` for a given `p`, then `p` is prime, or at least that is the idea.

Todo

replace inline code

Listing 3.59: Experiments with the miter circuit from `primetest.v`.

```
yosys [primetest]> sat -prove ok 1 -set p 31

1. Executing SAT pass (solving SAT problems in the circuit).
Full command line: sat -prove ok 1 -set p 31

Setting up SAT problem:
Import set-constraint: \p = 16'0000000000011111
Final constraint equation: \p = 16'0000000000011111
Imported 6 cells to SAT database.
Import proof-constraint: \ok = 1'1
Final proof equation: \ok = 1'1

Solving problem with 2790 variables and 8241 clauses..
SAT proof finished - model found: FAIL!

  ______                    ___       ___       _ _             _ _
 (_____ \                  / __)     / __)     (_) |           | | |
  _____) )___ ___   ___ _| |__    _| |__ _____ _| | _____  __| | |
 |  ____/ ___) _ \ / _ (_   __)  (_   __|____ | | || ___ |/ _  |_|
 | |   | |  | |_| | |_| || |       | |  / ___ | | || ____( (_| |_
 |_|   |_|   \___/ \___/ |_|       |_|  \_____|_|\_)_____)\____|_|


  Signal Name                 Dec        Hex                   Bin
  -------------------- ---------- ---------- --------------------
  \a                       15029       3ab5      0011101010110101
  \b                        4099       1003      0001000000000011
  \ok                          0          0                     0
  \p                          31         1f      0000000000011111
```

The Yosys shell session shown in Listing 3.59 demonstrates that SAT solvers can even find the unexpected solutions to a problem: Using integer overflow there actually is a way of "factorizing" 31. The clean solution would of course be to perform the test in 32 bits, for example by replacing `p != a*b` in the miter with `p != {16'd0,a}b`, or by using a temporary variable for the 32 bit product `a*b`. But as 31 fits well into 8 bits (and as the purpose of this document is to show off Yosys features) we can also simply force the upper 8 bits of `a` and `b` to zero for the *sat* call, as is done below.

Todo

replace inline code

Listing 3.60: Miter circuit from `primetest.v`, with the upper 8 bits of `a` and `b` constrained to prevent overflow.

```
yosys [primetest]> sat -prove ok 1 -set p 31 -set a[15:8],b[15:8] 0

1. Executing SAT pass (solving SAT problems in the circuit).
Full command line: sat -prove ok 1 -set p 31 -set a[15:8],b[15:8] 0
```

(continues on next page)

(continued from previous page)

```
Setting up SAT problem:
Import set-constraint: \p = 16'0000000000011111
Import set-constraint: { \a [15:8] \b [15:8] } = 16'0000000000000000
Final constraint equation: { \a [15:8] \b [15:8] \p } = { 16'0000000000000000 16
↪'0000000000011111 }
Imported 6 cells to SAT database.
Import proof-constraint: \ok = 1'1
Final proof equation: \ok = 1'1

Solving problem with 2790 variables and 8257 clauses..
SAT proof finished - no model found: SUCCESS!

                  /$$$$$$      /$$$$$$$$     /$$$$$$$
                 /$$__  $$    | $$_____/    | $$__  $$
                | $$  \ $$    | $$          | $$  \ $$
                | $$  | $$    | $$$$$       | $$  | $$
                | $$  | $$    | $$__/       | $$  | $$
                | $$/$$ $$    | $$          | $$  | $$
                |  $$$$$$/ /$$| $$$$$$$$ /$$| $$$$$$$//$$
                 \____ $$$|__/|________/|__/|_______/|__/
                      \__/
```

The `-prove` option used in Listing 3.60 works similar to `-set`, but tries to find a case in which the two arguments are not equal. If such a case is not found, the property is proven to hold for all inputs that satisfy the other constraints.

It might be worth noting, that SAT solvers are not particularly efficient at factorizing large numbers. But if a small factorization problem occurs as part of a larger circuit problem, the Yosys SAT solver is perfectly capable of solving it.

Solving sequential SAT problems

The SAT solver functionality in Yosys can not only be used to solve combinatorial problems, but can also solve sequential problems. Let's consider the `memdemo` design from *Advanced logic cone selection* again, and suppose we want to know which sequence of input values for `d` will cause the output y to produce the sequence 1, 2, 3 from any initial state. Let's use the following command:

Todo

replace inline code?

```
sat -seq 6 -show y -show d -set-init-undef \
  -max_undef -set-at 4 y 1 -set-at 5 y 2 -set-at 6 y 3
```

The `-seq 6` option instructs the *sat* command to solve a sequential problem in 6 time steps. (Experiments with lower number of steps have show that at least 3 cycles are necessary to bring the circuit in a state from which the sequence 1, 2, 3 can be produced.)

The `-set-init-undef` option tells the *sat* command to initialize all registers to the undef (`x`) state. The way the `x` state is treated in Verilog will ensure that the solution will work for any initial state.

The `-max_undef` option instructs the *sat* command to find a solution with a maximum number of undefs. This way we can see clearly which inputs bits are relevant to the solution.

Finally the three `-set-at` options add constraints for the `y` signal to play the 1, 2, 3 sequence, starting with time step 4.

This produces the following output:

Todo

replace inline code

Listing 3.61: Solving a sequential SAT problem in the `memdemo` module.

```
yosys [memdemo]> sat -seq 6 -show y -show d -set-init-undef \
    -max_undef -set-at 4 y 1 -set-at 5 y 2 -set-at 6 y 3

1. Executing SAT pass (solving SAT problems in the circuit).
Full command line: sat -seq 6 -show y -show d -set-init-undef
    -max_undef -set-at 4 y 1 -set-at 5 y 2 -set-at 6 y 3

Setting up time step 1:
Final constraint equation: { } = { }
Imported 29 cells to SAT database.

Setting up time step 2:
Final constraint equation: { } = { }
Imported 29 cells to SAT database.

Setting up time step 3:
Final constraint equation: { } = { }
Imported 29 cells to SAT database.

Setting up time step 4:
Import set-constraint for timestep: \y = 4'0001
Final constraint equation: \y = 4'0001
Imported 29 cells to SAT database.

Setting up time step 5:
Import set-constraint for timestep: \y = 4'0010
Final constraint equation: \y = 4'0010
Imported 29 cells to SAT database.

Setting up time step 6:
Import set-constraint for timestep: \y = 4'0011
Final constraint equation: \y = 4'0011
Imported 29 cells to SAT database.

Setting up initial state:
Final constraint equation: { \y \s2 \s1 \mem[3] \mem[2] \mem[1]
            \mem[0] } = 24'xxxxxxxxxxxxxxxxxxxxxxxx
```

(continues on next page)

(continued from previous page)

```
Import show expression: \y
Import show expression: \d

Solving problem with 10322 variables and 27881 clauses..
SAT model found. maximizing number of undefs.
SAT solving finished - model found:

  Time Signal Name                 Dec        Hex              Bin
  ---- -------------------- ---------- ---------- ---------------
  init \mem[0]                      --         --            xxxx
  init \mem[1]                      --         --            xxxx
  init \mem[2]                      --         --            xxxx
  init \mem[3]                      --         --            xxxx
  init \s1                          --         --              xx
  init \s2                          --         --              xx
  init \y                           --         --            xxxx
  ---- -------------------- ---------- ---------- ---------------
     1 \d                            0          0            0000
     1 \y                           --         --            xxxx
  ---- -------------------- ---------- ---------- ---------------
     2 \d                            1          1            0001
     2 \y                           --         --            xxxx
  ---- -------------------- ---------- ---------- ---------------
     3 \d                            2          2            0010
     3 \y                            0          0            0000
  ---- -------------------- ---------- ---------- ---------------
     4 \d                            3          3            0011
     4 \y                            1          1            0001
  ---- -------------------- ---------- ---------- ---------------
     5 \d                           --         --            001x
     5 \y                            2          2            0010
  ---- -------------------- ---------- ---------- ---------------
     6 \d                           --         --            xxxx
     6 \y                            3          3            0011
```

It is not surprising that the solution sets `d = 0` in the first step, as this is the only way of setting the `s1` and `s2` registers to a known value. The input values for the other steps are a bit harder to work out manually, but the SAT solver finds the correct solution in an instant.

There is much more to write about the *`sat`* command. For example, there is a set of options that can be used to performs sequential proofs using temporal induction [EenSorensson03]. The command `help sat` can be used to print a list of all options with short descriptions of their functions.

3.2.4 Symbolic model checking

Todo

check text context

Note

While it is possible to perform model checking directly in Yosys, it is highly recommended to use SBY or EQY for formal hardware verification.

Symbolic Model Checking (SMC) is used to formally prove that a circuit has (or has not) a given property.

One application is Formal Equivalence Checking: Proving that two circuits are identical. For example this is a very useful feature when debugging custom passes in Yosys.

Other applications include checking if a module conforms to interface standards.

The *sat* command in Yosys can be used to perform Symbolic Model Checking.

Checking techmap

Todo

add/expand supporting text

Let's take a look at an example included in the Yosys code base under docs/source/code_examples/synth_flow:

Listing 3.62: techmap_01_map.v

```
module \$add (A, B, Y);

parameter A_SIGNED = 0;
parameter B_SIGNED = 0;
parameter A_WIDTH = 1;
parameter B_WIDTH = 1;
parameter Y_WIDTH = 1;

input [A_WIDTH-1:0] A;
input [B_WIDTH-1:0] B;
output [Y_WIDTH-1:0] Y;

generate
  if ((A_WIDTH == 32) && (B_WIDTH == 32))
    begin
      wire [16:0] S1 = A[15:0] + B[15:0];
      wire [15:0] S2 = A[31:16] + B[31:16] + S1[16];
      assign Y = {S2[15:0], S1[15:0]};
    end
  else
    wire _TECHMAP_FAIL_ = 1;
endgenerate

endmodule
```

Listing 3.63: techmap_01.v

```
module test(input [31:0]  a, b,
            output [31:0] y);
assign y = a + b;
endmodule
```

Listing 3.64: techmap_01.ys

```
read_verilog techmap_01.v
hierarchy -check -top test
techmap -map techmap_01_map.v;;
```

To see if it is correct we can use the following code:

Todo

replace inline code

```
# read test design
read_verilog techmap_01.v
hierarchy -top test

# create two version of the design: test_orig and test_mapped
copy test test_orig
rename test test_mapped

# apply the techmap only to test_mapped
techmap -map techmap_01_map.v test_mapped

# create a miter circuit to test equivalence
miter -equiv -make_assert -make_outputs test_orig test_mapped miter
flatten miter

# run equivalence check
sat -verify -prove-asserts -show-inputs -show-outputs miter
```

Result:

```
Solving problem with 945 variables and 2505 clauses..
SAT proof finished - no model found: SUCCESS!
```

AXI4 Stream Master

The code used in this section is included in the Yosys code base under `docs/source/code_examples/axis`.

The following AXI4 Stream Master has a bug. But the bug is not exposed if the slave keeps `tready` asserted all the time. (Something a test bench might do.)

Symbolic Model Checking can be used to expose the bug and find a sequence of values for `tready` that yield the incorrect behavior.

Todo

add/expand supporting text

Listing 3.65: `axis_master.v`

```
module axis_master(aclk, aresetn, tvalid, tready, tdata);
    input aclk, aresetn, tready;
    output reg tvalid;
    output reg [7:0] tdata;

    reg [31:0] state;
    always @(posedge aclk) begin
        if (!aresetn) begin
            state <= 314159265;
            tvalid <= 0;
            tdata <= 'bx;
        end else begin
            if (tvalid && tready)
                    tvalid <= 0;
            if (!tvalid || !tready) begin
            //              ^- should not be inverted!
                state = state ^ state << 13;
                state = state ^ state >> 7;
                state = state ^ state << 17;
                if (state[9:8] == 0) begin
                    tvalid <= 1;
                    tdata <= state;
                end
            end
        end
    end
endmodule
```

Listing 3.66: `axis_test.v`

```
module axis_test(aclk, tready);
    input aclk, tready;
    wire aresetn, tvalid;
    wire [7:0] tdata;

    integer counter = 0;
    reg aresetn = 0;

    axis_master uut (aclk, aresetn, tvalid, tready, tdata);

    always @(posedge aclk) begin
            if (aresetn && tready && tvalid) begin
            if (counter == 0) assert(tdata ==  19);
            if (counter == 1) assert(tdata ==  99);
            if (counter == 2) assert(tdata ==   1);
            if (counter == 3) assert(tdata == 244);
```

(continues on next page)

(continued from previous page)

```
            if (counter == 4) assert(tdata == 133);
            if (counter == 5) assert(tdata == 209);
            if (counter == 6) assert(tdata == 241);
            if (counter == 7) assert(tdata == 137);
            if (counter == 8) assert(tdata == 176);
            if (counter == 9) assert(tdata ==   6);
            counter <= counter + 1;
        end
        aresetn <= 1;
    end
endmodule
```

Listing 3.67: `test.ys`

```
read_verilog -sv axis_master.v axis_test.v
hierarchy -top axis_test

proc; flatten;;
sat -seq 50 -prove-asserts
```

Result with unmodified `axis_master.v`:

Todo

replace inline code

```
Solving problem with 159344 variables and 442126 clauses..
SAT proof finished - model found: FAIL!
```

Result with fixed `axis_master.v`:

```
Solving problem with 159144 variables and 441626 clauses..
SAT proof finished - no model found: SUCCESS!
```

CHAPTER

FOUR

YOSYS INTERNALS

Todo

less academic

Yosys is an extensible open source hardware synthesis tool. It is aimed at designers who are looking for an easily accessible, universal, and vendor-independent synthesis tool, as well as scientists who do research in electronic design automation (EDA) and are looking for an open synthesis framework that can be used to test algorithms on complex real-world designs.

Yosys can synthesize a large subset of Verilog 2005 and has been tested with a wide range of real-world designs, including the OpenRISC 1200 CPU, the openMSP430 CPU, the OpenCores I2C master, and the k68 CPU.

Todo

add RISC-V core example

Yosys is written in C++, targeting C++17 at minimum. This chapter describes some of the fundamental Yosys data structures. For the sake of simplicity the C++ type names used in the Yosys implementation are used in this chapter, even though the chapter only explains the conceptual idea behind it and can be used as reference to implement a similar system in any language.

4.1 Internal flow

A (usually short) synthesis script controls Yosys.

These scripts contain three types of commands:

- **Frontends**, that read input files (usually Verilog);
- **Passes**, that perform transformations on the design in memory;
- **Backends**, that write the design in memory to a file (various formats are available: Verilog, BLIF, EDIF, SPICE, BTOR, ...).

4.1.1 Flow overview

Todo

less academic

Figure 4.1 shows the simplified data flow within Yosys. Rectangles in the figure represent program modules and ellipses internal data structures that are used to exchange design data between the program modules.

Design data is read in using one of the frontend modules. The high-level HDL frontends for Verilog and VHDL code generate an abstract syntax tree (AST) that is then passed to the AST frontend. Note that both HDL frontends use the same AST representation that is powerful enough to cover the Verilog HDL and VHDL language.

The AST Frontend then compiles the AST to Yosys's main internal data format, the RTL Intermediate Language (RTLIL). A more detailed description of this format is given in *The RTL Intermediate Language (RTLIL)*.

There is also a text representation of the RTLIL data structure that can be parsed using the RTLIL Frontend which is described in *RTLIL text representation*.

The design data may then be transformed using a series of passes that all operate on the RTLIL representation of the design.

Finally the design in RTLIL representation is converted back to text by one of the backends, namely the Verilog Backend for generating Verilog netlists and the RTLIL Backend for writing the RTLIL data in the same format that is understood by the RTLIL Frontend.

With the exception of the AST Frontend, which is called by the high-level HDL frontends and can't be called directly by the user, all program modules are called by the user (usually using a synthesis script that contains text commands for Yosys).

By combining passes in different ways and/or adding additional passes to Yosys it is possible to adapt Yosys to a wide range of applications. For this to be possible it is key that (1) all passes operate on the same data structure (RTLIL) and (2) that this data structure is powerful enough to represent the design in different stages of the synthesis.

4.1.2 Control and data flow

Todo

less academic

The data- and control-flow of a typical synthesis tool is very similar to the data- and control-flow of a typical compiler: different subsystems are called in a predetermined order, each consuming the data generated by the last subsystem and generating the data for the next subsystem (see Fig. 4.2).

The first subsystem to be called is usually called a frontend. It does not process the data generated by another subsystem but instead reads the user input—in the case of a HDL synthesis tool, the behavioural HDL code.

The subsystems that consume data from previous subsystems and produce data for the next subsystems (usually in the same or a similar format) are called passes.

The last subsystem that is executed transforms the data generated by the last pass into a suitable output format and writes it to a disk file. This subsystem is usually called the backend.

In Yosys all frontends, passes and backends are directly available as commands in the synthesis script. Thus the user can easily create a custom synthesis flow just by calling passes in the right order in a synthesis

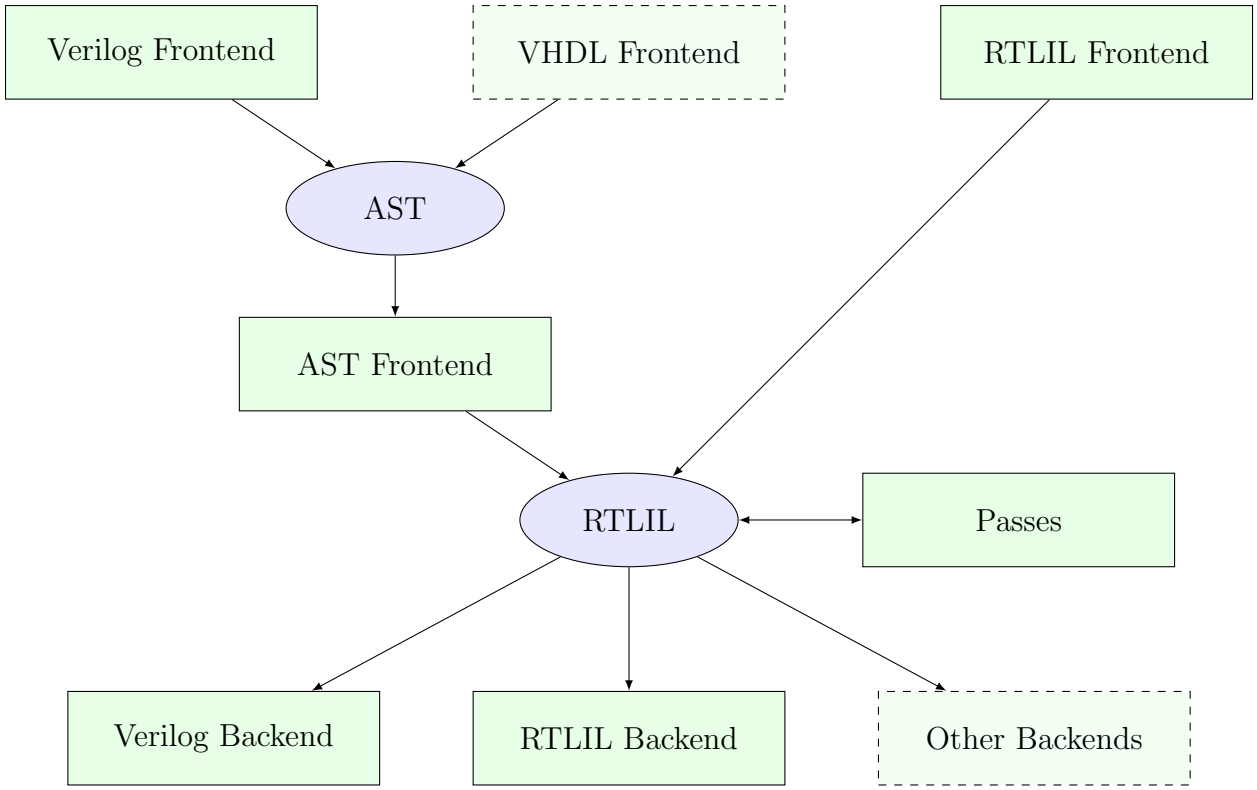

Fig. 4.1: Yosys simplified data flow (ellipses: data structures, rectangles: program modules)

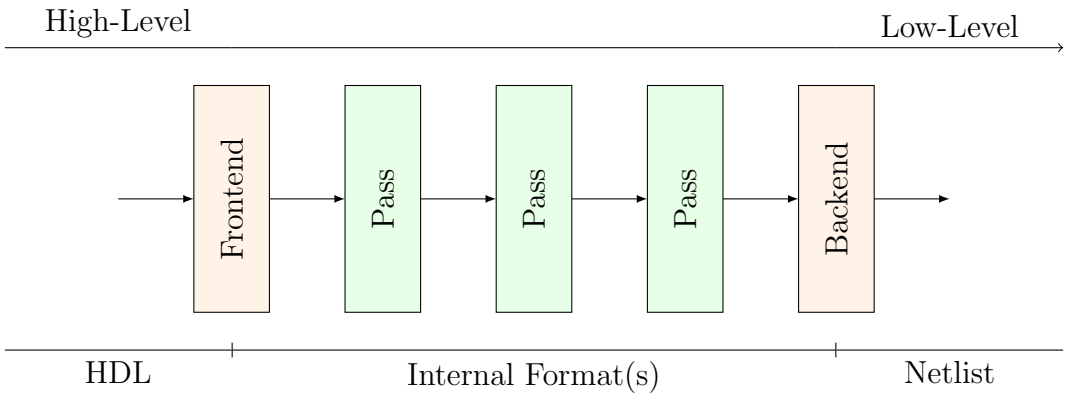

Fig. 4.2: General data- and control-flow of a synthesis tool

script.

4.1.3 The Verilog and AST frontends

This chapter provides an overview of the implementation of the Yosys Verilog and AST frontends. The Verilog frontend reads Verilog-2005 code and creates an abstract syntax tree (AST) representation of the input. This AST representation is then passed to the AST frontend that converts it to RTLIL data, as illustrated in Fig. 4.3.

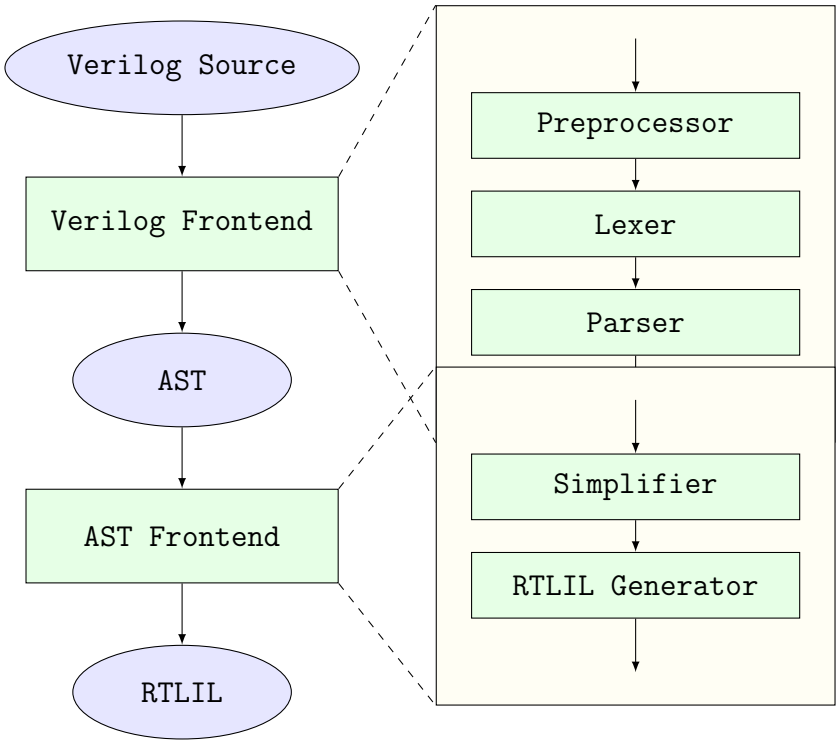

Fig. 4.3: Simplified Verilog to RTLIL data flow

Transforming Verilog to AST

The Verilog frontend converts the Verilog sources to an internal AST representation that closely resembles the structure of the original Verilog code. The Verilog frontend consists of three components, the Preprocessor, the Lexer and the Parser.

The source code to the Verilog frontend can be found in `frontends/verilog/` in the Yosys source tree.

The Verilog preprocessor

The Verilog preprocessor scans over the Verilog source code and interprets some of the Verilog compiler directives such as `` `include ``, `` `define `` and `` `ifdef ``.

It is implemented as a C++ function that is passed a file descriptor as input and returns the pre-processed Verilog code as a `std::string`.

The source code to the Verilog Preprocessor can be found in `frontends/verilog/preproc.cc` in the Yosys source tree.

The Verilog lexer

The Verilog Lexer is written using the lexer generator flex. Its source code can be found in `frontends/verilog/verilog_lexer.l` in the Yosys source tree. The lexer does little more than identifying all keywords and literals recognised by the Yosys Verilog frontend.

The lexer keeps track of the current location in the Verilog source code using some global variables. These variables are used by the constructor of AST nodes to annotate each node with the source code location it originated from.

Finally the lexer identifies and handles special comments such as "`// synopsys translate_off`" and "`// synopsys full_case`". (It is recommended to use `` `ifdef `` constructs instead of the Synsopsys translate_on/off comments and attributes such as `(* full_case *)` over "`// synopsys full_case`" whenever possible.)

The Verilog parser

The Verilog Parser is written using the parser generator bison. Its source code can be found in `frontends/verilog/verilog_parser.y` in the Yosys source tree.

It generates an AST using the `AST::AstNode` data structure defined in `frontends/ast/ast.h`. An `AST::AstNode` object has the following properties:

Table 4.1: AST node types with their corresponding Verilog constructs.

AST Node Type	Corresponding Verilog Construct
AST_NONE	This Node type should never be used.
AST_DESIGN	This node type is used for the top node of the AST tree. It has no corresponding Verilog construct.
AST_MODULE, AST_TASK, AST_FUNCTION	`module`, `task` and `function`
AST_WIRE	`input`, `output`, `wire`, `reg` and `integer`
AST_MEMORY	Verilog Arrays
AST_AUTOWIRE	Created by the simplifier when an undeclared signal name is used.
AST_PARAMETER, AST_LOCALPARAM	`parameter` and `localparam`
AST_PARASET	Parameter set in cell instantiation
AST_ARGUMENT	Port connection in cell instantiation
AST_RANGE	Bit-Index in a signal or element index in array
AST_CONSTANT	A literal value
AST_CELLTYPE	The type of cell in cell instantiation
AST_IDENTIFIER	An Identifier (signal name in expression or cell/task/etc. name in other contexts)
AST_PREFIX	Construct an identifier in the form <prefix>[<index>].<suffix> (used only in advanced generate constructs)
AST_FCALL, AST_TCALL	Call to function or task
AST_TO_SIGNED, AST_TO_UNSIGNED	The `$signed()` and `$unsigned()` functions
AST_CONCAT, AST_REPLICATE	The `{...}` and `{...{...}}` operators
AST_BIT_NOT, AST_BIT_AND, AST_BIT_OR, AST_BIT_XOR, AST_BIT_XNOR	The bitwise operators `~`, `&`, `|`, `^` and `~^`
AST_REDUCE_AND, AST_REDUCE_OR, AST_REDUCE_XOR, AST_REDUCE_XNOR	The unary reduction operators `~`, `&`, `|`, `^` and `~^`

continues on next page

Table 4.1 – continued from previous page

AST_REDUCE_BOOL	Conversion from multi-bit value to boolean value (equivalent to AST_REDUCE_OR)
AST_SHIFT_LEFT, AST_SHIFT_RIGHT, AST_SHIFT_SLEFT, AST_SHIFT_SRIGHT	The shift operators `<<`, `>>`, `<<<` and `>>>`
AST_LT, AST_LE, AST_EQ, AST_NE, AST_GE, AST_GT	The relational operators `<`, `<=`, `==`, `!=`, `>=` and `>`
AST_ADD, AST_SUB, AST_MUL, AST_DIV, AST_MOD, AST_POW	The binary operators `+`, `-`, `*`, `/`, `%` and `**`
AST_POS, AST_NEG	The prefix operators `+` and `-`
AST_LOGIC_AND, AST_LOGIC_OR, AST_LOGIC_NOT	The logic operators `&&`, `||` and `!`
AST_TERNARY	The ternary `?:`-operator
AST_MEMRD AST_MEMWR	Read and write memories. These nodes are generated by the AST simplifier for writes/reads to/from Verilog arrays.
AST_ASSIGN	An `assign` statement
AST_CELL	A cell instantiation
AST_PRIMITIVE	A primitive cell (`and`, `nand`, `or`, etc.)
AST_ALWAYS, AST_INITIAL	Verilog `always`- and `initial`-blocks
AST_BLOCK	A `begin`-`end`-block
AST_ASSIGN_EQ. AST_ASSIGN_LE	Blocking (`=`) and nonblocking (`<=`) assignments within an `always`- or `initial`-block
AST_CASE. AST_COND, AST_DEFAULT	The `case` (`if`) statements, conditions within a case and the default case respectively
AST_FOR	A `for`-loop with an `always`- or `initial`-block
AST_GENVAR, AST_GENBLOCK, AST_GENFOR, AST_GENIF	The `genvar` and `generate` keywords and `for` and `if` within a generate block.
AST_POSEDGE, AST_NEGEDGE, AST_EDGE	Event conditions for `always` blocks.

- The node type
  This enum (`AST::AstNodeType`) specifies the role of the node. Table 4.1 contains a list of all node types.
- The child nodes
  This is a list of pointers to all children in the abstract syntax tree.
- Attributes
  As almost every AST node might have Verilog attributes assigned to it, the `AST::AstNode` has direct support for attributes. Note that the attribute values are again AST nodes.
- Node content
  Each node might have additional content data. A series of member variables exist to hold such data. For example the member `std::string str` can hold a string value and is used e.g. in the `AST_IDENTIFIER` node type to store the identifier name.
- Source code location
  Each `AST::AstNode` is automatically annotated with the current source code location by the `AST::AstNode` constructor. It is stored in the `std::string filename` and `int linenum` member variables.

The `AST::AstNode` constructor can be called with up to two child nodes that are automatically added to the list of child nodes for the new object. This simplifies the creation of AST nodes for simple expressions a bit. For example the bison code for parsing multiplications:

```
basic_expr '*' attr basic_expr {
        $$ = new AstNode(AST_MUL, $1, $4);
        append_attr($$, $3);
} |
```

The generated AST data structure is then passed directly to the AST frontend that performs the actual conversion to RTLIL.

Note that the Yosys command `read_verilog` provides the options `-yydebug` and `-dump_ast` that can be used to print the parse tree or abstract syntax tree respectively.

Transforming AST to RTLIL

The AST Frontend converts a set of modules in AST representation to modules in RTLIL representation and adds them to the current design. This is done in two steps: simplification and RTLIL generation.

The source code to the AST frontend can be found in `frontends/ast/` in the Yosys source tree.

AST simplification

A full-featured AST is too complex to be transformed into RTLIL directly. Therefore it must first be brought into a simpler form. This is done by calling the `AST::AstNode::simplify()` method of all `AST_MODULE` nodes in the AST. This initiates a recursive process that performs the following transformations on the AST data structure:

- Inline all task and function calls.
- Evaluate all `generate`-statements and unroll all `for`-loops.
- Perform const folding where it is necessary (e.g. in the value part of `AST_PARAMETER`, `AST_LOCALPARAM`, `AST_PARASET` and `AST_RANGE` nodes).
- Replace `AST_PRIMITIVE` nodes with appropriate `AST_ASSIGN` nodes.
- Replace dynamic bit ranges in the left-hand-side of assignments with `AST_CASE` nodes with `AST_COND` children for each possible case.
- Detect array access patterns that are too complicated for the `RTLIL::Memory` abstraction and replace them with a set of signals and cases for all reads and/or writes.
- Otherwise replace array accesses with `AST_MEMRD` and `AST_MEMWR` nodes.

In addition to these transformations, the simplifier also annotates the AST with additional information that is needed for the RTLIL generator, namely:

- All ranges (width of signals and bit selections) are not only const folded but (when a constant value is found) are also written to member variables in the AST_RANGE node.
- All identifiers are resolved and all `AST_IDENTIFIER` nodes are annotated with a pointer to the AST node that contains the declaration of the identifier. If no declaration has been found, an `AST_AUTOWIRE` node is created and used for the annotation.

This produces an AST that is fairly easy to convert to the RTLIL format.

Generating RTLIL

After AST simplification, the `AST::AstNode::genRTLIL()` method of each `AST_MODULE` node in the AST is called. This initiates a recursive process that generates equivalent RTLIL data for the AST data.

The `AST::AstNode::genRTLIL()` method returns an `RTLIL::SigSpec` structure. For nodes that represent expressions (operators, constants, signals, etc.), the cells needed to implement the calculation described by

the expression are created and the resulting signal is returned. That way it is easy to generate the circuits for large expressions using depth-first recursion. For nodes that do not represent an expression (such as `AST_CELL`), the corresponding circuit is generated and an empty `RTLIL::SigSpec` is returned.

Synthesizing Verilog always blocks

For behavioural Verilog code (code utilizing `always`- and `initial`-blocks) it is necessary to also generate `RTLIL::Process` objects. This is done in the following way:

Whenever `AST::AstNode::genRTLIL()` encounters an `always`- or `initial`-block, it creates an instance of `AST_INTERNAL::ProcessGenerator`. This object then generates the `RTLIL::Process` object for the block. It also calls `AST::AstNode::genRTLIL()` for all right-hand-side expressions contained within the block.

First the `AST_INTERNAL::ProcessGenerator` creates a list of all signals assigned within the block. It then creates a set of temporary signals using the naming scheme `$ <number> \ <original_name>` for each of the assigned signals.

Then an `RTLIL::Process` is created that assigns all intermediate values for each left-hand-side signal to the temporary signal in its `RTLIL::CaseRule`/`RTLIL::SwitchRule` tree.

Finally a `RTLIL::SyncRule` is created for the `RTLIL::Process` that assigns the temporary signals for the final values to the actual signals.

A process may also contain memory writes. A `RTLIL::MemWriteAction` is created for each of them.

Calls to `AST::AstNode::genRTLIL()` are generated for right hand sides as needed. When blocking assignments are used, `AST::AstNode::genRTLIL()` is configured using global variables to use the temporary signals that hold the correct intermediate values whenever one of the previously assigned signals is used in an expression.

Unfortunately the generation of a correct `RTLIL::CaseRule`/`RTLIL::SwitchRule` tree for behavioural code is a non-trivial task. The AST frontend solves the problem using the approach described on the following pages. The following example illustrates what the algorithm is supposed to do. Consider the following Verilog code:

```
always @(posedge clock) begin
    out1 = in1;
    if (in2)
        out1 = !out1;
    out2 <= out1;
    if (in3)
        out2 <= out2;
    if (in4)
        if (in5)
            out3 <= in6;
        else
            out3 <= in7;
    out1 = out1 ^ out2;
end
```

This is translated by the Verilog and AST frontends into the following RTLIL code (attributes, cell parameters and wire declarations not included):

```
cell $logic_not $logic_not$<input>:4$2
  connect \A \in1
  connect \Y $logic_not$<input>:4$2_Y
end
```

(continues on next page)

(continued from previous page)

```
cell $xor $xor$<input>:13$3
  connect \A $1\out1[0:0]
  connect \B \out2
  connect \Y $xor$<input>:13$3_Y
end
process $proc$<input>:1$1
  assign $0\out3[0:0] \out3
  assign $0\out2[0:0] $1\out1[0:0]
  assign $0\out1[0:0] $xor$<input>:13$3_Y
  switch \in2
    case 1'1
      assign $1\out1[0:0] $logic_not$<input>:4$2_Y
    case
      assign $1\out1[0:0] \in1
  end
  switch \in3
    case 1'1
      assign $0\out2[0:0] \out2
    case
  end
  switch \in4
    case 1'1
      switch \in5
        case 1'1
          assign $0\out3[0:0] \in6
        case
          assign $0\out3[0:0] \in7
      end
    case
  end
  sync posedge \clock
    update \out1 $0\out1[0:0]
    update \out2 $0\out2[0:0]
    update \out3 $0\out3[0:0]
end
```

Note that the two operators are translated into separate cells outside the generated process. The signal `out1` is assigned using blocking assignments and therefore `out1` has been replaced with a different signal in all expressions after the initial assignment. The signal `out2` is assigned using nonblocking assignments and therefore is not substituted on the right-hand-side expressions.

The `RTLIL::CaseRule`/`RTLIL::SwitchRule` tree must be interpreted the following way:

- On each case level (the body of the process is the root case), first the actions on this level are evaluated and then the switches within the case are evaluated. (Note that the last assignment on line 13 of the Verilog code has been moved to the beginning of the RTLIL process to line 13 of the RTLIL listing.)

  I.e. the special cases deeper in the switch hierarchy override the defaults on the upper levels. The assignments in lines 12 and 22 of the RTLIL code serve as an example for this.

  Note that in contrast to this, the order within the `RTLIL::SwitchRule` objects within a `RTLIL::CaseRule` is preserved with respect to the original AST and Verilog code.

- The whole `RTLIL::CaseRule`/`RTLIL::SwitchRule` tree describes an asynchronous circuit. I.e. the decision tree formed by the switches can be seen independently for each assigned signal. Whenever one

assigned signal changes, all signals that depend on the changed signals are to be updated. For example the assignments in lines 16 and 18 in the RTLIL code in fact influence the assignment in line 12, even though they are in the "wrong order".

The only synchronous part of the process is in the `RTLIL::SyncRule` object generated at line 35 in the RTLIL code. The sync rule is the only part of the process where the original signals are assigned. The synchronization event from the original Verilog code has been translated into the synchronization type (posedge) and signal (`\clock`) for the `RTLIL::SyncRule` object. In the case of this simple example the `RTLIL::SyncRule` object is later simply transformed into a set of d-type flip-flops and the `RTLIL::CaseRule`/`RTLIL::SwitchRule` tree to a decision tree using multiplexers.

In more complex examples (e.g. asynchronous resets) the part of the `RTLIL::CaseRule`/`RTLIL::SwitchRule` tree that describes the asynchronous reset must first be transformed to the correct `RTLIL::SyncRule` objects. This is done by the `proc_arst` pass.

The ProcessGenerator algorithm

The `AST_INTERNAL::ProcessGenerator` uses the following internal state variables:

- `subst_rvalue_from` and `subst_rvalue_to`
  These two variables hold the replacement pattern that should be used by `AST::AstNode::genRTLIL()` for signals with blocking assignments. After initialization of `AST_INTERNAL::ProcessGenerator` these two variables are empty.
- `subst_lvalue_from` and `subst_lvalue_to`
  These two variables contain the mapping from left-hand-side signals (`\ <name>`) to the current temporary signal for the same thing (initially `$0\ <name>`).
- `current_case`
  A pointer to a `RTLIL::CaseRule` object. Initially this is the root case of the generated `RTLIL::Process`.

As the algorithm runs these variables are continuously modified as well as pushed to the stack and later restored to their earlier values by popping from the stack.

On startup the ProcessGenerator generates a new `RTLIL::Process` object with an empty root case and initializes its state variables as described above. Then the `RTLIL::SyncRule` objects are created using the synchronization events from the AST_ALWAYS node and the initial values of `subst_lvalue_from` and `subst_lvalue_to`. Then the AST for this process is evaluated recursively.

During this recursive evaluation, three different relevant types of AST nodes can be discovered: `AST_ASSIGN_LE` (nonblocking assignments), `AST_ASSIGN_EQ` (blocking assignments) and `AST_CASE` (`if` or `case` statement).

Handling of nonblocking assignments

When an `AST_ASSIGN_LE` node is discovered, the following actions are performed by the ProcessGenerator:

- The left-hand-side is evaluated using `AST::AstNode::genRTLIL()` and mapped to a temporary signal name using `subst_lvalue_from` and `subst_lvalue_to`.
- The right-hand-side is evaluated using `AST::AstNode::genRTLIL()`. For this call, the values of `subst_rvalue_from` and `subst_rvalue_to` are used to map blocking-assigned signals correctly.
- Remove all assignments to the same left-hand-side as this assignment from the `current_case` and all cases within it.
- Add the new assignment to the `current_case`.

Handling of blocking assignments

When an AST_ASSIGN_EQ node is discovered, the following actions are performed by the ProcessGenerator:

- Perform all the steps that would be performed for a nonblocking assignment (see above).
- Remove the found left-hand-side (before lvalue mapping) from subst_rvalue_from and also remove the respective bits from subst_rvalue_to.
- Append the found left-hand-side (before lvalue mapping) to subst_rvalue_from and append the found right-hand-side to subst_rvalue_to.

Handling of cases and if-statements

When an AST_CASE node is discovered, the following actions are performed by the ProcessGenerator:

- The values of subst_rvalue_from, subst_rvalue_to, subst_lvalue_from and subst_lvalue_to are pushed to the stack.
- A new RTLIL::SwitchRule object is generated, the selection expression is evaluated using AST::AstNode::genRTLIL() (with the use of subst_rvalue_from and subst_rvalue_to) and added to the RTLIL::SwitchRule object and the object is added to the current_case.
- All lvalues assigned to within the AST_CASE node using blocking assignments are collected and saved in the local variable this_case_eq_lvalue.
- New temporary signals are generated for all signals in this_case_eq_lvalue and stored in this_case_eq_ltemp.
- The signals in this_case_eq_lvalue are mapped using subst_rvalue_from and subst_rvalue_to and the resulting set of signals is stored in this_case_eq_rvalue.

Then the following steps are performed for each AST_COND node within the AST_CASE node:

- Set subst_rvalue_from, subst_rvalue_to, subst_lvalue_from and subst_lvalue_to to the values that have been pushed to the stack.
- Remove this_case_eq_lvalue from subst_lvalue_from/subst_lvalue_to.
- Append this_case_eq_lvalue to subst_lvalue_from and append this_case_eq_ltemp to subst_lvalue_to.
- Push the value of current_case.
- Create a new RTLIL::CaseRule. Set current_case to the new object and add the new object to the RTLIL::SwitchRule created above.
- Add an assignment from this_case_eq_rvalue to this_case_eq_ltemp to the new current_case.
- Evaluate the compare value for this case using AST::AstNode::genRTLIL() (with the use of subst_rvalue_from and subst_rvalue_to) modify the new current_case accordingly.
- Recursion into the children of the AST_COND node.
- Restore current_case by popping the old value from the stack.

Finally the following steps are performed:

- The values of subst_rvalue_from, subst_rvalue_to, subst_lvalue_from and subst_lvalue_to are popped from the stack.
- The signals from this_case_eq_lvalue are removed from the subst_rvalue_from/subst_rvalue_to-pair.

- The value of `this_case_eq_lvalue` is appended to `subst_rvalue_from` and the value of `this_case_eq_ltemp` is appended to `subst_rvalue_to`.
- Map the signals in `this_case_eq_lvalue` using `subst_lvalue_from`/`subst_lvalue_to`.
- Remove all assignments to signals in `this_case_eq_lvalue` in `current_case` and all cases within it.
- Add an assignment from `this_case_eq_ltemp` to `this_case_eq_lvalue` to `current_case`.

Further analysis of the algorithm for cases and if-statements

With respect to nonblocking assignments the algorithm is easy: later assignments invalidate earlier assignments. For each signal assigned using nonblocking assignments exactly one temporary variable is generated (with the `$0`-prefix) and this variable is used for all assignments of the variable.

Note how all the `_eq_`-variables become empty when no blocking assignments are used and many of the steps in the algorithm can then be ignored as a result of this.

For a variable with blocking assignments the algorithm shows the following behaviour: First a new temporary variable is created. This new temporary variable is then registered as the assignment target for all assignments for this variable within the cases for this `AST_CASE` node. Then for each case the new temporary variable is first assigned the old temporary variable. This assignment is overwritten if the variable is actually assigned in this case and is kept as a default value otherwise.

This yields an `RTLIL::CaseRule` that assigns the new temporary variable in all branches. So when all cases have been processed a final assignment is added to the containing block that assigns the new temporary variable to the old one. Note how this step always overrides a previous assignment to the old temporary variable. Other than nonblocking assignments, the old assignment could still have an effect somewhere in the design, as there have been calls to `AST::AstNode::genRTLIL()` with a `subst_rvalue_from`/`subst_rvalue_to`-tuple that contained the right-hand-side of the old assignment.

The proc pass

The ProcessGenerator converts a behavioural model in AST representation to a behavioural model in `RTLIL::Process` representation. The actual conversion from a behavioural model to an RTL representation is performed by the *proc* pass and the passes it launches:

- *proc_clean* and *proc_rmdead*
  These two passes just clean up the `RTLIL::Process` structure. The *proc_clean* pass removes empty parts (eg. empty assignments) from the process and *proc_rmdead* detects and removes unreachable branches from the process's decision trees.
- *proc_arst*
  This pass detects processes that describe d-type flip-flops with asynchronous resets and rewrites the process to better reflect what they are modelling: Before this pass, an asynchronous reset has two edge-sensitive sync rules and one top-level `RTLIL::SwitchRule` for the reset path. After this pass the sync rule for the reset is level-sensitive and the top-level `RTLIL::SwitchRule` has been removed.
- *proc_mux*
  This pass converts the `RTLIL::CaseRule`/`RTLIL::SwitchRule`-tree to a tree of multiplexers per written signal. After this, the `RTLIL::Process` structure only contains the `RTLIL::SyncRule` s that describe the output registers.
- *proc_dff*
  This pass replaces the `RTLIL::SyncRule`s to d-type flip-flops (with asynchronous resets if necessary).
- *proc_dff*
  This pass replaces the `RTLIL::MemWriteAction`s with *$memwr* cells.

- *proc_clean*
  A final call to *proc_clean* removes the now empty `RTLIL::Process` objects.

Performing these last processing steps in passes instead of in the Verilog frontend has two important benefits:

First it improves the transparency of the process. Everything that happens in a separate pass is easier to debug, as the RTLIL data structures can be easily investigated before and after each of the steps.

Second it improves flexibility. This scheme can easily be extended to support other types of storage-elements, such as sr-latches or d-latches, without having to extend the actual Verilog frontend.

Todo

Synthesizing Verilog arrays

Add some information on the generation of *$memrd* and *$memwr* cells and how they are processed in the memory pass.

Todo

Synthesizing parametric designs

Add some information on the `RTLIL::Module::derive()` method and how it is used to synthesize parametric modules via the hierarchy pass.

4.2 Internal formats

Yosys uses two different internal formats. The first is used to store an abstract syntax tree (AST) of a Verilog input file. This format is simply called AST and is generated by the Verilog Frontend. This data structure is consumed by a subsystem called AST Frontend[1]. This AST Frontend then generates a design in Yosys' main internal format, the Register-Transfer-Level-Intermediate-Language (RTLIL) representation. It does that by first performing a number of simplifications within the AST representation and then generating RTLIL from the simplified AST data structure.

The RTLIL representation is used by all passes as input and outputs. This has the following advantages over using different representational formats between different passes:

- The passes can be rearranged in a different order and passes can be removed or inserted.
- Passes can simply pass-thru the parts of the design they don't change without the need to convert between formats. In fact Yosys passes output the same data structure they received as input and performs all changes in place.
- All passes use the same interface, thus reducing the effort required to understand a pass when reading the Yosys source code, e.g. when adding additional features.

The RTLIL representation is basically a netlist representation with the following additional features:

- An internal cell library with fixed-function cells to represent RTL datapath and register cells as well as logical gate-level cells (single-bit gates and registers).
- Support for multi-bit values that can use individual bits from wires as well as constant bits to represent coarse-grain netlists.
- Support for basic behavioural constructs (if-then-else structures and multi-case switches with a sensitivity list for updating the outputs).

[1] In Yosys the term pass is only used to refer to commands that operate on the RTLIL data structure.

- Support for multi-port memories.

The use of RTLIL also has the disadvantage of having a very powerful format between all passes, even when doing gate-level synthesis where the more advanced features are not needed. In order to reduce complexity for passes that operate on a low-level representation, these passes check the features used in the input RTLIL and fail to run when unsupported high-level constructs are used. In such cases a pass that transforms the higher-level constructs to lower-level constructs must be called from the synthesis script first.

4.2.1 The RTL Intermediate Language (RTLIL)

All frontends, passes and backends in Yosys operate on a design in RTLIL representation. The only exception are the high-level frontends that use the AST representation as an intermediate step before generating RTLIL data.

In order to avoid reinventing names for the RTLIL classes, they are simply referred to by their full C++ name, i.e. including the `RTLIL::` namespace prefix, in this document.

Figure 4.4 shows a simplified Entity-Relationship Diagram (ER Diagram) of RTLIL. In $1 : N$ relationships the arrow points from the N side to the 1. For example one `RTLIL::Design` contains N (zero to many) instances of `RTLIL::Module` . A two-pointed arrow indicates a $1 : 1$ relationship.

The `RTLIL::Design` is the root object of the RTLIL data structure. There is always one "current design" in memory which passes operate on, frontends add data to and backends convert to exportable formats. But in some cases passes internally generate additional `RTLIL::Design` objects. For example when a pass is reading an auxiliary Verilog file such as a cell library, it might create an additional `RTLIL::Design` object and call the Verilog frontend with this other object to parse the cell library.

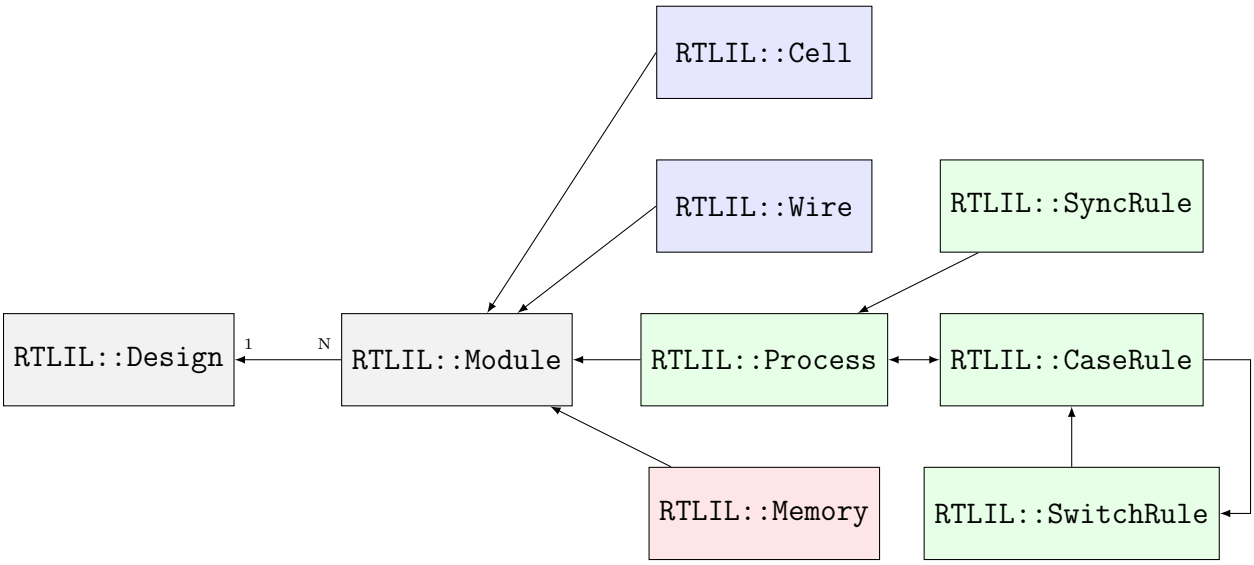

Fig. 4.4: Simplified RTLIL Entity-Relationship Diagram

There is only one active `RTLIL::Design` object that is used by all frontends, passes and backends called by the user, e.g. using a synthesis script. The `RTLIL::Design` then contains zero to many `RTLIL::Module` objects. This corresponds to modules in Verilog or entities in VHDL. Each module in turn contains objects from three different categories:

- `RTLIL::Cell` and `RTLIL::Wire` objects represent classical netlist data.
- `RTLIL::Process` objects represent the decision trees (if-then-else statements, etc.) and synchronization declarations (clock signals and sensitivity) from Verilog always and VHDL process blocks.

- `RTLIL::Memory` objects represent addressable memories (arrays).

Usually the output of the synthesis procedure is a netlist, i.e. all `RTLIL::Process` and `RTLIL::Memory` objects must be replaced by `RTLIL::Cell` and `RTLIL::Wire` objects by synthesis passes.

All features of the HDL that cannot be mapped directly to these RTLIL classes must be transformed to an RTLIL-compatible representation by the HDL frontend. This includes Verilog-features such as generate-blocks, loops and parameters.

The following sections contain a more detailed description of the different parts of RTLIL and rationale behind some of the design decisions.

RTLIL identifiers

All identifiers in RTLIL (such as module names, port names, signal names, cell types, etc.) follow the following naming convention: they must either start with a backslash (\) or a dollar sign ($).

Identifiers starting with a backslash are public visible identifiers. Usually they originate from one of the HDL input files. For example the signal name `\sig42` is most likely a signal that was declared using the name `sig42` in an HDL input file. On the other hand the signal name `$sig42` is an auto-generated signal name. The backends convert all identifiers that start with a dollar sign to identifiers that do not collide with identifiers that start with a backslash.

This has three advantages:

- First, it is impossible that an auto-generated identifier collides with an identifier that was provided by the user.
- Second, the information about which identifiers were originally provided by the user is always available which can help guide some optimizations. For example, *`opt_clean`* tries to preserve signals with a user-provided name but doesn't hesitate to delete signals that have auto-generated names when they just duplicate other signals. Note that this can be overridden with the `-purge` option to also delete internal nets with user-provided names.
- Third, the delicate job of finding suitable auto-generated public visible names is deferred to one central location. Internally auto-generated names that may hold important information for Yosys developers can be used without disturbing external tools. For example the Verilog backend assigns names in the form `_123_`.

Whitespace and control characters (any character with an ASCII code 32 or less) are not allowed in RTLIL identifiers; most frontends and backends cannot support these characters in identifiers.

In order to avoid programming errors, the RTLIL data structures check if all identifiers start with either a backslash or a dollar sign, and contain no whitespace or control characters. Violating these rules results in a runtime error.

All RTLIL identifiers are case sensitive.

Some transformations, such as flattening, may have to change identifiers provided by the user to avoid name collisions. When that happens, attribute `hdlname` is attached to the object with the changed identifier. This attribute contains one name (if emitted directly by the frontend, or is a result of disambiguation) or multiple names separated by spaces (if a result of flattening). All names specified in the `hdlname` attribute are public and do not include the leading \.

RTLIL::Design and RTLIL::Module

The `RTLIL::Design` object is basically just a container for `RTLIL::Module` objects. In addition to a list of `RTLIL::Module` objects the `RTLIL::Design` also keeps a list of selected objects, i.e. the objects that passes should operate on. In most cases the whole design is selected and therefore passes operate on the whole design. But this mechanism can be useful for more complex synthesis jobs in which only parts of the design should be affected by certain passes.

Besides the objects shown in the *ER diagram* above, an `RTLIL::Module` object contains the following additional properties:

- The module name
- A list of attributes
- A list of connections between wires
- An optional frontend callback used to derive parametrized variations of the module

The attributes can be Verilog attributes imported by the Verilog frontend or attributes assigned by passes. They can be used to store additional metadata about modules or just mark them to be used by certain part of the synthesis script but not by others.

Verilog and VHDL both support parametric modules (known as "generic entities" in VHDL). The RTLIL format does not support parametric modules itself. Instead each module contains a callback function into the AST frontend to generate a parametrized variation of the `RTLIL::Module` as needed. This callback then returns the auto-generated name of the parametrized variation of the module. (A hash over the parameters and the module name is used to prohibit the same parametrized variation from being generated twice. For modules with only a few parameters, a name directly containing all parameters is generated instead of a hash string.)

RTLIL::Cell and RTLIL::Wire

A module contains zero to many `RTLIL::Cell` and `RTLIL::Wire` objects. Objects of these types are used to model netlists. Usually the goal of all synthesis efforts is to convert all modules to a state where the functionality of the module is implemented only by cells from a given cell library and wires to connect these cells with each other. Note that module ports are just wires with a special property.

An `RTLIL::Wire` object has the following properties:

- The wire name
- A list of attributes
- A width (buses are just wires with a width more than 1)
- Bus direction (MSB to LSB or vice versa)
- Lowest valid bit index (LSB or MSB depending on bus direction)
- If the wire is a port: port number and direction (input/output/inout)

As with modules, the attributes can be Verilog attributes imported by the Verilog frontend or attributes assigned by passes.

In Yosys, busses (signal vectors) are represented using a single wire object with a width more than 1. So Yosys does not convert signal vectors to individual signals. This makes some aspects of RTLIL more complex but enables Yosys to be used for coarse grain synthesis where the cells of the target architecture operate on entire signal vectors instead of single bit wires.

In Verilog and VHDL, busses may have arbitrary bounds, and LSB can have either the lowest or the highest bit index. In RTLIL, bit 0 always corresponds to LSB; however, information from the HDL frontend is preserved so that the bus will be correctly indexed in error messages, backend output, constraint files, etc.

An `RTLIL::Cell` object has the following properties:

- The cell name and type
- A list of attributes
- A list of parameters (for parametric cells)
- Cell ports and the connections of ports to wires and constants

The connections of ports to wires are coded by assigning an `RTLIL::SigSpec` to each cell port. The `RTLIL::SigSpec` data type is described in the next section.

RTLIL::SigSpec

A "signal" is everything that can be applied to a cell port. I.e.

- Any constant value of arbitrary bit-width
  1em For example: `1337, 16'b0000010100111001, 1'b1, 1'bx`
- All bits of a wire or a selection of bits from a wire
  1em For example: `mywire, mywire[24], mywire[15:8]`
- Concatenations of the above
  1em For example: `{16'd1337, mywire[15:8]}`

The `RTLIL::SigSpec` data type is used to represent signals. The `RTLIL::Cell` object contains one `RTLIL::SigSpec` for each cell port.

In addition, connections between wires are represented using a pair of `RTLIL::SigSpec` objects. Such pairs are needed in different locations. Therefore the type name `RTLIL::SigSig` was defined for such a pair.

RTLIL::Process

When a high-level HDL frontend processes behavioural code it splits it up into data path logic (e.g. the expression `a + b` is replaced by the output of an adder that takes a and b as inputs) and an `RTLIL::Process` that models the control logic of the behavioural code. Let's consider a simple example:

```
module ff_with_en_and_async_reset(clock, reset, enable, d, q);
input clock, reset, enable, d;
output reg q;
always @(posedge clock, posedge reset)
    if (reset)
        q <= 0;
    else if (enable)
        q <= d;
endmodule
```

In this example there is no data path and therefore the `RTLIL::Module` generated by the frontend only contains a few `RTLIL::Wire` objects and an `RTLIL::Process`. The `RTLIL::Process` in RTLIL syntax:

```
process $proc$ff_with_en_and_async_reset.v:4$1
    assign $0\q[0:0] \q
    switch \reset
        case 1'1
            assign $0\q[0:0] 1'0
        case
            switch \enable
                case 1'1
                    assign $0\q[0:0] \d
                case
            end
    end
    sync posedge \clock
        update \q $0\q[0:0]
    sync posedge \reset
```

(continues on next page)

(continued from previous page)

```
16          update \q $0\q[0:0]
17  end
```

This `RTLIL::Process` contains two `RTLIL::SyncRule` objects, two `RTLIL::SwitchRule` objects and five `RTLIL::CaseRule` objects. The wire `$0\q[0:0]` is an automatically created wire that holds the next value of `\q`. The lines 2..12 describe how `$0\q[0:0]` should be calculated. The lines 13..16 describe how the value of `$0\q[0:0]` is used to update `\q`.

An `RTLIL::Process` is a container for zero or more `RTLIL::SyncRule` objects and exactly one `RTLIL::CaseRule` object, which is called the root case.

An `RTLIL::SyncRule` object contains an (optional) synchronization condition (signal and edge-type), zero or more assignments (`RTLIL::SigSig`), and zero or more memory writes (`RTLIL::MemWriteAction`). The always synchronization condition is used to break combinatorial loops when a latch should be inferred instead.

An `RTLIL::CaseRule` is a container for zero or more assignments (`RTLIL::SigSig`) and zero or more `RTLIL::SwitchRule` objects. An `RTLIL::SwitchRule` objects is a container for zero or more `RTLIL::CaseRule` objects.

In the above example the lines 2..12 are the root case. Here `$0\q[0:0]` is first assigned the old value `\q` as default value (line 2). The root case also contains an `RTLIL::SwitchRule` object (lines 3..12). Such an object is very similar to the C switch statement as it uses a control signal (`\reset` in this case) to determine which of its cases should be active. The `RTLIL::SwitchRule` object then contains one `RTLIL::CaseRule` object per case. In this example there is a case[1] for `\reset == 1` that causes `$0\q[0:0]` to be set (lines 4 and 5) and a default case that in turn contains a switch that sets `$0\q[0:0]` to the value of `\d` if `\enable` is active (lines 6..11).

A case can specify zero or more compare values that will determine whether it matches. Each of the compare values must be the exact same width as the control signal. When more than one compare value is specified, the case matches if any of them matches the control signal; when zero compare values are specified, the case always matches (i.e. it is the default case).

A switch prioritizes cases from first to last: multiple cases can match, but only the first matched case becomes active. This normally synthesizes to a priority encoder. The parallel_case attribute allows passes to assume that no more than one case will match, and full_case attribute allows passes to assume that exactly one case will match; if these invariants are ever dynamically violated, the behavior is undefined. These attributes are useful when an invariant invisible to the synthesizer causes the control signal to never take certain bit patterns.

The lines 13..16 then cause `\q` to be updated whenever there is a positive clock edge on `\clock` or `\reset`.

In order to generate such a representation, the language frontend must be able to handle blocking and nonblocking assignments correctly. However, the language frontend does not need to identify the correct type of storage element for the output signal or generate multiplexers for the decision tree. This is done by passes that work on the RTLIL representation. Therefore it is relatively easy to substitute these steps with other algorithms that target different target architectures or perform optimizations or other transformations on the decision trees before further processing them.

One of the first actions performed on a design in RTLIL representation in most synthesis scripts is identifying asynchronous resets. This is usually done using the *proc_arst* pass. This pass transforms the above example to the following `RTLIL::Process`:

```
1  process $proc$ff_with_en_and_async_reset.v:4$1
2      assign $0\q[0:0] \q
```

(continues on next page)

[1] The syntax `1'1` in the RTLIL code specifies a constant with a length of one bit (the first `1`), and this bit is a one (the second `1`).

(continued from previous page)

```
    switch \enable
        case 1'1
            assign $0\q[0:0] \d
        case
    end
    sync posedge \clock
        update \q $0\q[0:0]
    sync high \reset
        update \q 1'0
end
```

This pass has transformed the outer `RTLIL::SwitchRule` into a modified `RTLIL::SyncRule` object for the `\reset` signal. Further processing converts the `RTLIL::Process` into e.g. a d-type flip-flop with asynchronous reset and a multiplexer for the enable signal:

```
cell $adff $procdff$6
    parameter \ARST_POLARITY 1'1
    parameter \ARST_VALUE 1'0
    parameter \CLK_POLARITY 1'1
    parameter \WIDTH 1
    connect \ARST \reset
    connect \CLK \clock
    connect \D $0\q[0:0]
    connect \Q \q
end
cell $mux $procmux$3
    parameter \WIDTH 1
    connect \A \q
    connect \B \d
    connect \S \enable
    connect \Y $0\q[0:0]
end
```

Different combinations of passes may yield different results. Note that *$adff* and *$mux* are internal cell types that still need to be mapped to cell types from the target cell library.

Some passes refuse to operate on modules that still contain `RTLIL::Process` objects as the presence of these objects in a module increases the complexity. Therefore the passes to translate processes to a netlist of cells are usually called early in a synthesis script. The proc pass calls a series of other passes that together perform this conversion in a way that is suitable for most synthesis tasks.

RTLIL::Memory

For every array (memory) in the HDL code an `RTLIL::Memory` object is created. A memory object has the following properties:

- The memory name
- A list of attributes
- The width of an addressable word
- The size of the memory in number of words

All read accesses to the memory are transformed to *$memrd* cells and all write accesses to *$memwr* cells by the language frontend. These cells consist of independent read- and write-ports to the memory. Memory

initialization is transformed to *$meminit* cells by the language frontend. The `\MEMID` parameter on these cells is used to link them together and to the `RTLIL::Memory` object they belong to.

The rationale behind using separate cells for the individual ports versus creating a large multiport memory cell right in the language frontend is that the separate *$memrd* and *$memwr* cells can be consolidated using resource sharing. As resource sharing is a non-trivial optimization problem where different synthesis tasks can have different requirements it lends itself to do the optimisation in separate passes and merge the `RTLIL::Memory` objects and *$memrd* and *$memwr* cells to multiport memory blocks after resource sharing is completed.

The memory pass performs this conversion and can (depending on the options passed to it) transform the memories directly to d-type flip-flops and address logic or yield multiport memory blocks (represented using *$mem* cells).

See *Memories* for details about the memory cell types.

4.3 Working with the Yosys codebase

This section goes into additional detail on the Yosys source code and git repository. This information is not needed for simply using Yosys, but may be of interest for developers looking to customise Yosys builds.

4.3.1 Writing extensions

Todo

check text is coherent

Todo

update to use `/code_examples/extensions/test*.log`

This chapter contains some bits and pieces of information about programming yosys extensions. Don't be afraid to ask questions on the YosysHQ Slack.

Todo

mention coding guide

Quick guide

Code examples from this section are included in the `docs/source/code_examples/extensions` directory of the Yosys source code.

Program components and data formats

See *The RTL Intermediate Language (RTLIL)* document for more information about the internal data storage format used in Yosys and the classes that it provides.

This document will focus on the much simpler version of RTLIL left after the commands *proc* and *memory* (or `memory -nomap`):

It is possible to only work on this simpler version:

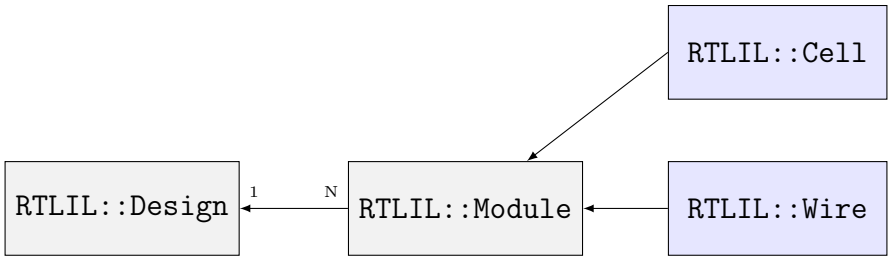

Fig. 4.5: Simplified RTLIL entity-relationship diagram without memories and processes

Todo

consider replacing inline code

```
for (RTLIL::Module *module : design->selected_modules() {
    if (module->has_memories_warn() || module->has_processes_warn())
        continue;
    ....
}
```

When trying to understand what a command does, creating a small test case to look at the output of *dump* and *show* before and after the command has been executed can be helpful. *Selections* has more information on using these commands.

Creating a command

Todo

add/expand supporting text

Let's create a very simple test command which prints the arguments we called it with, and lists off the current design's modules.

Listing 4.1: Example command `my_cmd` from `my_cmd.cc`

```
#include "kernel/yosys.h"
USING_YOSYS_NAMESPACE

struct MyPass : public Pass {
    MyPass() : Pass("my_cmd", "just a simple test") { }
    void execute(std::vector<std::string> args, RTLIL::Design *design) override
    {
        log("Arguments to my_cmd:\n");
        for (auto &arg : args)
            log("  %s\n", arg.c_str());

        log("Modules in current design:\n");
        for (auto mod : design->modules())
            log("  %s (%d wires, %d cells)\n", log_id(mod),
```

(continues on next page)

(continued from previous page)

```
                    GetSize(mod->wires()), GetSize(mod->cells()));
    }
} MyPass;
```

Note that we are making a global instance of a class derived from `Yosys::Pass`, which we get by including `kernel/yosys.h`.

Compiling to a plugin

Yosys can be extended by adding additional C++ code to the Yosys code base, or by loading plugins into Yosys. For maintainability it is generally recommended to create plugins.

The following command compiles our example `my_cmd` to a Yosys plugin:

Todo

replace inline code

```
yosys-config --exec --cxx --cxxflags --ldflags \
-o my_cmd.so -shared my_cmd.cc --ldlibs
```

Or shorter:

```
yosys-config --build my_cmd.so my_cmd.cc
```

Running Yosys with the `-m` option allows the plugin to be used. Here's a quick example that also uses the `-p` option to run `my_cmd foo bar`.

```
$ yosys -m ./my_cmd.so -p 'my_cmd foo bar'

-- Running command `my_cmd foo bar' --
Arguments to my_cmd:
  my_cmd
  foo
  bar
Modules in current design:
```

Creating modules from scratch

Let's create the following module using the RTLIL API:

Listing 4.2: absval_ref.v

```
module absval_ref(input signed [3:0] a, output [3:0] y);
        assign y = a[3] ? -a : a;
endmodule
```

We'll do the same as before and format it as a a `Yosys::Pass`.

Listing 4.3: `test1` - creating the absval module, from `my_cmd.cc`

```
struct Test1Pass : public Pass {
    Test1Pass() : Pass("test1", "creating the absval module") { }
    void execute(std::vector<std::string>, RTLIL::Design *design) override
    {
        if (design->has("\\absval") != 0)
            log_error("A module with the name absval already exists!\n");

        RTLIL::Module *module = design->addModule("\\absval");
        log("Name of this module: %s\n", log_id(module));

        RTLIL::Wire *a = module->addWire("\\a", 4);
        a->port_input = true;
        a->port_id = 1;

        RTLIL::Wire *y = module->addWire("\\y", 4);
        y->port_output = true;
        y->port_id = 2;

        RTLIL::Wire *a_inv = module->addWire(NEW_ID, 4);
        module->addNeg(NEW_ID, a, a_inv, true);
        module->addMux(NEW_ID, a, a_inv, RTLIL::SigSpec(a, 3), y);

        module->fixup_ports();
    }
} Test1Pass;
```

```
$ yosys -m ./my_cmd.so -p 'test1' -Q

-- Running command `test1' --
Name of this module: absval
```

And if we look at the schematic for this new module we see the following:

Modifying modules

Most commands modify existing modules, not create new ones.

When modifying existing modules, stick to the following DOs and DON'Ts:

- Do not remove wires. Simply disconnect them and let a successive *clean* command worry about removing it.
- Use `module->fixup_ports()` after changing the `port_*` properties of wires.
- You can safely remove cells or change the `connections` property of a cell, but be careful when changing the size of the `SigSpec` connected to a cell port.
- Use the `SigMap` helper class (see next section) when you need a unique handle for each signal bit.

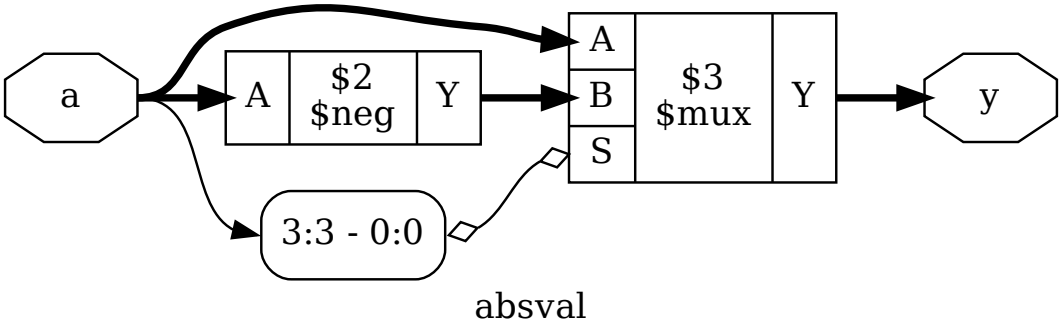

Fig. 4.6: Output of `yosys -m ./my_cmd.so -p 'test1; show'`

Using the SigMap helper class

Consider the following module:

Listing 4.4: `sigmap_test.v`

```
module test(input a, output x, y);
        assign x = a, y = a;
endmodule
```

In this case `a`, `x`, and `y` are all different names for the same signal. However:

Todo

use my_cmd.cc literalincludes

```
RTLIL::SigSpec a(module->wire("\\a")), x(module->wire("\\x")),
                                       y(module->wire("\\y"));
log("%d %d %d\n", a == x, x == y, y == a); // will print "0 0 0"
```

The `SigMap` helper class can be used to map all such aliasing signals to a unique signal from the group (usually the wire that is directly driven by a cell or port).

```
SigMap sigmap(module);
log("%d %d %d\n", sigmap(a) == sigmap(x), sigmap(x) == sigmap(y),
                  sigmap(y) == sigmap(a)); // will print "1 1 1"
```

Printing log messages

The `log()` function is a `printf()`-like function that can be used to create log messages.

Use `log_signal()` to create a C-string for a SigSpec object:

```
log("Mapped signal x: %s\n", log_signal(sigmap(x)));
```

The pointer returned by `log_signal()` is automatically freed by the log framework at a later time.

Use `log_id()` to create a C-string for an `RTLIL::IdString`:

```
log("Name of this module: %s\n", log_id(module->name));
```

Use `log_header()` and `log_push()`/`log_pop()` to structure log messages:

Todo

replace inline code

```
log_header(design, "Doing important stuff!\n");
log_push();
for (int i = 0; i < 10; i++)
    log("Log message #%d.\n", i);
log_pop();
```

Error handling

Use `log_error()` to report a non-recoverable error:

Todo

replace inline code

```
if (design->modules.count(module->name) != 0)
    log_error("A module with the name %s already exists!\n",
              RTLIL::id2cstr(module->name));
```

Use `log_cmd_error()` to report a recoverable error:

```
if (design->selection_stack.back().empty())
    log_cmd_error("This command can't operator on an empty selection!\n");
```

Use `log_assert()` and `log_abort()` instead of `assert()` and `abort()`.

The "stubnets" example module

The following is the complete code of the "stubnets" example module. It is included in the Yosys source distribution under `docs/source/code_examples/stubnets`.

Listing 4.5: `stubnets.cc`

```
1  // This is free and unencumbered software released into the public domain.
2  //
3  // Anyone is free to copy, modify, publish, use, compile, sell, or
4  // distribute this software, either in source code form or as a compiled
5  // binary, for any purpose, commercial or non-commercial, and by any
```

(continues on next page)

(continued from previous page)

```
// means.

#include "kernel/yosys.h"
#include "kernel/sigtools.h"

#include <string>
#include <map>
#include <set>

USING_YOSYS_NAMESPACE
PRIVATE_NAMESPACE_BEGIN

// this function is called for each module in the design
static void find_stub_nets(RTLIL::Design *design, RTLIL::Module *module, bool report_
↪bits)
{
        // use a SigMap to convert nets to a unique representation
        SigMap sigmap(module);

        // count how many times a single-bit signal is used
        std::map<RTLIL::SigBit, int> bit_usage_count;

        // count output lines for this module (needed only for summary output at the end)
        int line_count = 0;

        log("Looking for stub wires in module %s:\n", RTLIL::id2cstr(module->name));

        // For all ports on all cells
        for (auto &cell_iter : module->cells_)
        for (auto &conn : cell_iter.second->connections())
        {
                // Get the signals on the port
                // (use sigmap to get a unique signal name)
                RTLIL::SigSpec sig = sigmap(conn.second);

                // add each bit to bit_usage_count, unless it is a constant
                for (auto &bit : sig)
                        if (bit.wire != NULL)
                                bit_usage_count[bit]++;
        }

        // for each wire in the module
        for (auto &wire_iter : module->wires_)
        {
                RTLIL::Wire *wire = wire_iter.second;

                // .. but only selected wires
                if (!design->selected(module, wire))
                        continue;

                // add +1 usage if this wire actually is a port
                int usage_offset = wire->port_id > 0 ? 1 : 0;
```

(continues on next page)

(continued from previous page)

```
57
58                 // we will record which bits of the (possibly multi-bit) wire are stub␣
   ↪signals
59                 std::set<int> stub_bits;
60
61                 // get a signal description for this wire and split it into separate bits
62                 RTLIL::SigSpec sig = sigmap(wire);
63
64                 // for each bit (unless it is a constant):
65                 // check if it is used at least two times and add to stub_bits otherwise
66                 for (int i = 0; i < GetSize(sig); i++)
67                         if (sig[i].wire != NULL && (bit_usage_count[sig[i]] + usage_
   ↪offset) < 2)
68                                 stub_bits.insert(i);
69
70                 // continue if no stub bits found
71                 if (stub_bits.size() == 0)
72                         continue;
73
74                 // report stub bits and/or stub wires, don't report single bits
75                 // if called with report_bits set to false.
76                 if (GetSize(stub_bits) == GetSize(sig)) {
77                         log("  found stub wire: %s\n", RTLIL::id2cstr(wire->name));
78                 } else {
79                         if (!report_bits)
80                                 continue;
81                         log("  found wire with stub bits: %s [", RTLIL::id2cstr(wire->
   ↪name));
82                         for (int bit : stub_bits)
83                                 log("%s%d", bit == *stub_bits.begin() ? "" : ", ", bit);
84                         log("]\n");
85                 }
86
87                 // we have outputted a line, increment summary counter
88                 line_count++;
89         }
90
91         // report summary
92         if (report_bits)
93                 log("  found %d stub wires or wires with stub bits.\n", line_count);
94         else
95                 log("  found %d stub wires.\n", line_count);
96 }
97
98 // each pass contains a singleton object that is derived from Pass
99 struct StubnetsPass : public Pass {
100         StubnetsPass() : Pass("stubnets") { }
101         void execute(std::vector<std::string> args, RTLIL::Design *design) override
102         {
103                 // variables to mirror information from passed options
104                 bool report_bits = 0;
105
```

(continues on next page)

(continued from previous page)

```
                log_header(design, "Executing STUBNETS pass (find stub nets).\n");

                // parse options
                size_t argidx;
                for (argidx = 1; argidx < args.size(); argidx++) {
                        std::string arg = args[argidx];
                        if (arg == "-report_bits") {
                                report_bits = true;
                                continue;
                        }
                        break;
                }

                // handle extra options (e.g. selection)
                extra_args(args, argidx, design);

                // call find_stub_nets() for each module that is either
                // selected as a whole or contains selected objects.
                for (auto &it : design->modules_)
                        if (design->selected_module(it.first))
                                find_stub_nets(design, it.second, report_bits);
        }
} StubnetsPass;

PRIVATE_NAMESPACE_END
```

Listing 4.6: `Makefile`

```
.PHONY: all dots examples
all: dots examples
dots:
examples:

.PHONY: test
test: stubnets.so
        yosys -ql test1.log -m ./stubnets.so test.v -p "stubnets"
        yosys -ql test2.log -m ./stubnets.so test.v -p "opt; stubnets"
        yosys -ql test3.log -m ./stubnets.so test.v -p "techmap; opt; stubnets -report_
↪bits"
        tail test1.log test2.log test3.log

stubnets.so: stubnets.cc
        yosys-config --exec --cxx --cxxflags --ldflags -o $@ -shared $^ --ldlibs

.PHONY: clean
clean:
        rm -f test1.log test2.log test3.log
        rm -f stubnets.so stubnets.d
```

Listing 4.7: `test.v`

```
module uut(in1, in2, in3, out1, out2);

input [8:0] in1, in2, in3;
output [8:0] out1, out2;

assign out1 = in1 + in2 + (in3 >> 4);

endmodule
```

4.3.2 Compiling with Verific library

The easiest way to get Yosys with Verific support is to contact YosysHQ for a Tabby CAD Suite evaluation license and download link. The TabbyCAD Suite includes additional patches and a custom extensions library in order to get the most out of the Verific parser when using Yosys.

If you already have a license for the Verific parser, in either source or binary form, you may be able to compile Yosys with partial Verific support yourself.

The Yosys-Verific patch

YosysHQ maintains and develops a patch for Verific in order to better integrate with Yosys and to provide features required by some of the formal verification front-end tools. To license this patch for your own Yosys builds, contact YosysHQ.

Warning

While synthesis from RTL may be possible without this patch, YosysHQ provides no guarantees of correctness and is unable to provide support.

We recommend against using unpatched Yosys+Verific builds in conjunction with the formal verification front-end tools unless you are familiar with their inner workings. There are cases where the tools will appear to work, while producing incorrect results.

Note

Some of the formal verification front-end tools may not be fully supported without the full TabbyCAD suite. If you want to use these tools, including SBY, make sure to ask us if the Yosys-Verific patch is right for you.

Compile options

To enable Verific support `ENABLE_VERIFIC` has to be set to `1` and `VERIFIC_DIR` needs to point to the location where the library is located.

Parameter	Default	Description
ENABLE_VERIFIC	0	Enable compilation with Verific
VERIFIC_DIR	/usr/local/src/verific_lib	Library and headers location

Since there are multiple Verific library builds and they can have different features, there are compile options to select them.

Parameter	Default	Description
ENABLE_VERIFIC_SYSTEMVERILOG	1	SystemVerilog support
ENABLE_VERIFIC_VHDL	1	VHDL support
ENABLE_VERIFIC_HIER_TREE	1	Hierarchy tree support
ENABLE_VERIFIC_YOSYSHQ_EXTENSIONS	0	YosysHQ specific extensions support
ENABLE_VERIFIC_EDIF	0	EDIF support
ENABLE_VERIFIC_LIBERTY	0	Liberty file support

To find the compile options used for a given Yosys build, call `yosys-config --cxxflags`. This documentation was built with the following compile options:

```
   --cxxflags    -g -O2 -flto=auto -ffat-lto-objects \
                     -fstack-protector-strong -Wformat -Werror=format-security \
                     -Wall -Wextra -ggdb -I"/usr/share/yosys/include" -MD \
                     -MP -D_YOSYS_ -fPIC -I/usr/include -DYOSYS_VER=\"0.52\" \
                     -DYOSYS_MAJOR=0 -DYOSYS_MINOR=52 -DYOSYS_COMMIT=0.52 \
                     -std=c++17 -O3 -DYOSYS_ENABLE_READLINE \
                     -DYOSYS_ENABLE_PLUGINS -DYOSYS_ENABLE_GLOB \
                     -DYOSYS_ENABLE_ZLIB -I/usr/include/tcl8.6 \
                     -DYOSYS_ENABLE_TCL -DYOSYS_ENABLE_ABC -DYOSYS_ENABLE_COVER
```

Note

The YosysHQ specific extensions are only available with the TabbyCAD suite.

Required Verific features

The following features, along with their corresponding Yosys build parameters, are required for the Yosys-Verific patch:

- RTL elaboration with
  - SystemVerilog with `ENABLE_VERIFIC_SYSTEMVERILOG`, and/or
  - VHDL support with `ENABLE_VERIFIC_VHDL`.
- Hierarchy tree support and static elaboration with `ENABLE_VERIFIC_HIER_TREE`.

Please be aware that the following Verific configuration build parameter needs to be enabled in order to create the fully supported build:

```
database/DBCompileFlags.h:
    DB_PRESERVE_INITIAL_VALUE
```

Note

Yosys+Verific builds may compile without these features, but we provide no guarantees and cannot offer support if they are disabled or the Yosys-Verific patch is not used.

Optional Verific features

The following Verific features are available with TabbyCAD and can be enabled in Yosys builds:

- EDIF support with `ENABLE_VERIFIC_EDIF`, and
- Liberty file support with `ENABLE_VERIFIC_LIBERTY`.

Partially supported builds

This section describes Yosys+Verific configurations which we have confirmed as working in the past, however they are not a part of our regular tests so we cannot guarantee they are still functional.

To be able to compile Yosys with Verific, the Verific library must have support for at least one HDL language with RTL elaboration enabled. The following table lists a series of build configurations which are possible, but only provide a limited subset of features. Please note that support is limited without YosysHQ specific extensions of Verific library.

Configuration values:

a. `ENABLE_VERIFIC_SYSTEMVERILOG`

b. `ENABLE_VERIFIC_VHDL`

c. `ENABLE_VERIFIC_HIER_TREE`

d. `ENABLE_VERIFIC_YOSYSHQ_EXTENSIONS`

Features	Configuration values a	b	c	d
SystemVerilog + RTL elaboration	1	0	0	0
VHDL + RTL elaboration	0	1	0	0
SystemVerilog + VHDL + RTL elaboration	1	1	0	0
SystemVerilog + RTL elaboration + Static elaboration + Hier tree	1	0	1	0
VHDL + RTL elaboration + Static elaboration + Hier tree	0	1	1	0
SystemVerilog + VHDL + RTL elaboration + Static elaboration + Hier tree	1	1	1	0

Note

In case your Verific build has EDIF and/or Liberty support, you can enable those options. These are not mentioned above for simplification and since they are disabled by default.

4.3.3 Writing a new backend using FunctionalIR

What is FunctionalIR

To simplify the writing of backends for functional languages or similar targets, Yosys provides an alternative intermediate representation called FunctionalIR which maps more directly on those targets.

FunctionalIR represents the design as a function `(inputs, current_state) -> (outputs, next_state)`. This function is broken down into a series of assignments to variables. Each assignment is a simple operation, such as an addition. Complex operations are broken up into multiple steps. For example, an RTLIL addition will be translated into a sign/zero extension of the inputs, followed by an addition.

Like SSA form, each variable is assigned to exactly once. We can thus treat variables and assignments as equivalent and, since this is a graph-like representation, those variables are also called “nodes”. Unlike

RTLIL's cells and wires representation, this representation is strictly ordered (topologically sorted) with definitions preceding their use.

Every node has a "sort" (the FunctionalIR term for what might otherwise be called a "type"). The sorts available are

- `bit[n]` for an `n`-bit bitvector, and
- `memory[n,m]` for an immutable array of `2**n` values of sort `bit[m]`.

In terms of actual code, Yosys provides a class `Functional::IR` that represents a design in FunctionalIR. `Functional::IR::from_module` generates an instance from an RTLIL module. The entire design is stored as a whole in an internal data structure. To access the design, the `Functional::Node` class provides a reference to a particular node in the design. The `Functional::IR` class supports the syntax `for(auto node : ir)` to iterate over every node.

`Functional::IR` also keeps track of inputs, outputs and states. By a "state" we mean a pair of a "current state" input and a "next state" output. One such pair is created for every register and for every memory. Every input, output and state has a name (equal to their name in RTLIL), a sort and a kind. The kind field usually remains as the default value `$input`, `$output` or `$state`, however some RTLIL cells such as `$assert` or `$anyseq` generate auxiliary inputs/outputs/states that are given a different kind to distinguish them from ordinary RTLIL inputs/outputs/states.

- To access an individual input/output/state, use `ir.input(name, kind)`, `ir.output(name, kind)` or `ir.state(name, kind)`. `kind` defaults to the default kind.
- To iterate over all inputs/outputs/states of a certain kind, methods `ir.inputs`, `ir.outputs`, `ir.states` are provided. Their argument defaults to the default kinds mentioned.
- To iterate over inputs/outputs/states of any kind, use `ir.all_inputs`, `ir.all_outputs` and `ir.all_states`.
- Outputs have a node that indicate the value of the output, this can be retrieved via `output.value()`.
- States have a node that indicate the next value of the state, this can be retrieved via `state.next_value()`. They also have an initial value that is accessed as either `state.initial_value_signal()` or `state.initial_value_memory()`, depending on their sort.

Each node has a "function", which defines its operation (for a complete list of functions and a specification of their operation, see `functional.h`). Functions are represented as an enum `Functional::Fn` and the function field can be accessed as `node.fn()`. Since the most common operation is a switch over the function that also accesses the arguments, the `Node` class provides a method `visit` that implements the visitor pattern. For example, for an addition node `node` with arguments `n1` and `n2`, `node.visit(visitor)` would call `visitor.add(node, n1, n2)`. Thus typically one would implement a class with a method for every function. Visitors should inherit from either `Functional::AbstractVisitor<ReturnType>` or `Functional::DefaultVisitor<ReturnType>`. The former will produce a compiler error if a case is unhandled, the latter will call `default_handler(node)` instead. Visitor methods should be marked as `override` to provide compiler errors if the arguments are wrong.

Utility classes

`functional.h` also provides utility classes that are independent of the main FunctionalIR representation but are likely to be useful for backends.

`Functional::Writer` provides a simple formatting class that wraps a `std::ostream` and provides the following methods:

- `writer << value` wraps `os << value`.
- `writer.print(fmt, value0, value1, value2, ...)` replaces `{0}`, `{1}`, `{2}`, etc in the string `fmt` with `value0`, `value1`, `value2`, resp. Each value is formatted using `os << value`. It is also possible to

write {} to refer to one past the last index, i.e. {1} {} {} {7} {} is equivalent to {1} {2} {3} {7} {8}.

- writer.print_with(fn, fmt, value0, value1, value2, ...) functions much the same as print but it uses os << fn(value) to print each value and falls back to os << value if fn(value) is not legal.

Functional::Scope keeps track of variable names in a target language. It is used to translate between different sets of legal characters and to avoid accidentally re-defining identifiers. Users should derive a class from Scope and supply the following:

- Scope<Id> takes a template argument that specifies a type that's used to uniquely distinguish variables. Typically this would be int (if variables are used for Functional::IR nodes) or IdString.
- The derived class should provide a constructor that calls reserve for every reserved word in the target language.
- A method bool is_character_legal(char c, int index) has to be provided that returns true iff c is legal in an identifier at position index.

Given an instance scope of the derived class, the following methods are then available:

- scope.reserve(std::string name) marks the given name as being in-use
- scope.unique_name(IdString suggestion) generates a previously unused name and attempts to make it similar to suggestion.
- scope(Id id, IdString suggestion) functions similar to unique_name, except that multiple calls with the same id are guaranteed to retrieve the same name (independent of suggestion).

sexpr.h provides classes that represent and pretty-print s-expressions. S-expressions can be constructed with SExpr::list, for example SExpr expr = SExpr::list("add", "x", SExpr::list("mul", "y", "z")) represents (add x (mul y z)) (by adding using SExprUtil::list to the top of the file, list can be used as shorthand for SExpr::list). For prettyprinting, SExprWriter wraps an std::ostream and provides the following methods:

- writer << sexpr writes the provided expression to the output, breaking long lines and adding appropriate indentation.
- writer.open(sexpr) is similar to writer << sexpr but will omit the last closing parenthesis. Further arguments can then be added separately with << or open. This allows for printing large s-expressions without needing to construct the whole expression in memory first.
- writer.open(sexpr, false) is similar to writer.open(sexpr) but further arguments will not be indented. This is used to avoid unlimited indentation on structures with unlimited nesting.
- writer.close(n = 1) closes the last n open s-expressions.
- writer.push() and writer.pop() are used to automatically close s-expressions. writer.pop() closes all s-expressions opened since the last call to writer.push().
- writer.comment(string) writes a comment on a separate-line. writer.comment(string, true) appends a comment to the last printed s-expression.
- writer.flush() flushes any buffering and should be called before any direct access to the underlying std::ostream. It does not close unclosed parentheses.
- The destructor calls flush but also closes all unclosed parentheses.

Example: A minimal functional backend

At its most basic, there are three steps we need to accomplish for a minimal functional backend. First, we need to convert our design into FunctionalIR. This is most easily done by calling the `Functional::IR::from_module()` static method with our top-level module, or iterating over and converting each of the modules in our design. Second, we need to handle each of the `Functional::Node`s in our design. Iterating over the `Functional::IR` includes reading the module inputs and current state, but not writing the results. So our final step is to handle the outputs and next state.

In order to add an output command to Yosys, we implement the `Yosys::Backend` class and provide an instance of it:

Listing 4.8: Example source code for a minimal functional backend, `dummy.cc`

```
#include "kernel/functional.h"
#include "kernel/yosys.h"

USING_YOSYS_NAMESPACE
PRIVATE_NAMESPACE_BEGIN

struct FunctionalDummyBackend : public Backend {
        FunctionalDummyBackend() : Backend("functional_dummy", "dump generated␣
↪Functional IR") {}
        void execute(std::ostream *&f, std::string filename, std::vector<std::string>␣
↪args, RTLIL::Design *design) override
        {
                // backend pass boiler plate
                log_header(design, "Executing dummy functional backend.\n");

                size_t argidx = 1;
                extra_args(f, filename, args, argidx, design);

                for (auto module : design->selected_modules())
                {
                        log("Processing module `%s`.\n", module->name.c_str());

                        // convert module to FunctionalIR
                        auto ir = Functional::IR::from_module(module);
                        *f << "module " << module->name.c_str() << "\n";

                        // write node functions
                        for (auto node : ir)
                                *f << "  assign " << id2cstr(node.name())
                                   << " = " << node.to_string() << "\n";
                        *f << "\n";

                        // write outputs and next state
                        for (auto output : ir.outputs())
                                *f << " " << id2cstr(output->kind)
                                   << " " << id2cstr(output->name)
                                   << " = " << id2cstr(output->value().name()) << "\n";
                        for (auto state : ir.states())
                                *f << " " << id2cstr(state->kind)
```

(continues on next page)

(continued from previous page)

```
                                    << " " << id2cstr(state->name)
                                    << " = " << id2cstr(state->next_value().name()) << "\n
↪";
                }
        }
} FunctionalDummyBackend;

PRIVATE_NAMESPACE_END
```

Because we are using the `Backend` class, our `"functional_dummy"` is registered as the `write_functional_dummy` command. The `execute` method is the part that runs when the user calls the command, handling any options, preparing the output file for writing, and iterating over selected modules in the design. Since we don't have any options here, we set `argidx = 1` and call the `extra_args()` method. This method will read the command arguments, raising an error if there are any unexpected ones. It will also assign the pointer `f` to the output file, or stdout if none is given.

Note

For more on adding new commands to Yosys and how they work, refer to *Writing extensions*.

For this minimal example all we are doing is printing out each node. The `node.name()` method returns an `RTLIL::IdString`, which we convert for printing with `id2cstr()`. Then, to print the function of the node, we use `node.to_string()` which gives us a string of the form `function(args)`. The `function` part is the result of `Functional::IR::fn_to_string(node.fn())`; while `args` is the zero or more arguments passed to the function, most commonly the name of another node. Behind the scenes, the `node.to_string()` method actually wraps `node.visit(visitor)` with a private visitor whose return type is `std::string`.

Finally we iterate over the module's outputs and states, using `Functional::IROutput::value()` and `Functional::IRState::next_value()` respectively in order to get the results of the transfer function.

Example: Adapting SMT-LIB backend for Rosette

This section will introduce the SMT-LIB functional backend (*write_functional_smt2*) and what changes are needed to work with another s-expression target, Rosette (*write_functional_rosette*).

Overview

> Rosette is a solver-aided programming language that extends Racket with language constructs for program synthesis, verification, and more. To verify or synthesize code, Rosette compiles it to logical constraints solved with off-the-shelf SMT solvers.
>
> —https://emina.github.io/rosette/

Rosette, being backed by SMT solvers and written with s-expressions, uses code very similar to the *write_functional_smt2* output. As a result, the SMT-LIB functional backend can be used as a starting point for implementing a Rosette backend.

Full code listings for the initial SMT-LIB backend and the converted Rosette backend are included in the Yosys source repository under `backends/functional` as `smtlib.cc` and `smtlib_rosette.cc` respectively. Note that the Rosette language is an extension of the Racket language; this guide tends to refer to Racket when talking about the underlying semantics/syntax of the language.

The major changes from the SMT-LIB backend are as follows:

- all of the `Smt` prefixes in names are replaced with `Smtr` to mean `smtlib_rosette`;

- syntax is adjusted for Racket;
- data structures for input/output/state are changed from using `declare-datatype` with statically typed fields, to using `struct` with no static typing;
- the transfer function also loses its static typing;
- sign/zero extension in Rosette use the output width instead of the number of extra bits, gaining static typing;
- the single scope is traded for a global scope with local scope for each struct;
- initial state is provided as a constant value instead of a set of assertions;
- and the `-provides` option is introduced to more easily use generated code within Rosette based applications.

Scope

Our first addition to the *minimal backend* above is that for both SMT-LIB and Rosette backends, we are now targetting real languages which bring with them their own sets of constraints with what we can use as identifiers. This is where the `Functional::Scope` class described above comes in; by using this class we can safely rename our identifiers in the generated output without worrying about collisions or illegal names/characters.

In the SMT-LIB version, the `SmtScope` class implements `Scope<int>`; provides a constructor that iterates over a list of reserved keywords, calling `reserve` on each; and defines the `is_character_legal` method to reject any characters which are not allowed in SMT-LIB variable names to then be replaced with underscores in the output. To use this scope we create an instance of it, and call the `Scope::unique_name()` method to generate a unique and legal name for each of our identifiers.

In the Rosette version we update the list of legal ascii characters in the `is_character_legal` method to only those allowed in Racket variable names.

Listing 4.9: diff of `Scope` class

```
-struct SmtScope : public Functional::Scope<int> {
-       SmtScope() {
+struct SmtrScope : public Functional::Scope<int> {
+       SmtrScope() {
                for(const char **p = reserved_keywords; *p != nullptr; p++)
                        reserve(*p);
        }
        bool is_character_legal(char c, int index) override {
-               return isascii(c) && (isalpha(c) || (isdigit(c) && index > 0) || strchr(
↪"~!@$%^&*_-+=<>.?/", c));
+               return isascii(c) && (isalpha(c) || (isdigit(c) && index > 0) || strchr(
↪"@$%^&_+=.", c));
        }
 };
```

For the reserved keywords we trade the SMT-LIB specification for Racket to prevent parts of our design from accidentally being treated as Racket code. We also no longer need to reserve `pair`, `first`, and `second`. In *write_functional_smt2* these are used for combining the `(inputs, current_state)` and `(outputs, next_state)` into a single variable. Racket provides this functionality natively with `cons`, which we will see later.

Listing 4.10: diff of `reserved_keywords` list

```
 const char *reserved_keywords[] = {
-  // reserved keywords from the smtlib spec
-  ...
+  // reserved keywords from the racket spec
+  ...

   // reserved for our own purposes
-  "pair", "Pair", "first", "second",
-  "inputs", "state",
+  "inputs", "state", "name",
   nullptr
 };
```

Note

We skip over the actual list of reserved keywords from both the smtlib and racket specifications to save on space in this document.

Sort

Next up in *write_functional_smt2* we see the `Sort` class. This is a wrapper for the `Functional::Sort` class, providing the additional functionality of mapping variable declarations to s-expressions with the `to_sexpr()` method. The main change from `SmtSort` to `SmtrSort` is a syntactical one with signals represented as `bitvectors`, and memories as `lists` of signals.

Listing 4.11: diff of `Sort` wrapper

```
         SExpr to_sexpr() const {
                 if(sort.is_memory()) {
-                        return list("Array", list("_", "BitVec", sort.addr_width()),␣
↪list("_", "BitVec", sort.data_width()));
+                        return list("list", list("bitvector", sort.addr_width()), list(
↪"bitvector", sort.data_width()));
                 } else if(sort.is_signal()) {
-                        return list("_", "BitVec", sort.width());
+                        return list("bitvector", sort.width());
                 } else {
                         log_error("unknown sort");
                 }
         }
```

Struct

As we saw in the *minimal backend* above, the `Functional::IR` class tracks the set of inputs, the set of outputs, and the set of "state" variables. The SMT-LIB backend maps each of these sets into its own `SmtStruct`, with each variable getting a corresponding field in the struct and a specified *Sort*. *write_functional_smt2* then defines each of these structs as a new `datatype`, with each element being strongly-typed.

In Rosette, rather than defining new datatypes for our structs, we use the native `struct`. We also only declare each field by name because Racket provides less static typing. For ease of use, we provide the

expected type for each field as comments.

Listing 4.12: diff of `write_definition` method

```
        void write_definition(SExprWriter &w) {
-               w.open(list("declare-datatype", name));
-               w.open(list());
-               w.open(list(name));
-               for(const auto &field : fields)
-                       w << list(field.accessor, field.sort.to_sexpr());
-               w.close(3);
+               vector<SExpr> field_list;
+               for(const auto &field : fields) {
+                       field_list.emplace_back(field.name);
+               }
+               w.push();
+               w.open(list("struct", name, field_list, "#:transparent"));
+               if (field_names.size()) {
+                       for (const auto &field : fields) {
+                               auto bv_type = field.sort.to_sexpr();
+                               w.comment(field.name + " " + bv_type.to_string());
+                       }
+               }
+               w.pop();
        }
```

Each field is added to the `SmtStruct` with the `insert` method, which also reserves a unique name (or accessor) within the *Scope*. These accessors combine the struct name and field name and are globally unique, being used in the `access` method for reading values from the input/current state.

Listing 4.13: `Struct::access()` method

```
       SExpr access(SExpr record, IdString name) {
               size_t i = field_names.at(name);
               return list(fields[i].accessor, std::move(record));
       }
```

In Rosette, struct fields are accessed as `<struct_name>-<field_name>` so including the struct name in the field name would be redundant. For *write_functional_rosette* we instead choose to make field names unique only within the struct, while accessors are unique across the whole module. We thus modify the class constructor and `insert` method to support this; providing one scope that is local to the struct (`local_scope`) and one which is shared across the whole module (`global_scope`), leaving the `access` method unchanged.

Listing 4.14: diff of struct constructor

```
-       SmtStruct(std::string name, SmtScope &scope) : scope(scope), name(name) {}
-       void insert(IdString field_name, SmtSort sort) {
+       SmtrStruct(std::string name, SmtrScope &scope) : global_scope(scope), local_
↪scope(), name(name) {}
+       void insert(IdString field_name, SmtrSort sort) {
                field_names(field_name);
-               auto accessor = scope.unique_name("\\" + name + "_" + RTLIL::unescape_
↪id(field_name));
-               fields.emplace_back(Field{sort, accessor});
```

(continues on next page)

(continued from previous page)

```
+                auto base_name = local_scope.unique_name(field_name);
+                auto accessor = name + "-" + base_name;
+                global_scope.reserve(accessor);
+                fields.emplace_back(Field{sort, accessor, base_name});
        }
```

Finally, `SmtStruct` also provides a `write_value` template method which calls a provided function on each element in the struct. This is used later for assigning values to the output/next state pair. The only change here is to remove the check for zero-argument constructors since this is not necessary with Rosette `structs`.

Listing 4.15: diff of `write_value` method

```
        template<typename Fn> void write_value(SExprWriter &w, Fn fn) {
-               if(field_names.empty()) {
-                       // Zero-argument constructors in SMTLIB must not be called as␣
↪functions.
-                       w << name;
-               } else {
-                       w.open(list(name));
-                       for(auto field_name : field_names) {
-                               w << fn(field_name);
-                               w.comment(RTLIL::unescape_id(field_name), true);
-                       }
-                       w.close();
+               w.open(list(name));
+               for(auto field_name : field_names) {
+                       w << fn(field_name);
+                       w.comment(RTLIL::unescape_id(field_name), true);
                }
+               w.close();
        }
```

PrintVisitor

Remember in the *minimal backend* we converted nodes into strings for writing using the `node.to_string()` method, which wrapped `node.visit()` with a private visitor. We now want a custom visitor which can convert nodes into s-expressions. This is where the `PrintVisitor` comes in, implementing the abstract `Functional::AbstractVisitor` class with a return type of `SExpr`. For most functions, the Rosette output is very similar to the corresponding SMT-LIB function with minor adjustments for syntax.

Listing 4.16: portion of `Functional::AbstractVisitor` implementation diff showing similarities

```
        SExpr logical_shift_left(Node, Node a, Node b) override { return list("bvshl",␣
↪n(a), extend(n(b), b.width(), a.width())); }
        SExpr logical_shift_right(Node, Node a, Node b) override { return list("bvlshr",
↪ n(a), extend(n(b), b.width(), a.width())); }
        SExpr arithmetic_shift_right(Node, Node a, Node b) override { return list(
↪"bvashr", n(a), extend(n(b), b.width(), a.width())); }
-       SExpr mux(Node, Node a, Node b, Node s) override { return list("ite", to_
↪bool(n(s)), n(b), n(a)); }
-       SExpr constant(Node, RTLIL::Const const &value) override { return smt_
```

(continues on next page)

(continued from previous page)

```
↪const(value); }
-       SExpr memory_read(Node, Node mem, Node addr) override { return list("select",␣
↪n(mem), n(addr)); }
-       SExpr memory_write(Node, Node mem, Node addr, Node data) override { return list(
↪"store", n(mem), n(addr), n(data)); }
+       SExpr mux(Node, Node a, Node b, Node s) override { return list("if", to_
↪bool(n(s)), n(b), n(a)); }
+       SExpr constant(Node, RTLIL::Const const& value) override { return list("bv",␣
↪smt_const(value), value.size()); }
+       SExpr memory_read(Node, Node mem, Node addr) override { return list("list-ref-bv
↪", n(mem), n(addr)); }
+       SExpr memory_write(Node, Node mem, Node addr, Node data) override { return list(
↪"list-set-bv", n(mem), n(addr), n(data)); }
```

However there are some differences in the two formats with regards to how booleans are handled, with Rosette providing built-in functions for conversion.

Listing 4.17: portion of `Functional::AbstractVisitor` implementation diff showing differences

```
        SExpr from_bool(SExpr &&arg) {
-               return list("ite", std::move(arg), "#b1", "#b0");
+               return list("bool->bitvector", std::move(arg));
        }
        SExpr to_bool(SExpr &&arg) {
-               return list("=", std::move(arg), "#b1");
+               return list("bitvector->bool", std::move(arg));
        }
```

Of note here is the rare instance of the Rosette implementation *gaining* static typing rather than losing it. Where SMT_LIB calls zero/sign extension with the number of extra bits needed (given by `out_width - a.width()`), Rosette instead specifies the type of the output (given by `list("bitvector", out_width)`).

Listing 4.18: zero/sign extension implementation diff

```
-       SExpr zero_extend(Node, Node a, int out_width) override { return list(list("_",
↪"zero_extend", out_width - a.width()), n(a)); }
-       SExpr sign_extend(Node, Node a, int out_width) override { return list(list("_",
↪"sign_extend", out_width - a.width()), n(a)); }
+       SExpr zero_extend(Node, Node a, int out_width) override { return list("zero-
↪extend", n(a), list("bitvector", out_width)); }
+       SExpr sign_extend(Node, Node a, int out_width) override { return list("sign-
↪extend", n(a), list("bitvector", out_width)); }
```

Note

Be sure to check the source code for the full list of differences here.

Module

With most of the supporting classes out of the way, we now reach our three main steps from the *minimal backend*. These are all handled by the `SmtModule` class, with the mapping from RTLIL module to FunctionalIR happening in the constructor. Each of the three `SmtStructs`; inputs, outputs, and state; are also created in the constructor, with each value in the corresponding lists in the IR being `inserted`.

Listing 4.19: `SmtModule` constructor

```
        SmtModule(Module *module)
                : ir(Functional::IR::from_module(module))
                , scope()
                , name(scope.unique_name(module->name))
                , input_struct(scope.unique_name(module->name.str() + "_Inputs"), scope)
                , output_struct(scope.unique_name(module->name.str() + "_Outputs"),␣
↪scope)
                , state_struct(scope.unique_name(module->name.str() + "_State"), scope)
        {
                scope.reserve(name + "-initial");
                for (auto input : ir.inputs())
                        input_struct.insert(input->name, input->sort);
                for (auto output : ir.outputs())
                        output_struct.insert(output->name, output->sort);
                for (auto state : ir.states())
                        state_struct.insert(state->name, state->sort);
        }
```

Since Racket uses the `-` to access struct fields, the `SmtrModule` instead uses an underscore for the name of the initial state.

Listing 4.20: diff of `Module` constructor

```
-               scope.reserve(name + "-initial");
+               scope.reserve(name + "_initial");
```

The `write` method is then responsible for writing the FunctionalIR to the output file, formatted for the corresponding backend. `SmtModule::write()` breaks the output file down into four parts: defining the three structs, declaring the `pair` datatype, defining the transfer function `(inputs, current_state) ->`

(outputs, next_state) with write_eval, and declaring the initial state with write_initial. The only change for the SmtrModule is that the pair declaration isn't needed.

Listing 4.21: diff of Module::write() method

```
        void write(std::ostream &out)
        {
                SExprWriter w(out);

                input_struct.write_definition(w);
                output_struct.write_definition(w);
                state_struct.write_definition(w);

-               w << list("declare-datatypes",
-                       list(list("Pair", 2)),
-                       list(list("par", list("X", "Y"), list(list("pair", list("first",
↪ "X"), list("second", "Y"))))));
-
                write_eval(w);
                write_initial(w);
        }
```

The write_eval method is where the FunctionalIR nodes, outputs, and next state are handled. Just as with the *minimal backend*, we iterate over the nodes with for(auto n : ir), and then use the Struct::write_value() method for the output_struct and state_struct to iterate over the outputs and next state respectively.

Listing 4.22: iterating over FunctionalIR nodes in SmtModule::write_eval()

```
               for(auto n : ir)
                       if(!inlined(n)) {
                               w.open(list("let", list(list(node_to_sexpr(n), n.
↪visit(visitor)))), false);
                               w.comment(SmtSort(n.sort()).to_sexpr().to_string(),␣
↪true);
                       }
```

The main differences between our two backends here are syntactical. First we change the define-fun for the Racket style define which drops the explicitly typed inputs/outputs. And then we change the final result from a pair to the native cons which acts in much the same way, returning both the outputs and the next_state in a single variable.

Listing 4.23: diff of Module::write_eval() transfer function declaration

```
-               w.open(list("define-fun", name,
-                       list(list("inputs", input_struct.name),
-                            list("state", state_struct.name)),
-                       list("Pair", output_struct.name, state_struct.name)));
+               w.open(list("define", list(name, "inputs", "state")));
```

Listing 4.24: diff of output/next state handling `Module::write_eval()`

```
-                 w.open(list("pair"));
+                 w.open(list("cons"));
                  output_struct.write_value(w, [&](IdString name) { return node_to_
↪sexpr(ir.output(name).value()); });
                  state_struct.write_value(w, [&](IdString name) { return node_to_
↪sexpr(ir.state(name).next_value()); });
                  w.pop();
```

For the `write_initial` method, the SMT-LIB backend uses `declare-const` and `asserts` which must always hold true. For Rosette we instead define the initial state as any other variable that can be used by external code. This variable, `[name]_initial`, can then be used in the `[name]` function call; allowing the Rosette code to be used in the generation of the `next_state`, whereas the SMT-LIB code can only verify that a given `next_state` is correct.

Listing 4.25: diff of `Module::write_initial()` method

```
         void write_initial(SExprWriter &w)
         {
-                 std::string initial = name + "-initial";
-                 w << list("declare-const", initial, state_struct.name);
+                 w.push();
+                 auto initial = name + "_initial";
+                 w.open(list("define", initial));
+                 w.open(list(state_struct.name));
                  for (auto state : ir.states()) {
-                         if(state->sort.is_signal())
-                                 w << list("assert", list("=", state_struct.
↪access(initial, state->name), smt_const(state->initial_value_signal())));
-                         else if(state->sort.is_memory()) {
+                         if (state->sort.is_signal())
+                                 w << list("bv", smt_const(state->initial_value_
↪signal()), state->sort.width());
+                         else if (state->sort.is_memory()) {
                                  const auto &contents = state->initial_value_memory();
+                                 w.open(list("list"));
                                  for(int i = 0; i < 1<<state->sort.addr_width(); i++) {
-                                         auto addr = smt_const(RTLIL::Const(i, state->
↪sort.addr_width()));
-                                         w << list("assert", list("=", list("select",␣
↪state_struct.access(initial, state->name), addr), smt_const(contents[i])));
+                                         w << list("bv", smt_const(contents[i]), state->
↪sort.data_width());
                                  }
+                                 w.close();
                          }
                  }
+                 w.pop();
         }
```

Backend

The final part is the `Backend` itself, with much of the same boiler plate as the *minimal backend*. The main difference is that we use the *Module* to perform the actual processing.

Listing 4.26: The `FunctionalSmtBackend`

```
struct FunctionalSmtBackend : public Backend {
        FunctionalSmtBackend() : Backend("functional_smt2", "Generate SMT-LIB from␣
↪Functional IR") {}

        void help() override { log("\nFunctional SMT Backend.\n\n"); }

        void execute(std::ostream *&f, std::string filename, std::vector<std::string>␣
↪args, RTLIL::Design *design) override
        {
                log_header(design, "Executing Functional SMT Backend.\n");

                size_t argidx = 1;
                extra_args(f, filename, args, argidx, design);

                for (auto module : design->selected_modules()) {
                        log("Processing module `%s`.\n", module->name.c_str());
                        SmtModule smt(module);
                        smt.write(*f);
                }
        }
} FunctionalSmtBackend;
```

There are two additions here for Rosette. The first is that the output file needs to start with the `#lang` definition which tells the compiler/interpreter that we want to use the Rosette language module. The second is that the *write_functional_rosette* command takes an optional argument, `-provides`. If this argument is given, then the output file gets an additional line declaring that everything in the file should be exported for use; allowing the file to be treated as a Racket package with structs and mapping function available for use externally.

Listing 4.27: relevant portion of diff of `Backend::execute()` method

```
+                *f << "#lang rosette/safe\n";
+                if (provides) {
+                        *f << "(provide (all-defined-out))\n";
+                }
```

4.3.4 Contributing to Yosys

> **Note**
>
> For information on making a pull request on github, refer to our `CONTRIBUTING.md` file.

Coding Style

Formatting of code

- Yosys code is using tabs for indentation. Tabs are 8 characters.
- A continuation of a statement in the following line is indented by two additional tabs.
- Lines are as long as you want them to be. A good rule of thumb is to break lines at about column 150.
- Opening braces can be put on the same or next line as the statement opening the block (if, switch, for, while, do). Put the opening brace on its own line for larger blocks, especially blocks that contains blank lines.
- Otherwise stick to the Linux Kernel Coding Style.

C++ Language

Yosys is written in C++17.

In general Yosys uses `int` instead of `size_t`. To avoid compiler warnings for implicit type casts, always use `GetSize(foobar)` instead of `foobar.size()`. (`GetSize()` is defined in `kernel/yosys.h`)

Use range-based for loops whenever applicable.

4.3.5 Testing Yosys

Todo

more about the included test suite and how to add tests

Automatic testing

The Yosys Git repo has automatic testing of builds and running of the included test suite on both Ubuntu and macOS, as well as across range of compiler versions. For up to date information, including OS versions, refer to the git actions page.

Todo

are unit tests currently working

4.4 Techmap by example

As a quick recap, the *techmap* command replaces cells in the design with implementations given as Verilog code (called "map files"). It can replace Yosys' internal cell types (such as *$or*) as well as user-defined cell types.

- Verilog parameters are used extensively to customize the internal cell types.
- Additional special parameters are used by techmap to communicate meta-data to the map files.
- Special wires are used to instruct techmap how to handle a module in the map file.
- Generate blocks and recursion are powerful tools for writing map files.

Code examples used in this document are included in the Yosys code base under `docs/source/code_examples/techmap`.

4.4.1 Mapping OR3X1

Todo

add/expand supporting text

Note

This is a simple example for demonstration only. Techmap shouldn't be used to implement basic logic optimization.

Listing 4.28: `red_or3x1_map.v`

```
module \$reduce_or (A, Y);

    parameter A_SIGNED = 0;
    parameter A_WIDTH = 0;
    parameter Y_WIDTH = 0;

    input [A_WIDTH-1:0] A;
    output [Y_WIDTH-1:0] Y;

    function integer min;
        input integer a, b;
        begin
            if (a < b)
                min = a;
            else
                min = b;
        end
    endfunction

    genvar i;
    generate begin
        if (A_WIDTH == 0) begin
            assign Y = 0;
        end
        if (A_WIDTH == 1) begin
            assign Y = A;
        end
        if (A_WIDTH == 2) begin
            wire ybuf;
            OR3X1 g (.A(A[0]), .B(A[1]), .C(1'b0), .Y(ybuf));
            assign Y = ybuf;
        end
        if (A_WIDTH == 3) begin
            wire ybuf;
            OR3X1 g (.A(A[0]), .B(A[1]), .C(A[2]), .Y(ybuf));
            assign Y = ybuf;
        end
```

(continues on next page)

(continued from previous page)

```
        if (A_WIDTH > 3) begin
            localparam next_stage_sz = (A_WIDTH+2) / 3;
            wire [next_stage_sz-1:0] next_stage;
            for (i = 0; i < next_stage_sz; i = i+1) begin
                localparam bits = min(A_WIDTH - 3*i, 3);
                assign next_stage[i] = |A[3*i +: bits];
            end
            assign Y = |next_stage;
        end
    end endgenerate
endmodule
```

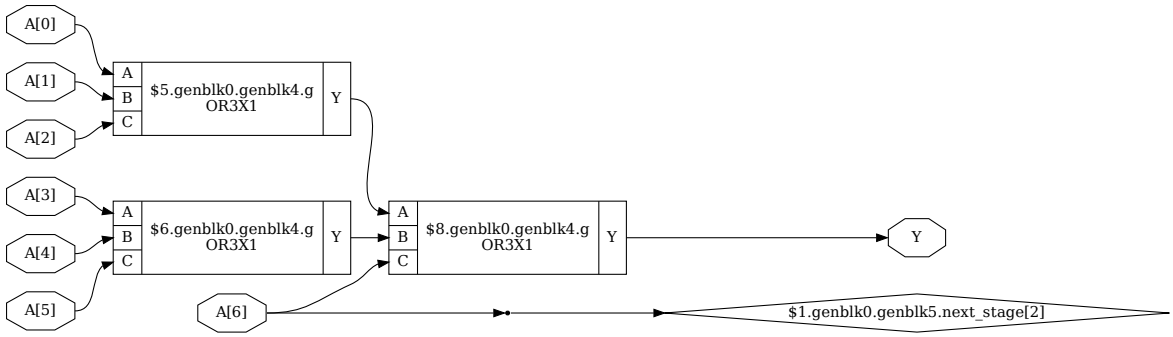

Listing 4.29: `red_or3x1_test.ys`

```
read_verilog red_or3x1_test.v
hierarchy -check -top test

techmap -map red_or3x1_map.v;;

splitnets -ports
show -prefix red_or3x1 -format dot -notitle -lib red_or3x1_cells.v
```

Listing 4.30: `red_or3x1_test.v`

```
module test (A, Y);
    input [6:0] A;
    output Y;
    assign Y = |A;
endmodule
```

4.4.2 Conditional techmap

- In some cases only cells with certain properties should be substituted.
- The special wire `_TECHMAP_FAIL_` can be used to disable a module in the map file for a certain set of parameters.
- The wire `_TECHMAP_FAIL_` must be set to a constant value. If it is non-zero then the module is disabled for this set of parameters.

- Example use-cases:
  - coarse-grain cell types that only operate on certain bit widths
  - memory resources for different memory geometries (width, depth, ports, etc.)

Example:

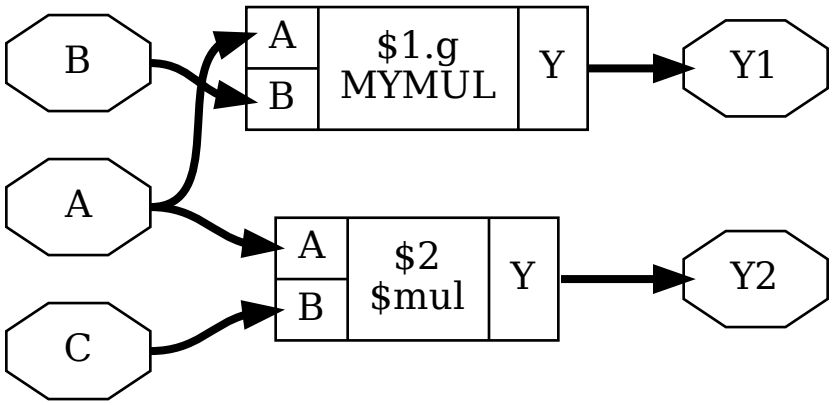

Listing 4.31: `sym_mul_map.v`

```
module \$mul (A, B, Y);
    parameter A_SIGNED = 0;
    parameter B_SIGNED = 0;
    parameter A_WIDTH = 1;
    parameter B_WIDTH = 1;
    parameter Y_WIDTH = 1;

    input [A_WIDTH-1:0] A;
    input [B_WIDTH-1:0] B;
    output [Y_WIDTH-1:0] Y;

    wire _TECHMAP_FAIL_ = A_WIDTH != B_WIDTH || B_WIDTH != Y_WIDTH;

    MYMUL #( .WIDTH(Y_WIDTH) ) g ( .A(A), .B(B), .Y(Y) );
endmodule
```

Listing 4.32: `sym_mul_test.v`

```
module test(A, B, C, Y1, Y2);
    input   [7:0] A, B, C;
    output  [7:0] Y1 = A * B;
    output [15:0] Y2 = A * C;
endmodule
```

Listing 4.33: `sym_mul_test.ys`

```
read_verilog sym_mul_test.v
hierarchy -check -top test

techmap -map sym_mul_map.v;;

show -prefix sym_mul -format dot -notitle -lib sym_mul_cells.v
```

4.4.3 Scripting in map modules

- The special wires `_TECHMAP_DO_*` can be used to run Yosys scripts in the context of the replacement module.
- The wire that comes first in alphabetical oder is interpreted as string (must be connected to constants) that is executed as script. Then the wire is removed. Repeat.
- You can even call techmap recursively!
- Example use-cases:
  - Using always blocks in map module: call *proc*
  - Perform expensive optimizations (such as *freduce*) on cells where this is known to work well.
  - Interacting with custom commands.

Note

PROTIP:

Commands such as *shell*, `show -pause`, and *dump* can be used in the `_TECHMAP_DO_*` scripts for debugging map modules.

Example:

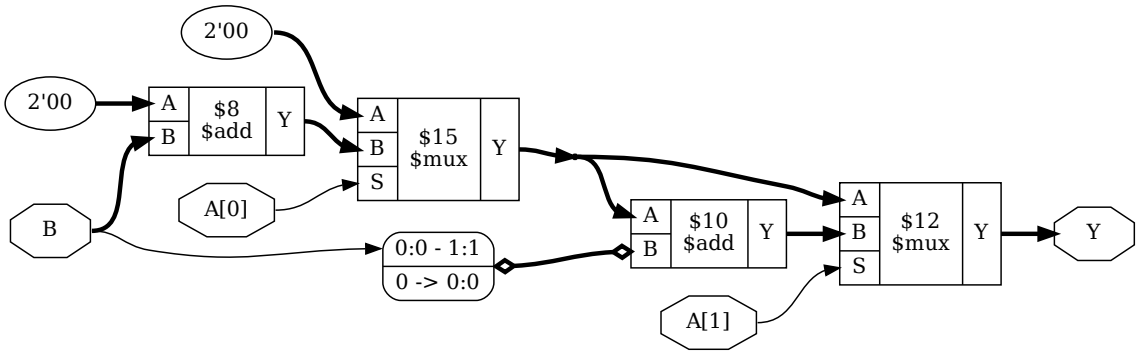

Listing 4.34: mymul_map.v

```
module MYMUL(A, B, Y);
    parameter WIDTH = 1;
    input [WIDTH-1:0] A, B;
    output reg [WIDTH-1:0] Y;

    wire [1023:0] _TECHMAP_DO_ = "proc; clean";

    integer i;
    always @* begin
        Y = 0;
        for (i = 0; i < WIDTH; i=i+1)
            if (A[i])
                Y = Y + (B << i);
    end
endmodule
```

Listing 4.35: mymul_test.v

```
module test(A, B, Y);
    input  [1:0] A, B;
    output [1:0] Y = A * B;
endmodule
```

Listing 4.36: mymul_test.ys

```
read_verilog mymul_test.v
hierarchy -check -top test

techmap -map sym_mul_map.v \
        -map mymul_map.v;;

rename test test_mapped
read_verilog mymul_test.v
miter -equiv test test_mapped miter
flatten miter

sat -verify -prove trigger 0 miter

splitnets -ports test_mapped/A
show -prefix mymul -format dot -notitle test_mapped
```

4.4.4 Handling constant inputs

- The special parameters _TECHMAP_CONSTMSK_<port-name>_ and _TECHMAP_CONSTVAL_<port-name>_ can be used to handle constant input values to cells.
- The former contains 1-bits for all constant input bits on the port.
- The latter contains the constant bits or undef (x) for non-constant bits.
- Example use-cases:
  - Converting arithmetic (for example multiply to shift).

– Identify constant addresses or enable bits in memory interfaces.

Example:

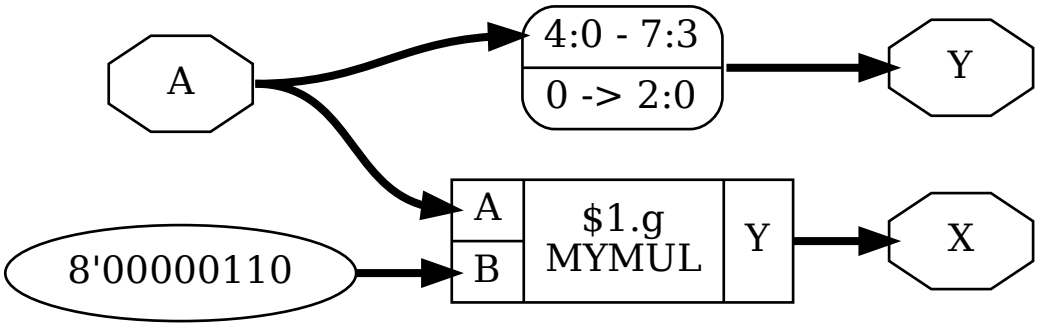

Listing 4.37: `mulshift_map.v`

```
module MYMUL(A, B, Y);
    parameter WIDTH = 1;
    input [WIDTH-1:0] A, B;
    output reg [WIDTH-1:0] Y;

    parameter _TECHMAP_CONSTVAL_A_ = WIDTH'bx;
    parameter _TECHMAP_CONSTVAL_B_ = WIDTH'bx;

    reg _TECHMAP_FAIL_;
    wire [1023:0] _TECHMAP_DO_ = "proc; clean";

    integer i;
    always @* begin
            _TECHMAP_FAIL_ <= 1;
        for (i = 0; i < WIDTH; i=i+1) begin
            if (_TECHMAP_CONSTVAL_A_ === WIDTH'd1 << i) begin
                _TECHMAP_FAIL_ <= 0;
                Y <= B << i;
            end
            if (_TECHMAP_CONSTVAL_B_ === WIDTH'd1 << i) begin
                _TECHMAP_FAIL_ <= 0;
                Y <= A << i;
            end
        end
    end
endmodule
```

Listing 4.38: `mulshift_test.v`

```
module test (A, X, Y);
input [7:0] A;
output [7:0] X = A * 8'd 6;
output [7:0] Y = A * 8'd 8;
endmodule
```

Listing 4.39: `mulshift_test.ys`

```
read_verilog mulshift_test.v
hierarchy -check -top test

techmap -map sym_mul_map.v \
        -map mulshift_map.v;;

show -prefix mulshift -format dot -notitle -lib sym_mul_cells.v
```

4.4.5 Handling shorted inputs

- The special parameters `_TECHMAP_BITS_CONNMAP_` and `_TECHMAP_CONNMAP_<port-name>_` can be used to handle shorted inputs.
- Each bit of the port correlates to an `_TECHMAP_BITS_CONNMAP_` bits wide number in `_TECHMAP_CONNMAP_<port-name>_`.
- Each unique signal bit is assigned its own number. Identical fields in the `_TECHMAP_CONNMAP_<port-name>_` parameters mean shorted signal bits.
- The numbers 0-3 are reserved for `0`, `1`, `x`, and `z` respectively.
- Example use-cases:
  - Detecting shared clock or control signals in memory interfaces.
  - In some cases this can be used for for optimization.

Example:

Listing 4.40: `addshift_map.v`

```
module \$add (A, B, Y);
  parameter A_SIGNED = 0;
  parameter B_SIGNED = 0;
  parameter A_WIDTH = 1;
  parameter B_WIDTH = 1;
  parameter Y_WIDTH = 1;

  input [A_WIDTH-1:0] A;
  input [B_WIDTH-1:0] B;
  output [Y_WIDTH-1:0] Y;

  parameter _TECHMAP_BITS_CONNMAP_ = 0;
  parameter _TECHMAP_CONNMAP_A_ = 0;
  parameter _TECHMAP_CONNMAP_B_ = 0;
```

(continues on next page)

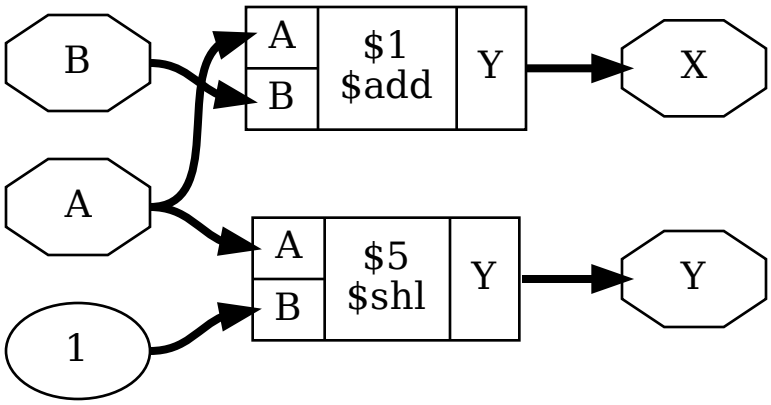

(continued from previous page)

```
  wire _TECHMAP_FAIL_ = A_WIDTH != B_WIDTH || B_WIDTH < Y_WIDTH ||
                        _TECHMAP_CONNMAP_A_ != _TECHMAP_CONNMAP_B_;

  assign Y = A << 1;
endmodule
```

Listing 4.41: `addshift_test.v`

```
module test (A, B, X, Y);
input [7:0] A, B;
output [7:0] X = A + B;
output [7:0] Y = A + A;
endmodule
```

Listing 4.42: `addshift_test.ys`

```
read_verilog addshift_test.v
hierarchy -check -top test

techmap -map addshift_map.v;;

show -prefix addshift -format dot -notitle
```

4.4.6 Notes on using techmap

- Don't use positional cell parameters in map modules.
- You can use the `$__`-prefix for internal cell types to avoid collisions with the user-namespace. But always use two underscores or the internal consistency checker will trigger on these cells.
- Techmap has two major use cases:
  - Creating good logic-level representation of arithmetic functions. This also means using dedicated

hardware resources such as half- and full-adder cells in ASICS or dedicated carry logic in FPGAs.

– Mapping of coarse-grain resources such as block memory or DSP cells.

4.5 Notes on Verilog support in Yosys

Todo

how much of this is specific to the read_verilog and should be in *The Verilog and AST frontends*?

4.5.1 Unsupported Verilog-2005 Features

The following Verilog-2005 features are not supported by Yosys and there are currently no plans to add support for them:

- **Non-synthesizable language features as defined in**
  IEC 62142(E):2005 / IEEE Std. 1364.1(E):2002
- The `tri`, `triand` and `trior` net types
- The `config` and `disable` keywords and library map files

4.5.2 Verilog Attributes and non-standard features

- The `full_case` attribute on case statements is supported (also the non-standard `// synopsys full_case` directive)
- The `parallel_case` attribute on case statements is supported (also the non-standard `// synopsys parallel_case` directive)
- The `// synopsys translate_off` and `// synopsys translate_on` directives are also supported (but the use of `` `ifdef .. `endif `` is strongly recommended instead).
- The `nomem2reg` attribute on modules or arrays prohibits the automatic early conversion of arrays to separate registers. This is potentially dangerous. Usually the front-end has good reasons for converting an array to a list of registers. Prohibiting this step will likely result in incorrect synthesis results.
- The `mem2reg` attribute on modules or arrays forces the early conversion of arrays to separate registers.
- The `nomeminit` attribute on modules or arrays prohibits the creation of initialized memories. This effectively puts `mem2reg` on all memories that are written to in an `initial` block and are not ROMs.
- The `nolatches` attribute on modules or always-blocks prohibits the generation of logic-loops for latches. Instead all not explicitly assigned values default to x-bits. This does not affect clocked storage elements such as flip-flops.
- The `nosync` attribute on registers prohibits the generation of a storage element. The register itself will always have all bits set to 'x' (undefined). The variable may only be used as blocking assigned temporary variable within an always block. This is mostly used internally by Yosys to synthesize Verilog functions and access arrays.
- The `nowrshmsk` attribute on a register prohibits the generation of shift-and-mask type circuits for writing to bit slices of that register.
- The `onehot` attribute on wires mark them as one-hot state register. This is used for example for memory port sharing and set by the fsm_map pass.
- The `blackbox` attribute on modules is used to mark empty stub modules that have the same ports as the real thing but do not contain information on the internal configuration. This modules are only

used by the synthesis passes to identify input and output ports of cells. The Verilog backend also does not output blackbox modules on default. *read_verilog*, unless called with `-noblackbox` will automatically set the blackbox attribute on any empty module it reads.

- The `noblackbox` attribute set on an empty module prevents *read_verilog* from automatically setting the blackbox attribute on the module.
- The `whitebox` attribute on modules triggers the same behavior as `blackbox`, but is for whitebox modules, i.e. library modules that contain a behavioral model of the cell type.
- The `lib_whitebox` attribute overwrites `whitebox` when *read_verilog* is run in `-lib` mode. Otherwise it's automatically removed.
- The `dynports` attribute is used by the Verilog front-end to mark modules that have ports with a width that depends on a parameter.
- The `hdlname` attribute is used by some passes to document the original (HDL) name of a module when renaming a module. It should contain a single name, or, when describing a hierarchical name in a flattened design, multiple names separated by a single space character.
- The `keep` attribute on cells and wires is used to mark objects that should never be removed by the optimizer. This is used for example for cells that have hidden connections that are not part of the netlist, such as IO pads. Setting the `keep` attribute on a module has the same effect as setting it on all instances of the module.
- The `keep_hierarchy` attribute on cells and modules keeps the *flatten* command from flattening the indicated cells and modules.
- The `gate_cost_equivalent` attribute on a module can be used to specify the estimated cost of the module as a number of basic gate instances. See the help message of command *keep_hierarchy* which interprets this attribute.
- The `init` attribute on wires is set by the frontend when a register is initialized "FPGA-style" with `reg foo = val`. It can be used during synthesis to add the necessary reset logic.
- The `top` attribute on a module marks this module as the top of the design hierarchy. The *hierarchy* command sets this attribute when called with `-top`. Other commands, such as *flatten* and various backends use this attribute to determine the top module.
- The `src` attribute is set on cells and wires created by to the string `<hdl-file-name>:<line-number>` by the HDL front-end and is then carried through the synthesis. When entities are combined, a new |-separated string is created that contains all the strings from the original entities.
- The `defaultvalue` attribute is used to store default values for module inputs. The attribute is attached to the input wire by the HDL front-end when the input is declared with a default value.
- The `parameter` and `localparam` attributes are used to mark wires that represent module parameters or localparams (when the HDL front-end is run in `-pwires` mode).
- Wires marked with the `hierconn` attribute are connected to wires with the same name (format `cell_name.identifier`) when they are imported from sub-modules by *flatten*.
- The `clkbuf_driver` attribute can be set on an output port of a blackbox module to mark it as a clock buffer output, and thus prevent *clkbufmap* from inserting another clock buffer on a net driven by such output.
- The `clkbuf_sink` attribute can be set on an input port of a module to request clock buffer insertion by the *clkbufmap* pass.
- The `clkbuf_inv` attribute can be set on an output port of a module with the value set to the name of an input port of that module. When the *clkbufmap* would otherwise insert a clock buffer on this

output, it will instead try inserting the clock buffer on the input port (this is used to implement clock inverter cells that clock buffer insertion will "see through").

- The `clkbuf_inhibit` is the default attribute to set on a wire to prevent automatic clock buffer insertion by *clkbufmap*. This behaviour can be overridden by providing a custom selection to *clkbufmap*.
- The `invertible_pin` attribute can be set on a port to mark it as invertible via a cell parameter. The name of the inversion parameter is specified as the value of this attribute. The value of the inversion parameter must be of the same width as the port, with 1 indicating an inverted bit and 0 indicating a non-inverted bit.
- The `iopad_external_pin` attribute on a blackbox module's port marks it as the external-facing pin of an I/O pad, and prevents *iopadmap* from inserting another pad cell on it.
- The module attribute `abc9_lut` is an integer attribute indicating to *abc9* that this module describes a LUT with an area cost of this value, and propagation delays described using `specify` statements.
- The module attribute `abc9_box` is a boolean specifying a black/white-box definition, with propagation delays described using `specify` statements, for use by *abc9*.
- The port attribute `abc9_carry` marks the carry-in (if an input port) and carry-out (if output port) ports of a box. This information is necessary for *abc9* to preserve the integrity of carry-chains. Specifying this attribute onto a bus port will affect only its most significant bit.
- The module attribute `abc9_flop` is a boolean marking the module as a flip-flop. This allows *abc9* to analyse its contents in order to perform sequential synthesis.
- The frontend sets attributes `always_comb`, `always_latch` and `always_ff` on processes derived from SystemVerilog style always blocks according to the type of the always. These are checked for correctness in `proc_dlatch`.
- The cell attribute `wildcard_port_conns` represents wildcard port connections (SystemVerilog `.*`). These are resolved to concrete connections to matching wires in *hierarchy*.
- In addition to the `(* ... *)` attribute syntax, Yosys supports the non-standard `{* ... *}` attribute syntax to set default attributes for everything that comes after the `{* ... *}` statement. (Reset by adding an empty `{* *}` statement.)
- In module parameter and port declarations, and cell port and parameter lists, a trailing comma is ignored. This simplifies writing Verilog code generators a bit in some cases.
- Modules can be declared with `module mod_name(...);` (with three dots instead of a list of module ports). With this syntax it is sufficient to simply declare a module port as 'input' or 'output' in the module body.
- When defining a macro with `\`define`, all text between triple double quotes is interpreted as macro body, even if it contains unescaped newlines. The triple double quotes are removed from the macro body. For example:

```
`define MY_MACRO(a, b) """
  assign a = 23;
  assign b = 42;
"""
```

- The attribute `via_celltype` can be used to implement a Verilog task or function by instantiating the specified cell type. The value is the name of the cell type to use. For functions the name of the output port can be specified by appending it to the cell type separated by a whitespace. The body of the task or function is unused in this case and can be used to specify a behavioral model of the cell type for simulation. For example:

```
module my_add3(A, B, C, Y);
  parameter WIDTH = 8;
  input [WIDTH-1:0] A, B, C;
  output [WIDTH-1:0] Y;
  ...
endmodule

module top;
  ...
  (* via_celltype = "my_add3 Y" *)
  (* via_celltype_defparam_WIDTH = 32 *)
  function [31:0] add3;
    input [31:0] A, B, C;
    begin
      add3 = A + B + C;
    end
  endfunction
  ...
endmodule
```

- The `wiretype` attribute is added by the verilog parser for wires of a typedef'd type to indicate the type identifier.
- Various `enum_value_{value}` attributes are added to wires of an enumerated type to give a map of possible enum items to their values.
- The `enum_base_type` attribute is added to enum items to indicate which enum they belong to (enums – anonymous and otherwise – are automatically named with an auto-incrementing counter). Note that enums are currently not strongly typed.
- A limited subset of DPI-C functions is supported. The plugin mechanism (see `help plugin`) can be used to load .so files with implementations of DPI-C routines. As a non-standard extension it is possible to specify a plugin alias using the `<alias>:` syntax. For example:

```
module dpitest;
  import "DPI-C" function foo:round = real my_round (real);
  parameter real r = my_round(12.345);
endmodule
```

```
$ yosys -p 'plugin -a foo -i /lib/libm.so; read_verilog dpitest.v'
```

- Sized constants (the syntax `<size>'s?[bodh]<value>`) support constant expressions as `<size>`. If the expression is not a simple identifier, it must be put in parentheses. Examples: `WIDTH'd42`, `(4+2)'b101010`
- The system tasks `$finish`, `$stop` and `$display` are supported in initial blocks in an unconditional context (only if/case statements on expressions over parameters and constant values are allowed). The intended use for this is synthesis-time DRC.
- There is limited support for converting `specify .. endspecify` statements to special `$specify2`, `$specify3`, and `$specrule` cells, for use in blackboxes and whiteboxes. Use `read_verilog -specify` to enable this functionality. (By default these blocks are ignored.)
- The `reprocess_after` internal attribute is used by the Verilog frontend to mark cells with bindings which might depend on the specified instantiated module. Modules with such cells will be reprocessed during the *`hierarchy`* pass once the referenced module definition(s) become available.

- The `smtlib2_module` attribute can be set on a blackbox module to specify a formal model directly using SMT-LIB 2. For such a module, the `smtlib2_comb_expr` attribute can be used on output ports to define their value using an SMT-LIB 2 expression. For example:

```
(* blackbox *)
(* smtlib2_module *)
module submod(a, b);
  input [7:0] a;
  (* smtlib2_comb_expr = "(bvnot a)" *)
  output [7:0] b;
endmodule
```

4.5.3 Non-standard or SystemVerilog features for formal verification

- Support for `assert`, `assume`, `restrict`, and `cover` is enabled when *read_verilog* is called with `-formal`.
- The system task `$initstate` evaluates to 1 in the initial state and to 0 otherwise.
- The system function `$anyconst` evaluates to any constant value. This is equivalent to declaring a reg as `rand const`, but also works outside of checkers. (Yosys also supports `rand const` outside checkers.)
- The system function `$anyseq` evaluates to any value, possibly a different value in each cycle. This is equivalent to declaring a reg as `rand`, but also works outside of checkers. (Yosys also supports `rand` variables outside checkers.)
- The system functions `$allconst` and `$allseq` can be used to construct formal exist-forall problems. Assumptions only hold if the trace satisfies the assumption for all `$allconst/$allseq` values. For assertions and cover statements it is sufficient if just one `$allconst/$allseq` value triggers the property (similar to `$anyconst/$anyseq`).
- Wires/registers declared using the `anyconst/anyseq/allconst/allseq` attribute (for example `(* anyconst *) reg [7:0] foobar;`) will behave as if driven by a `$anyconst/$anyseq/$allconst/$allseq` function.
- The SystemVerilog tasks `$past`, `$stable`, `$rose` and `$fell` are supported in any clocked block.
- The syntax `@($global_clock)` can be used to create FFs that have no explicit clock input (`$ff` cells). The same can be achieved by using `@(posedge <netname>)` or `@(negedge <netname>)` when `<netname>` is marked with the `(* gclk *)` Verilog attribute.

4.5.4 Supported features from SystemVerilog

When *read_verilog* is called with `-sv`, it accepts some language features from SystemVerilog:

- The `assert` statement from SystemVerilog is supported in its most basic form. In module context: `assert property (<expression>);` and within an always block: `assert(<expression>);`. It is transformed to an `$assert` cell.
- The `assume`, `restrict`, and `cover` statements from SystemVerilog are also supported. The same limitations as with the `assert` statement apply.
- The keywords `always_comb`, `always_ff` and `always_latch`, `logic` and `bit` are supported.
- Declaring free variables with `rand` and `rand const` is supported.
- Checkers without a port list that do not need to be instantiated (but instead behave like a named block) are supported.

- SystemVerilog packages are supported. Once a SystemVerilog file is read into a design with *read_verilog*, all its packages are available to SystemVerilog files being read into the same design afterwards.
- **typedefs are supported (including inside packages)**
  - type casts are currently not supported
- **enums are supported (including inside packages)**
  - but are currently not strongly typed
- **packed structs and unions are supported**
  - arrays of packed structs/unions are currently not supported
  - structure literals are currently not supported
- **multidimensional arrays are supported**
  - array assignment of unpacked arrays is currently not supported
  - array literals are currently not supported
- SystemVerilog interfaces (SVIs) are supported. Modports for specifying whether ports are inputs or outputs are supported.
- Assignments within expressions are supported.

4.6 Hashing and associative data structures in Yosys

4.6.1 Container classes based on hashing

Yosys uses `dict<K, T>` and `pool<T>` as main container classes. `dict<K, T>` is essentially a replacement for `std::unordered_map<K, T>` and `pool<T>` is a replacement for `std::unordered_set<T>`. The main characteristics are:

- **`dict<K, T>` and `pool<T>` are about 2x faster than the std containers**
  (though this claim hasn't been verified for over 10 years)
- **references to elements in a `dict<K, T>` or `pool<T>` are invalidated by**
  insert and remove operations (similar to `std::vector<T>` on `push_back()`).
- **some iterators are invalidated by `erase()`. specifically, iterators**
  that have not passed the erased element yet are invalidated. (`erase()` itself returns valid iterator to the next element.)
- **no iterators are invalidated by `insert()`. elements are inserted at**
  `begin()`. i.e. only a new iterator that starts at `begin()` will see the inserted elements.
- **the method `.count(key, iterator)` is like `.count(key)` but only**
  considers elements that can be reached via the iterator.
- **iterators can be compared. `it1 < it2` means that the position of `t2`**
  can be reached via `t1` but not vice versa.
- **the method `.sort()` can be used to sort the elements in the container**
  the container stays sorted until elements are added or removed.
- **`dict<K, T>` and `pool<T>` will have the same order of iteration across**
  all compilers, standard libraries and architectures.

In addition to `dict<K, T>` and `pool<T>` there is also an `idict<K>` that creates a bijective map from `K` to the integers. For example:

```
idict<string, 42> si;
log("%d\n", si("hello"));      // will print 42
log("%d\n", si("world"));      // will print 43
log("%d\n", si.at("world"));   // will print 43
log("%d\n", si.at("dummy"));   // will throw exception
log("%s\n", si[42].c_str()));  // will print hello
log("%s\n", si[43].c_str()));  // will print world
log("%s\n", si[44].c_str()));  // will throw exception
```

It is not possible to remove elements from an idict.

Finally `mfp<K>` implements a merge-find set data structure (aka. disjoint-set or union-find) over the type `K` ("mfp" = merge-find-promote).

4.6.2 The hash function

The hash function generally used in Yosys is the XOR version of DJB2:

```
state = ((state << 5) + state) ^ value
```

This is an old-school hash designed to hash ASCII characters. Yosys doesn't hash a lot of ASCII text, but it still happens to be a local optimum due to factors described later.

Hash function quality is multi-faceted and highly dependent on what is being hashed. Yosys isn't concerned by any cryptographic qualities, instead the goal is minimizing total hashing collision risk given the data patterns within Yosys. In general, a good hash function typically folds values into a state accumulator with a mathematical function that is fast to compute and has some beneficial properties. One of these is the avalanche property, which demands that a small change such as flipping a bit or incrementing by one in the input produces a large, unpredictable change in the output. Additionally, the bit independence criterion states that any pair of output bits should change independently when any single input bit is inverted. These properties are important for avoiding hash collision on data patterns like the hash of a sequence not colliding with its permutation, not losing from the state the information added by hashing preceding elements, etc.

DJB2 lacks these properties. Instead, since Yosys hashes large numbers of data structures composed of incrementing integer IDs, Yosys abuses the predictability of DJB2 to get lower hash collisions, with regular nature of the hashes surviving through the interaction with the "modulo prime" operations in the associative data structures. For example, some most common objects in Yosys are interned `IdString`s of incrementing indices or `SigBit`s with bit offsets into wire (represented by its unique `IdString` name) as the typical case. This is what makes DJB2 a local optimum. Additionally, the ADD version of DJB2 (like above but with addition instead of XOR) is used to this end for some types, abandoning the general pattern of folding values into a state value.

4.6.3 Making a type hashable

Let's first take a look at the external interface on a simplified level. Generally, to get the hash for `T obj`, you would call the utility function `run_hash<T>(const T& obj)`, corresponding to `hash_ops<T>::hash(obj)`, the default implementation of which uses `hash_ops<T>::hash_into(Hasher(), obj)`. `Hasher` is the class actually implementing the hash function, hiding its initialized internal state, and passing it out on `hash_t yield()` with perhaps some finalization steps.

`hash_ops<T>` is the star of the show. By default it pulls the `Hasher h` through a `Hasher T::hash_into(Hasher h)` method. That's the method you have to implement to make a record (class or struct) type easily hashable with Yosys hashlib associative data structures.

`hash_ops<T>` is specialized for built-in types like `int` or `bool` and treats pointers the same as integers, so it doesn't dereference pointers. Since many RTLIL data structures like `RTLIL::Wire` carry their own unique

index `Hasher::hash_t hashidx_;`, there are specializations for `hash_ops<Wire*>` and others in `kernel/hashlib.h` that actually dereference the pointers and call `hash_into` on the instances pointed to.

`hash_ops<T>` is also specialized for simple compound types like `std::pair<U>` by calling hash_into in sequence on its members. For flexible size containers like `std::vector<U>` the size of the container is hashed first. That is also how implementing hashing for a custom record data type should be - unless there is strong reason to do otherwise, call `h.eat(m)` on the `Hasher h` you have received for each member in sequence and `return h;`.

The `hash_ops<T>::hash(obj)` method is not indended to be called when context of implementing the hashing for a record or other compound type. When writing it, you should connect it to `hash_ops<T>::hash_into(Hasher h)` as shown below. If you have a strong reason to do so, and you have to create a special implementation for top-level hashing, look at how `hash_ops<RTLIL::SigBit>::hash(...)` is implemented in `kernel/rtlil.h`.

4.6.4 Porting plugins from the legacy interface

Previously, the interface to implement hashing on custom types was just `unsigned int T::hash() const`. This meant hashes for members were computed independently and then ad-hoc combined with the hash function with some xorshift operations thrown in to mix bits together somewhat. A plugin can stay compatible with both versions prior and after the break by implementing both interfaces based on the existance and value of `YS_HASHING_VERSION`.

Listing 4.43: Example hash compatibility wrapper

```
#ifndef YS_HASHING_VERSION
unsigned int T::hash() const {
   return mkhash(a, b);
}
#elif YS_HASHING_VERSION == 1
Hasher T::hash_into(Hasher h) const {
   h.eat(a);
   h.eat(b);
   return h;
}
Hasher T::hash() const {
   Hasher h;
   h.eat(*this);
   return h;
}
#else
#error "Unsupported hashing interface"
#endif
```

Feel free to contact Yosys maintainers with related issues.

CHAPTER

FIVE

A PRIMER ON DIGITAL CIRCUIT SYNTHESIS

This chapter contains a short introduction to the basic principles of digital circuit synthesis.

5.1 Levels of abstraction

Digital circuits can be represented at different levels of abstraction. During the design process a circuit is usually first specified using a higher level abstraction. Implementation can then be understood as finding a functionally equivalent representation at a lower abstraction level. When this is done automatically using software, the term synthesis is used.

So synthesis is the automatic conversion of a high-level representation of a circuit to a functionally equivalent low-level representation of a circuit. Figure 5.1 lists the different levels of abstraction and how they relate to different kinds of synthesis.

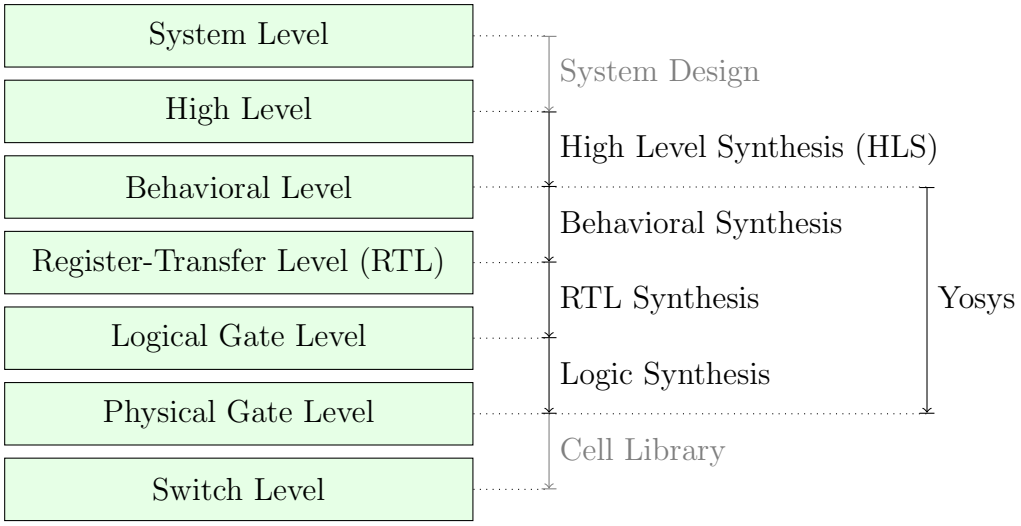

Fig. 5.1: Different levels of abstraction and synthesis.

Regardless of the way a lower level representation of a circuit is obtained (synthesis or manual design), the lower level representation is usually verified by comparing simulation results of the lower level and the higher level representation[1]. Therefore even if no synthesis is used, there must still be a simulatable representation of the circuit in all levels to allow for verification of the design.

Note: The exact meaning of terminology such as "High-Level" is of course not fixed over time. For example the HDL "ABEL" was first introduced in 1985 as "A High-Level Design Language for Programmable Logic

[1] In recent years formal equivalence checking also became an important verification method for validating RTL and lower abstraction representation of the design.

Devices" [LHBB85], but would not be considered a "High-Level Language" today.

5.1.1 System level

The System Level abstraction of a system only looks at its biggest building blocks like CPUs and computing cores. At this level the circuit is usually described using traditional programming languages like C/C++ or Matlab. Sometimes special software libraries are used that are aimed at simulation circuits on the system level, such as SystemC.

Usually no synthesis tools are used to automatically transform a system level representation of a circuit to a lower-level representation. But system level design tools exist that can be used to connect system level building blocks.

The IEEE 1685-2009 standard defines the IP-XACT file format that can be used to represent designs on the system level and building blocks that can be used in such system level designs. [A+10]

5.1.2 High level

The high-level abstraction of a system (sometimes referred to as algorithmic level) is also often represented using traditional programming languages, but with a reduced feature set. For example when representing a design at the high level abstraction in C, pointers can only be used to mimic concepts that can be found in hardware, such as memory interfaces. Full featured dynamic memory management is not allowed as it has no corresponding concept in digital circuits.

Tools exist to synthesize high level code (usually in the form of C/C++/SystemC code with additional metadata) to behavioural HDL code (usually in the form of Verilog or VHDL code). Aside from the many commercial tools for high level synthesis there are also a number of FOSS tools for high level synthesis .

5.1.3 Behavioural level

At the behavioural abstraction level a language aimed at hardware description such as Verilog or VHDL is used to describe the circuit, but so-called behavioural modelling is used in at least part of the circuit description. In behavioural modelling there must be a language feature that allows for imperative programming to be used to describe data paths and registers. This is the always-block in Verilog and the process-block in VHDL.

In behavioural modelling, code fragments are provided together with a sensitivity list; a list of signals and conditions. In simulation, the code fragment is executed whenever a signal in the sensitivity list changes its value or a condition in the sensitivity list is triggered. A synthesis tool must be able to transfer this representation into an appropriate datapath followed by the appropriate types of register.

For example consider the following Verilog code fragment:

```
1 always @(posedge clk)
2     y <= a + b;
```

In simulation the statement `y <= a + b` is executed whenever a positive edge on the signal `clk` is detected. The synthesis result however will contain an adder that calculates the sum `a + b` all the time, followed by a d-type flip-flop with the adder output on its D-input and the signal `y` on its Q-output.

Usually the imperative code fragments used in behavioural modelling can contain statements for conditional execution (`if`- and `case`-statements in Verilog) as well as loops, as long as those loops can be completely unrolled.

Interestingly there seems to be no other FOSS Tool that is capable of performing Verilog or VHDL behavioural syntheses besides Yosys.

5.1.4 Register-Transfer Level (RTL)

On the Register-Transfer Level the design is represented by combinatorial data paths and registers (usually d-type flip flops). The following Verilog code fragment is equivalent to the previous Verilog example, but is in RTL representation:

```
assign tmp = a + b;       // combinatorial data path

always @(posedge clk)     // register
    y <= tmp;
```

A design in RTL representation is usually stored using HDLs like Verilog and VHDL. But only a very limited subset of features is used, namely minimalistic always-blocks (Verilog) or process-blocks (VHDL) that model the register type used and unconditional assignments for the datapath logic. The use of HDLs on this level simplifies simulation as no additional tools are required to simulate a design in RTL representation.

Many optimizations and analyses can be performed best at the RTL level. Examples include FSM detection and optimization, identification of memories or other larger building blocks and identification of shareable resources.

Note that RTL is the first abstraction level in which the circuit is represented as a graph of circuit elements (registers and combinatorial cells) and signals. Such a graph, when encoded as list of cells and connections, is called a netlist.

RTL synthesis is easy as each circuit node element in the netlist can simply be replaced with an equivalent gate-level circuit. However, usually the term RTL synthesis does not only refer to synthesizing an RTL netlist to a gate level netlist but also to performing a number of highly sophisticated optimizations within the RTL representation, such as the examples listed above.

A number of FOSS tools exist that can perform isolated tasks within the domain of RTL synthesis steps. But there seems to be no FOSS tool that covers a wide range of RTL synthesis operations.

5.1.5 Logical gate level

At the logical gate level the design is represented by a netlist that uses only cells from a small number of single-bit cells, such as basic logic gates (AND, OR, NOT, XOR, etc.) and registers (usually D-Type Flip-flops).

A number of netlist formats exists that can be used on this level, e.g. the Electronic Design Interchange Format (EDIF), but for ease of simulation often a HDL netlist is used. The latter is a HDL file (Verilog or VHDL) that only uses the most basic language constructs for instantiation and connecting of cells.

There are two challenges in logic synthesis: First finding opportunities for optimizations within the gate level netlist and second the optimal (or at least good) mapping of the logic gate netlist to an equivalent netlist of physically available gate types.

The simplest approach to logic synthesis is two-level logic synthesis, where a logic function is converted into a sum-of-products representation, e.g. using a Karnaugh map. This is a simple approach, but has exponential worst-case effort and cannot make efficient use of physical gates other than AND/NAND-, OR/NOR- and NOT-Gates.

Therefore modern logic synthesis tools utilize much more complicated multi-level logic synthesis algorithms [BHSV90]. Most of these algorithms convert the logic function to a Binary-Decision-Diagram (BDD) or And-Inverter-Graph (AIG) and work from that representation. The former has the advantage that it has a unique normalized form. The latter has much better worst case performance and is therefore better suited for the synthesis of large logic functions.

Good FOSS tools exists for multi-level logic synthesis .

Yosys contains basic logic synthesis functionality but can also use ABC for the logic synthesis step. Using ABC is recommended.

5.1.6 Physical gate level

On the physical gate level only gates are used that are physically available on the target architecture. In some cases this may only be NAND, NOR and NOT gates as well as D-Type registers. In other cases this might include cells that are more complex than the cells used at the logical gate level (e.g. complete half-adders). In the case of an FPGA-based design the physical gate level representation is a netlist of LUTs with optional output registers, as these are the basic building blocks of FPGA logic cells.

For the synthesis tool chain this abstraction is usually the lowest level. In case of an ASIC-based design the cell library might contain further information on how the physical cells map to individual switches (transistors).

5.1.7 Switch level

A switch level representation of a circuit is a netlist utilizing single transistors as cells. Switch level modelling is possible in Verilog and VHDL, but is seldom used in modern designs, as in modern digital ASIC or FPGA flows the physical gates are considered the atomic build blocks of the logic circuit.

5.1.8 Yosys

Yosys is a Verilog HDL synthesis tool. This means that it takes a behavioural design description as input and generates an RTL, logical gate or physical gate level description of the design as output. Yosys' main strengths are behavioural and RTL synthesis. A wide range of commands (synthesis passes) exist within Yosys that can be used to perform a wide range of synthesis tasks within the domain of behavioural, rtl and logic synthesis. Yosys is designed to be extensible and therefore is a good basis for implementing custom synthesis tools for specialised tasks.

5.2 Features of synthesizable Verilog

The subset of Verilog [A+06] that is synthesizable is specified in a separate IEEE standards document, the IEEE standard 1364.1-2002 [A+02]. This standard also describes how certain language constructs are to be interpreted in the scope of synthesis.

This section provides a quick overview of the most important features of synthesizable Verilog, structured in order of increasing complexity.

5.2.1 Structural Verilog

Structural Verilog (also known as Verilog Netlists) is a Netlist in Verilog syntax. Only the following language constructs are used in this case:

- Constant values
- Wire and port declarations
- Static assignments of signals to other signals
- Cell instantiations

Many tools (especially at the back end of the synthesis chain) only support structural Verilog as input. ABC is an example of such a tool. Unfortunately there is no standard specifying what Structural Verilog actually is, leading to some confusion about what syntax constructs are supported in structural Verilog when it comes to features such as attributes or multi-bit signals.

5.2.2 Expressions in Verilog

In all situations where Verilog accepts a constant value or signal name, expressions using arithmetic operations such as `+`, `-` and `*`, boolean operations such as `&` (AND), `|` (OR) and `^` (XOR) and many others (comparison operations, unary operator, etc.) can also be used.

During synthesis these operators are replaced by cells that implement the respective function.

Many FOSS tools that claim to be able to process Verilog in fact only support basic structural Verilog and simple expressions. Yosys can be used to convert full featured synthesizable Verilog to this simpler subset, thus enabling such applications to be used with a richer set of Verilog features.

5.2.3 Behavioural modelling

Code that utilizes the Verilog always statement is using Behavioural Modelling. In behavioural modelling, a circuit is described by means of imperative program code that is executed on certain events, namely any change, a rising edge, or a falling edge of a signal. This is a very flexible construct during simulation but is only synthesizable when one of the following is modelled:

- **Asynchronous or latched logic**
  In this case the sensitivity list must contain all expressions that are used within the always block. The syntax `@*` can be used for these cases. Examples of this kind include:

```
// asynchronous
always @* begin
    if (add_mode)
        y <= a + b;
    else
        y <= a - b;
end

// latched
always @* begin
    if (!hold)
        y <= a + b;
end
```

  Note that latched logic is often considered bad style and in many cases just the result of sloppy HDL design. Therefore many synthesis tools generate warnings whenever latched logic is generated.

- **Synchronous logic (with optional synchronous reset)**
  This is logic with d-type flip-flops on the output. In this case the sensitivity list must only contain the respective clock edge. Example:

```
// counter with synchronous reset
always @(posedge clk) begin
    if (reset)
        y <= 0;
    else
        y <= y + 1;
end
```

- **Synchronous logic with asynchronous reset**
  This is logic with d-type flip-flops with asynchronous resets on the output. In this case the sensitivity list must only contain the respective clock and reset edges. The values assigned in the reset branch must be constant. Example:

```
// counter with asynchronous reset
always @(posedge clk, posedge reset) begin
    if (reset)
        y <= 0;
    else
        y <= y + 1;
end
```

Many synthesis tools support a wider subset of flip-flops that can be modelled using always-statements (including Yosys). But only the ones listed above are covered by the Verilog synthesis standard and when writing new designs one should limit herself or himself to these cases.

In behavioural modelling, blocking assignments (=) and non-blocking assignments (<=) can be used. The concept of blocking vs. non-blocking assignment is one of the most misunderstood constructs in Verilog [CI00].

The blocking assignment behaves exactly like an assignment in any imperative programming language, while with the non-blocking assignment the right hand side of the assignment is evaluated immediately but the actual update of the left hand side register is delayed until the end of the time-step. For example the Verilog code `a <= b; b <= a;` exchanges the values of the two registers.

5.2.4 Functions and tasks

Verilog supports Functions and Tasks to bundle statements that are used in multiple places (similar to Procedures in imperative programming). Both constructs can be implemented easily by substituting the function/task-call with the body of the function or task.

5.2.5 Conditionals, loops and generate-statements

Verilog supports `if-else`-statements and `for`-loops inside `always`-statements.

It also supports both features in `generate`-statements on the module level. This can be used to selectively enable or disable parts of the module based on the module parameters (`if-else`) or to generate a set of similar subcircuits (`for`).

While the `if-else`-statement inside an always-block is part of behavioural modelling, the three other cases are (at least for a synthesis tool) part of a built-in macro processor. Therefore it must be possible for the synthesis tool to completely unroll all loops and evaluate the condition in all `if-else`-statement in `generate`-statements using const-folding..

5.2.6 Arrays and memories

Verilog supports arrays. This is in general a synthesizable language feature. In most cases arrays can be synthesized by generating addressable memories. However, when complex or asynchronous access patterns are used, it is not possible to model an array as memory. In these cases the array must be modelled using individual signals for each word and all accesses to the array must be implemented using large multiplexers.

In some cases it would be possible to model an array using memories, but it is not desired. Consider the following delay circuit:

```
module (clk, in_data, out_data);

parameter BITS = 8;
parameter STAGES = 4;

input clk;
```

(continues on next page)

(continued from previous page)

```
input [BITS-1:0] in_data;
output [BITS-1:0] out_data;
reg [BITS-1:0] ffs [STAGES-1:0];

integer i;
always @(posedge clk) begin
    ffs[0] <= in_data;
    for (i = 1; i < STAGES; i = i+1)
        ffs[i] <= ffs[i-1];
end

assign out_data = ffs[STAGES-1];

endmodule
```

This could be implemented using an addressable memory with STAGES input and output ports. A better implementation would be to use a simple chain of flip-flops (a so-called shift register). This better implementation can either be obtained by first creating a memory-based implementation and then optimizing it based on the static address signals for all ports or directly identifying such situations in the language front end and converting all memory accesses to direct accesses to the correct signals.

5.3 Challenges in digital circuit synthesis

This section summarizes the most important challenges in digital circuit synthesis. Tools can be characterized by how well they address these topics.

5.3.1 Standards compliance

The most important challenge is compliance with the HDL standards in question (in case of Verilog the IEEE Standards 1364.1-2002 and 1364-2005). This can be broken down in two items:

- Completeness of implementation of the standard
- Correctness of implementation of the standard

Completeness is mostly important to guarantee compatibility with existing HDL code. Once a design has been verified and tested, HDL designers are very reluctant regarding changes to the design, even if it is only about a few minor changes to work around a missing feature in a new synthesis tool.

Correctness is crucial. In some areas this is obvious (such as correct synthesis of basic behavioural models). But it is also crucial for the areas that concern minor details of the standard, such as the exact rules for handling signed expressions, even when the HDL code does not target different synthesis tools. This is because (unlike software source code that is only processed by compilers), in most design flows HDL code is not only processed by the synthesis tool but also by one or more simulators and sometimes even a formal verification tool. It is key for this verification process that all these tools use the same interpretation for the HDL code.

5.3.2 Optimizations

Generally it is hard to give a one-dimensional description of how well a synthesis tool optimizes the design. First of all because not all optimizations are applicable to all designs and all synthesis tasks. Some optimizations work (best) on a coarse-grained level (with complex cells such as adders or multipliers) and others work (best) on a fine-grained level (single bit gates). Some optimizations target area and others target speed. Some work well on large designs while others don't scale well and can only be applied to small designs.

A good tool is capable of applying a wide range of optimizations at different levels of abstraction and gives the designer control over which optimizations are performed (or skipped) and what the optimization goals are.

5.3.3 Technology mapping

Technology mapping is the process of converting the design into a netlist of cells that are available in the target architecture. In an ASIC flow this might be the process-specific cell library provided by the fab. In an FPGA flow this might be LUT cells as well as special function units such as dedicated multipliers. In a coarse-grain flow this might even be more complex special function units.

An open and vendor independent tool is especially of interest if it supports a wide range of different types of target architectures.

5.4 Script-based synthesis flows

A digital design is usually started by implementing a high-level or system-level simulation of the desired function. This description is then manually transformed (or re-implemented) into a synthesizable lower-level description (usually at the behavioural level) and the equivalence of the two representations is verified by simulating both and comparing the simulation results.

Then the synthesizable description is transformed to lower-level representations using a series of tools and the results are again verified using simulation. This process is illustrated in Fig. 5.2.

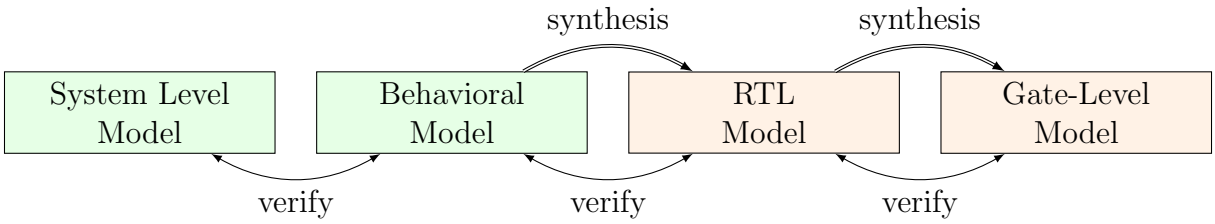

Fig. 5.2: Typical design flow. Green boxes represent manually created models. Orange boxes represent models generated by synthesis tools.

In this example the System Level Model and the Behavioural Model are both manually written design files. After the equivalence of system level model and behavioural model has been verified, the lower level representations of the design can be generated using synthesis tools. Finally the RTL Model and the Gate-Level Model are verified and the design process is finished.

However, in any real-world design effort there will be multiple iterations for this design process. The reason for this can be the late change of a design requirement or the fact that the analysis of a low-abstraction model (e.g. gate-level timing analysis) revealed that a design change is required in order to meet the design requirements (e.g. maximum possible clock speed).

Whenever the behavioural model or the system level model is changed their equivalence must be re-verified by re-running the simulations and comparing the results. Whenever the behavioural model is changed the synthesis must be re-run and the synthesis results must be re-verified.

In order to guarantee reproducibility it is important to be able to re-run all automatic steps in a design project with a fixed set of settings easily. Because of this, usually all programs used in a synthesis flow can be controlled using scripts. This means that all functions are available via text commands. When such a tool provides a GUI, this is complementary to, and not instead of, a command line interface.

Usually a synthesis flow in an UNIX/Linux environment would be controlled by a shell script that calls all required tools (synthesis and simulation/verification in this example) in the correct order. Each of these

tools would be called with a script file containing commands for the respective tool. All settings required for the tool would be provided by these script files so that no manual interaction would be necessary. These script files are considered design sources and should be kept under version control just like the source code of the system level and the behavioural model.

5.5 Methods from compiler design

Some parts of synthesis tools involve problem domains that are traditionally known from compiler design. This section addresses some of these domains.

5.5.1 Lexing and parsing

The best known concepts from compiler design are probably lexing and parsing. These are two methods that together can be used to process complex computer languages easily. [ASU86]

A lexer consumes single characters from the input and generates a stream of lexical tokens that consist of a type and a value. For example the Verilog input `assign foo = bar + 42;` might be translated by the lexer to the list of lexical tokens given in Tab. 5.1.

Table 5.1: Exemplary token list for the statement `assign foo = bar + 42;`

Token-Type	Token-Value
TOK_ASSIGN	-
TOK_IDENTIFIER	“foo”
TOK_EQ	-
TOK_IDENTIFIER	“bar”
TOK_PLUS	-
TOK_NUMBER	42
TOK_SEMICOLON	-

The lexer is usually generated by a lexer generator (e.g. flex) from a description file that is using regular expressions to specify the text pattern that should match the individual tokens.

The lexer is also responsible for skipping ignored characters (such as whitespace outside string constants and comments in the case of Verilog) and converting the original text snippet to a token value.

Note that individual keywords use different token types (instead of a keyword type with different token values). This is because the parser usually can only use the Token-Type to make a decision on the grammatical role of a token.

The parser then transforms the list of tokens into a parse tree that closely resembles the productions from the computer languages grammar. As the lexer, the parser is also typically generated by a code generator (e.g. bison) from a grammar description in Backus-Naur Form (BNF).

Let’s consider the following BNF (in Bison syntax):

```
1 assign_stmt: TOK_ASSIGN TOK_IDENTIFIER TOK_EQ expr TOK_SEMICOLON;
2 expr: TOK_IDENTIFIER | TOK_NUMBER | expr TOK_PLUS expr;
```

The parser converts the token list to the parse tree in Fig. 5.3. Note that the parse tree never actually exists as a whole as data structure in memory. Instead the parser calls user-specified code snippets (so-called reduce-functions) for all inner nodes of the parse tree in depth-first order.

In some very simple applications (e.g. code generation for stack machines) it is possible to perform the task at hand directly in the reduce functions. But usually the reduce functions are only used to build an

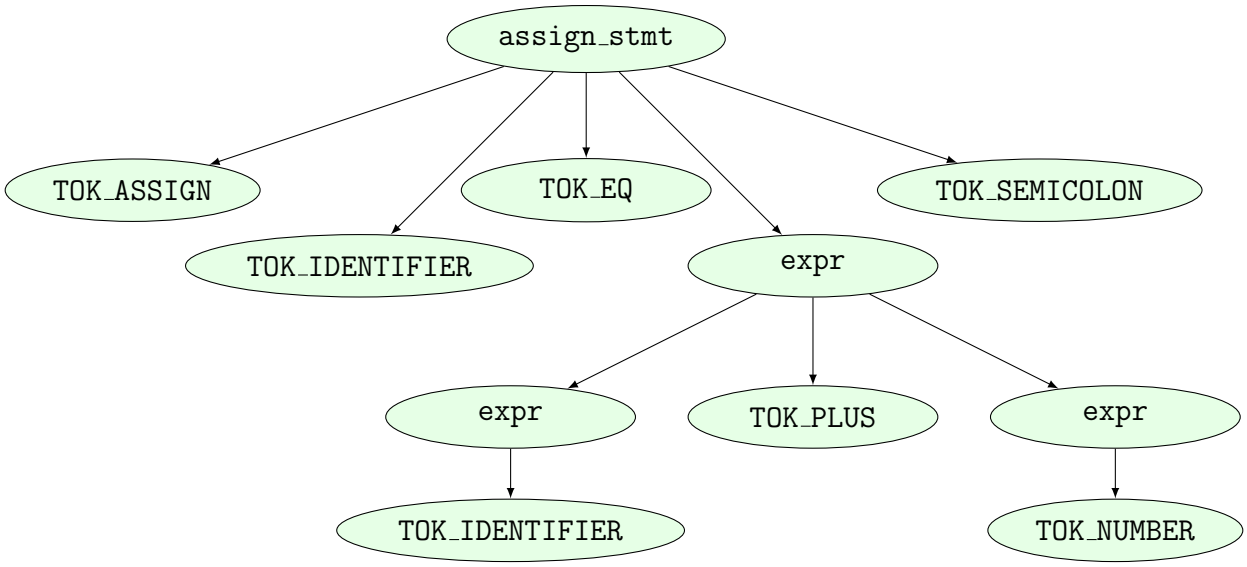

Fig. 5.3: Example parse tree for the Verilog expression `assign foo = bar + 42;`

in-memory data structure with the relevant information from the parse tree. This data structure is called an abstract syntax tree (AST).

The exact format for the abstract syntax tree is application specific (while the format of the parse tree and token list are mostly dictated by the grammar of the language at hand). Figure 5.4 illustrates what an AST for the parse tree in Fig. 5.3 could look like.

Usually the AST is then converted into yet another representation that is more suitable for further processing. In compilers this is often an assembler-like three-address-code intermediate representation. [ASU86]

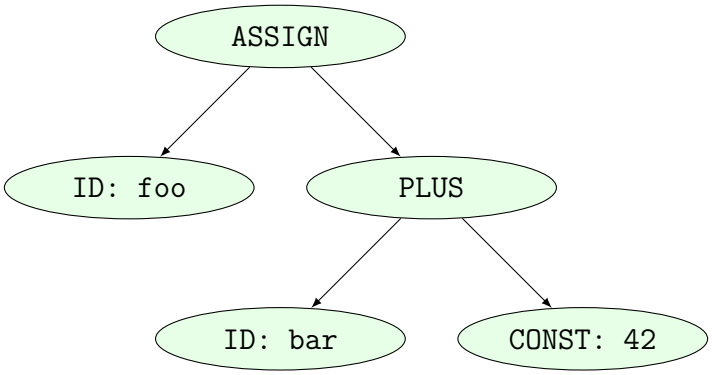

Fig. 5.4: Example abstract syntax tree for the Verilog expression `assign foo = bar + 42;`

5.5.2 Multi-pass compilation

Complex problems are often best solved when split up into smaller problems. This is certainly true for compilers as well as for synthesis tools. The components responsible for solving the smaller problems can be connected in two different ways: through Single-Pass Pipelining and by using Multiple Passes.

Traditionally a parser and lexer are connected using the pipelined approach: The lexer provides a function that is called by the parser. This function reads data from the input until a complete lexical token has been read. Then this token is returned to the parser. So the lexer does not first generate a complete list of lexical

tokens and then pass it to the parser. Instead they run concurrently and the parser can consume tokens as the lexer produces them.

The single-pass pipelining approach has the advantage of lower memory footprint (at no time must the complete design be kept in memory) but has the disadvantage of tighter coupling between the interacting components.

Therefore single-pass pipelining should only be used when the lower memory footprint is required or the components are also conceptually tightly coupled. The latter certainly is the case for a parser and its lexer. But when data is passed between two conceptually loosely coupled components it is often beneficial to use a multi-pass approach.

In the multi-pass approach the first component processes all the data and the result is stored in a in-memory data structure. Then the second component is called with this data. This reduces complexity, as only one component is running at a time. It also improves flexibility as components can be exchanged easier.

Most modern compilers are multi-pass compilers.

5.5.3 Static Single Assignment (SSA) form

In imperative programming (and behavioural HDL design) it is possible to assign the same variable multiple times. This can either mean that the variable is independently used in two different contexts or that the final value of the variable depends on a condition.

The following examples show C code in which one variable is used independently in two different contexts:

```
void demo1()
{
    int a = 1;
    printf("%d\n", a);

    a = 2;
    printf("%d\n", a);
}
```

```
void demo1()
{
    int a = 1;
    printf("%d\n", a);

    int b = 2;
    printf("%d\n", b);
}
```

```
void demo2(bool foo)
{
    int a;
    if (foo) {
        a = 23;
        printf("%d\n", a);
    } else {
        a = 42;
        printf("%d\n", a);
    }
}
```

```
void demo2(bool foo)
{
    int a, b;
    if (foo) {
        a = 23;
        printf("%d\n", a);
    } else {
        b = 42;
        printf("%d\n", b);
    }
}
```

In both examples the left version (only variable `a`) and the right version (variables `a` and `b`) are equivalent. Therefore it is desired for further processing to bring the code in an equivalent form for both cases.

In the following example the variable is assigned twice but it cannot be easily replaced by two variables:

```
void demo3(bool foo)
{
    int a = 23
    if (foo)
        a = 42;
    printf("%d\n", a);
}
```

Static single assignment (SSA) form is a representation of imperative code that uses identical representations for the left and right version of demos 1 and 2, but can still represent demo 3. In SSA form each assignment assigns a new variable (usually written with an index). But it also introduces a special Φ-function to merge the different instances of a variable when needed. In C-pseudo-code the demo 3 would be written as follows using SSA from:

```
void demo3(bool foo)
{
    int a_1, a_2, a_3;
    a_1 = 23
    if (foo)
        a_2 = 42;
    a_3 = phi(a_1, a_2);
    printf("%d\n", a_3);
}
```

The Φ-function is usually interpreted as "these variables must be stored in the same memory location" during code generation. Most modern compilers for imperative languages such as C/C++ use SSA form for at least some of its passes as it is very easy to manipulate and analyse.

CHAPTER

SIX

RTLIL TEXT REPRESENTATION

This appendix documents the text representation of RTLIL in extended Backus-Naur form (EBNF).

The grammar is not meant to represent semantic limitations. That is, the grammar is "permissive", and later stages of processing perform more rigorous checks.

The grammar is also not meant to represent the exact grammar used in the RTLIL frontend, since that grammar is specific to processing by lex and yacc, is even more permissive, and is somewhat less understandable than simple EBNF notation.

Finally, note that all statements (rules ending in `-stmt`) terminate in an end-of-line. Because of this, a statement cannot be broken into multiple lines.

6.1 Lexical elements

6.1.1 Characters

An RTLIL file is a stream of bytes. Strictly speaking, a "character" in an RTLIL file is a single byte. The lexer treats multi-byte encoded characters as consecutive single-byte characters. While other encodings *may* work, UTF-8 is known to be safe to use. Byte order marks at the beginning of the file will cause an error.

ASCII spaces (32) and tabs (9) separate lexer tokens.

A `nonws` character, used in identifiers, is any character whose encoding consists solely of bytes above ASCII space (32).

An `eol` is one or more consecutive ASCII newlines (10) and carriage returns (13).

6.1.2 Identifiers

There are two types of identifiers in RTLIL:

- Publically visible identifiers
- Auto-generated identifiers

```
<id>            ::= <public-id> | <autogen-id>
<public-id>     ::= \ <nonws>+
<autogen-id>    ::= $ <nonws>+
```

6.1.3 Values

A *value* consists of a width in bits and a bit representation, most significant bit first. Bits may be any of:

- `0`: A logic zero value
- `1`: A logic one value

- `x`: An unknown logic value (or don't care in case patterns)
- `z`: A high-impedance value (or don't care in case patterns)
- `m`: A marked bit (internal use only)
- `-`: A don't care value

An *integer* is simply a signed integer value in decimal format. **Warning:** Integer constants are limited to 32 bits. That is, they may only be in the range $[-2147483648, 2147483648)$. Integers outside this range will result in an error.

```
<value>         ::= <decimal-digit>+ ' <binary-digit>*
<decimal-digit> ::= 0 | 1 | 2 | 3 | 4 | 5 | 6 | 7 | 8 | 9
<binary-digit>  ::= 0 | 1 | x | z | m | -
<integer>       ::= -? <decimal-digit>+
```

6.1.4 Strings

A string is a series of characters delimited by double-quote characters. Within a string, any character except ASCII NUL (0) may be used. In addition, certain escapes can be used:

- `\n`: A newline
- `\t`: A tab
- `\ooo`: A character specified as a one, two, or three digit octal value

All other characters may be escaped by a backslash, and become the following character. Thus:

- `\\`: A backslash
- `\"`: A double-quote
- `\r`: An 'r' character

6.1.5 Comments

A comment starts with a `#` character and proceeds to the end of the line. All comments are ignored.

6.2 File

A file consists of an optional autoindex statement followed by zero or more modules.

```
<file> ::= <autoidx-stmt>? <module>*
```

6.2.1 Autoindex statements

The autoindex statement sets the global autoindex value used by Yosys when it needs to generate a unique name, e.g. `flattenN`. The N part is filled with the value of the global autoindex value, which is subsequently incremented. This global has to be dumped into RTLIL, otherwise e.g. dumping and running a pass would have different properties than just running a pass on a warm design.

```
<autoidx-stmt> ::= autoidx <integer> <eol>
```

6.2.2 Modules

Declares a module, with zero or more attributes, consisting of zero or more wires, memories, cells, processes, and connections.

```
<module>            ::= <attr-stmt>* <module-stmt> <module-body> <module-end-stmt>
<module-stmt>       ::= module <id> <eol>
<module-body>       ::= (<param-stmt>
                      |   <wire>
                      |   <memory>
                      |   <cell>
                      |   <process>)*
<param-stmt>        ::= parameter <id> <constant>? <eol>
<constant>          ::= <value> | <integer> | <string>
<module-end-stmt>   ::= end <eol>
```

6.2.3 Attribute statements

Declares an attribute with the given identifier and value.

```
<attr-stmt> ::= attribute <id> <constant> <eol>
```

6.2.4 Signal specifications

A signal is anything that can be applied to a cell port, i.e. a constant value, all bits or a selection of bits from a wire, or concatenations of those.

Warning: When an integer constant is a sigspec, it is always 32 bits wide, 2's complement. For example, a constant of -1 is the same as `32'11111111111111111111111111111111`, while a constant of 1 is the same as `32'1`.

See *RTLIL::SigSpec* for an overview of signal specifications.

```
<sigspec> ::= <constant>
            |  <wire-id>
            |  <sigspec> [ <integer> (:<integer>)? ]
            |  { <sigspec>* }
```

6.2.5 Connections

Declares a connection between the given signals.

```
<conn-stmt> ::= connect <sigspec> <sigspec> <eol>
```

6.2.6 Wires

Declares a wire, with zero or more attributes, with the given identifier and options in the enclosing module.

See *RTLIL::Cell and RTLIL::Wire* for an overview of wires.

```
<wire>          ::= <attr-stmt>* <wire-stmt>
<wire-stmt>     ::= wire <wire-option>* <wire-id> <eol>
<wire-id>       ::= <id>
<wire-option>   ::= width <integer>
                 |  offset <integer>
```

(continues on next page)

(continued from previous page)

```
                  |  input <integer>
                  |  output <integer>
                  |  inout <integer>
                  |  upto
                  |  signed
```

6.2.7 Memories

Declares a memory, with zero or more attributes, with the given identifier and options in the enclosing module.

See *RTLIL::Memory* for an overview of memory cells, and *Memories* for details about memory cell types.

```
<memory>         ::= <attr-stmt>* <memory-stmt>
<memory-stmt>    ::= memory <memory-option>* <id> <eol>
<memory-option>  ::= width <integer>
                  |  size <integer>
                  |  offset <integer>
```

6.2.8 Cells

Declares a cell, with zero or more attributes, with the given identifier and type in the enclosing module.

Cells perform functions on input signals. See *Internal cell library* for a detailed list of cell types.

```
<cell>              ::= <attr-stmt>* <cell-stmt> <cell-body-stmt>* <cell-end-stmt>
<cell-stmt>         ::= cell <cell-type> <cell-id> <eol>
<cell-id>           ::= <id>
<cell-type>         ::= <id>
<cell-body-stmt>    ::= parameter (signed | real)? <id> <constant> <eol>
                     |  connect <id> <sigspec> <eol>
<cell-end-stmt>     ::= end <eol>
```

6.2.9 Processes

Declares a process, with zero or more attributes, with the given identifier in the enclosing module. The body of a process consists of zero or more assignments followed by zero or more switches and zero or more syncs.

See *RTLIL::Process* for an overview of processes.

```
<process>        ::= <attr-stmt>* <proc-stmt> <process-body> <proc-end-stmt>
<proc-stmt>      ::= process <id> <eol>
<process-body>   ::= <assign-stmt>* <switch>* <sync>*
<assign-stmt>    ::= assign <dest-sigspec> <src-sigspec> <eol>
<dest-sigspec>   ::= <sigspec>
<src-sigspec>    ::= <sigspec>
<proc-end-stmt>  ::= end <eol>
```

6.2.10 Switches

Switches test a signal for equality against a list of cases. Each case specifies a comma-separated list of signals to check against. If there are no signals in the list, then the case is the default case. The body of a case consists of zero or more assignments followed by zero or more switches. Both switches and cases may have zero or more attributes.

```
<switch>            ::= <switch-stmt> <case>* <switch-end-stmt>
<switch-stmt>        := <attr-stmt>* switch <sigspec> <eol>
<case>              ::= <attr-stmt>* <case-stmt> <case-body>
<case-stmt>         ::= case <compare>? <eol>
<compare>           ::= <sigspec> (, <sigspec>)*
<case-body>         ::= <assign-stmt>* <switch>*
<switch-end-stmt>   ::= end <eol>
```

6.2.11 Syncs

Syncs update signals with other signals when an event happens. Such an event may be:

- An edge or level on a signal
- Global clock ticks
- Initialization
- Always

```
<sync>          ::= <sync-stmt> <update-stmt>*
<sync-stmt>     ::= sync <sync-type> <sigspec> <eol>
                 |  sync global <eol>
                 |  sync init <eol>
                 |  sync always <eol>
<sync-type>     ::= low | high | posedge | negedge | edge
<update-stmt>   ::= update <dest-sigspec> <src-sigspec> <eol>
```

CHAPTER

SEVEN

AUXILIARY LIBRARIES

The Yosys source distribution contains some auxiliary libraries that are compiled into Yosys and can be used in plugins.

7.1 BigInt

The files in `libs/bigint/` provide a library for performing arithmetic with arbitrary length integers. It is written by Matt McCutchen.

The BigInt library is used for evaluating constant expressions, e.g. using the ConstEval class provided in kernel/consteval.h.

See also: http://mattmccutchen.net/bigint/

7.2 dlfcn-win32

The `dlfcn` library enables runtime loading of plugins without requiring recompilation of Yosys. The files in `libs/dlfcn-win32` provide an implementation of `dlfcn` for Windows.

See also: https://github.com/dlfcn-win32/dlfcn-win32

7.3 ezSAT

The files in `libs/ezsat` provide a library for simplifying generating CNF formulas for SAT solvers. It also contains bindings of MiniSAT. The ezSAT library is written by C. Wolf. It is used by the *sat* pass (see *sat - solve a SAT problem in the circuit*).

7.4 fst

`libfst` files from gtkwave are included in `libs/fst` to support reading/writing signal traces from/to the GTKWave developed FST format. This is primarily used in the *sim* command.

7.5 json11

For reading/writing designs from/to JSON, *read_json* and *write_json* should be used. For everything else there is the json11 library:

> json11 is a tiny JSON library for C++11, providing JSON parsing and serialization.

This library is used for outputting machine-readable statistics (*stat* with `-json` flag), using the RPC frontend (*connect_rpc*), and the yosys-witness `yw` format.

7.6 MiniSAT

The files in `libs/minisat` provide a high-performance SAT solver, used by the *sat* command.

7.7 SHA1

The files in `libs/sha1/` provide a public domain SHA1 implementation written by Steve Reid, Bruce Guenter, and Volker Grabsch. It is used for generating unique names when specializing parameterized modules.

7.8 SubCircuit

The files in `libs/subcircuit` provide a library for solving the subcircuit isomorphism problem. It is written by C. Wolf and based on the Ullmann Subgraph Isomorphism Algorithm [Ull76]. It is used by the extract pass (see *extract - find subcircuits and replace them with cells*).

CHAPTER

EIGHT

AUXILIARY PROGRAMS

Besides the main yosys executable, the Yosys distribution contains a set of additional helper programs.

8.1 yosys-config

The `yosys-config` tool (an auto-generated shell-script) can be used to query compiler options and other information needed for building loadable modules for Yosys. See *Writing extensions* for details.

```
Usage: ./yosys-config [--exec] [--prefix pf] args..
       ./yosys-config --build modname.so cppsources..

Replacement args:
    --cxx         g++
    --cxxflags    -g -O2 -flto=auto -ffat-lto-objects \
                      -fstack-protector-strong -Wformat -Werror=format-security \
                      -Wall -Wextra -ggdb -I"/usr/share/yosys/include" -MD \
                      -MP -D_YOSYS_ -fPIC -I/usr/include -DYOSYS_VER=\"0.52\" \
                      -DYOSYS_MAJOR=0 -DYOSYS_MINOR=52 -DYOSYS_COMMIT=0.52 \
                      -std=c++17 -O3 -DYOSYS_ENABLE_READLINE \
                      -DYOSYS_ENABLE_PLUGINS -DYOSYS_ENABLE_GLOB \
                      -DYOSYS_ENABLE_ZLIB -I/usr/include/tcl8.6 \
                      -DYOSYS_ENABLE_TCL -DYOSYS_ENABLE_ABC -DYOSYS_ENABLE_COVER
    --linkflags   -rdynamic
    --ldflags     (alias of --linkflags)
    --libs        -lstdc++ -lm -lrt -lreadline -lffi -ldl -lz -ltcl8.6 -ltclstub8.6
    --ldlibs      (alias of --libs)
    --bindir      /usr/bin
    --datdir      /usr/share/yosys

All other args are passed through as they are.

Use --exec to call a command instead of generating output. Example usage:

  ./yosys-config --exec --cxx --cxxflags --ldflags -o plugin.so -shared plugin.cc --libs

The above command can be abbreviated as:

  ./yosys-config --build plugin.so plugin.cc

Use --prefix to change the prefix for the special args from '--' to
something else. Example:
```

(continues on next page)

(continued from previous page)

```
  ./yosys-config --prefix @ bindir: @bindir

The args --bindir and --datdir can be directly followed by a slash and
additional text. Example:

  ./yosys-config --datdir/simlib.v
```

8.2 yosys-filterlib

Todo

how does a filterlib rules-file work?

The `yosys-filterlib` tool is a small utility that can be used to strip or extract information from a Liberty file. This can be useful for removing sensitive or proprietary information such as timing or other trade secrets.

```
Usage: filterlib [rules-file [liberty-file]]
   or: filterlib -verilogsim [liberty-file]
```

8.3 yosys-abc

This is a fork of ABC with a small set of custom modifications that have not yet been accepted upstream. Not all versions of Yosys work with all versions of ABC. So Yosys comes with its own yosys-abc to avoid compatibility issues between the two.

```
usage: ./yosys-abc [-c cmd] [-q cmd] [-C cmd] [-Q cmd] [-f script] [-h] [-o file] [-s] [-
↪t type] [-T type] [-x] [-b] [file]
    -c cmd        execute commands `cmd'
    -q cmd        execute commands `cmd' quietly
    -C cmd        execute commands `cmd', then continue in interactive mode
    -Q cmd        execute commands `cmd' quietly, then continue in interactive mode
    -F script        execute commands from a script file and echo commands
    -f script        execute commands from a script file
    -h                print the command usage
    -o file        specify output filename to store the result
    -s                do not read any initialization file
    -t type        specify input type (blif_mv (default), blif_mvs, blif, or none)
    -T type        specify output type (blif_mv (default), blif_mvs, blif, or none)
    -x                equivalent to '-t none -T none'
    -b                running in bridge mode
```

8.4 yosys-smtbmc

The `yosys-smtbmc` tool is a utility used by SBY for interacting with smt solvers.

```
yosys-smtbmc [options] <yosys_smt2_output>

    -h, --help
            show this message

    -t <num_steps>
    -t <skip_steps>:<num_steps>
    -t <skip_steps>:<step_size>:<num_steps>
        default: skip_steps=0, step_size=1, num_steps=20

    -g
        generate an arbitrary trace that satisfies
        all assertions and assumptions.

    -i
        instead of BMC run temporal induction

    -c
        instead of regular BMC run cover analysis

    -m <module_name>
        name of the top module

    --smtc <constr_filename>
        read constraints file

    --cex <cex_filename>
        read cex file as written by ABC's "write_cex -n"

    --aig <prefix>
        read AIGER map file (as written by Yosys' "write_aiger -map")
        and AIGER witness file. The file names are <prefix>.aim for
        the map file and <prefix>.aiw for the witness file.

    --aig <aim_filename>:<aiw_filename>
        like above, but for map files and witness files that do not
        share a filename prefix (or use different file extensions).

    --aig-noheader
        the AIGER witness file does not include the status and
        properties lines.

    --yw <yosys_witness_filename>
        read a Yosys witness.

    --btorwit <btor_witness_filename>
        read a BTOR witness.

    --noinfo
```

(continues on next page)

(continued from previous page)

```
    only run the core proof, do not collect and print any
    additional information (e.g. which assert failed)

--presat
    check if the design with assumptions but without assertions
    is SAT before checking if assertions are UNSAT. This will
    detect if there are contradicting assumptions. In some cases
    this will also help to "warm up" the solver, potentially
    yielding a speedup.

--final-only
    only check final constraints, assume base case

--assume-skipped <start_step>
    assume asserts in skipped steps in BMC.
    no assumptions are created for skipped steps
    before <start_step>.

--dump-vcd <vcd_filename>
    write trace to this VCD file
    (hint: use 'write_smt2 -wires' for maximum
    coverage of signals in generated VCD file)

--dump-yw <yw_filename>
    write trace as a Yosys witness trace

--dump-vlogtb <verilog_filename>
    write trace as Verilog test bench

--vlogtb-top <hierarchical_name>
    use the given entity as top module for the generated
    Verilog test bench. The <hierarchical_name> is relative
    to the design top module without the top module name.

--dump-smtc <constr_filename>
    write trace as constraints file

--smtc-init
    write just the last state as initial constraint to smtc file

--smtc-top <old>[:<new>]
    replace <old> with <new> in constraints dumped to smtc
    file and only dump object below <old> in design hierarchy.

--noinit
    do not assume initial conditions in state 0

--dump-all
    when using -g or -i, create a dump file for each
    step. The character '%' is replaced in all dump
    filenames with the step number.
```

(continues on next page)

(continued from previous page)

```
    --append <num_steps>
        add <num_steps> time steps at the end of the trace
        when creating a counter example (this additional time
        steps will still be constrained by assumptions)

    --binary
        dump anyconst values as raw bit strings

    --keep-going
        continue BMC after the first failed assertion and report
        further failed assertions. To output multiple traces
        covering all found failed assertions, the character '%' is
        replaced in all dump filenames with an increasing number.
        In cover mode, don't stop when a cover trace contains a failed
        assertion.

    --check-witness
        check that the used witness file contains sufficient
        constraints to force an assertion failure.

    --detect-loops
        check if states are unique in temporal induction counter examples
        (this feature is experimental and incomplete)

    --incremental
        run in incremental mode (experimental)

    --track-assumes
        track individual assumptions and report a subset of used
        assumptions that are sufficient for the reported outcome. This
        can be used to debug PREUNSAT failures as well as to find a
        smaller set of sufficient assumptions.

    --minimize-assumes
        when using --track-assumes, solve for a minimal set of sufficient assumptions.

    -s <solver>
        set SMT solver: z3, yices, boolector, bitwuzla, cvc4, cvc5, mathsat, dummy
        default: yices

    -S <opt>
        pass <opt> as command line argument to the solver

    --timeout <value>
        set the solver timeout to the specified value (in seconds).

    --logic <smt2_logic>
        use the specified SMT2 logic (e.g. QF_AUFBV)

    --dummy <filename>
        if solver is "dummy", read solver output from that file
        otherwise: write solver output to that file
```

(continues on next page)

(continued from previous page)

```
    --smt2-option <option>=<value>
        enable an SMT-LIBv2 option.

    -v
        enable debug output

    --unroll
        unroll uninterpreted functions

    --noincr
        don't use incremental solving, instead restart solver for
        each (check-sat). This also avoids (push) and (pop).

    --noprogress
        disable timer display during solving
        (this option is set implicitly on Windows)

    --dump-smt2 <filename>
        write smt2 statements to file

    --info <smt2-info-stmt>
        include the specified smt2 info statement in the smt2 output

    --nocomments
        strip all comments from the generated smt2 code
```

8.5 yosys-witness

`yosys-witness` is a new tool to inspect and convert yosys witness traces. This is used in SBY and SCY for producing traces in a consistent format independent of the solver.

```
Usage: yosys-witness [OPTIONS] COMMAND [ARGS]...

Options:
  --help  Show this message and exit.

Commands:
  aiw2yw   Convert an AIGER witness trace into a Yosys witness trace.
  display  Display a Yosys witness trace in a human readable format.
  stats    Display statistics of a Yosys witness trace.
  wit2yw   Convert a BTOR witness trace into a Yosys witness trace.
  yw2aiw   Convert a Yosys witness trace into an AIGER witness trace.
  yw2yw    Transform a Yosys witness trace.
```

Note

`yosys-witness` requires click Python package for use.

Todo

see if we can get the two hanging appnotes as lit references

CHAPTER

NINE

INTERNAL CELL LIBRARY

The intermediate language used by Yosys (RTLIL) represents logic and memory with a series of cells. This section provides details for those cells, breaking them down into two major categories: coarse-grain word-level cells; and fine-grain gate-level cells. An additional section contains a list of properties which may be shared across multiple cells.

9.1 Word-level cells

Most of the RTL cells closely resemble the operators available in HDLs such as Verilog or VHDL. Therefore Verilog operators are used in the following sections to define the behaviour of the RTL cells.

Note that all RTL cells have parameters indicating the size of inputs and outputs. When passes modify RTL cells they must always keep the values of these parameters in sync with the size of the signals connected to the inputs and outputs.

Simulation models for the RTL cells can be found in the file `techlibs/common/simlib.v` in the Yosys source tree.

9.1.1 Unary operators

All unary RTL cells have one input port `A` and one output port `Y`. They also have the following parameters:

`A_SIGNED`
: Set to a non-zero value if the input `A` is signed and therefore should be sign-extended when needed.

`A_WIDTH`
: The width of the input port `A`.

`Y_WIDTH`
: The width of the output port `Y`.

Table 9.1: Cell types for unary operators with their corresponding Verilog expressions.

Verilog	Cell Type
`Y = ~A`	*`$not`*
`Y = +A`	*`$pos`*
`Y = -A`	*`$neg`*
`Y = &A`	*`$reduce_and`*
`Y = |A`	*`$reduce_or`*
`Y = ^A`	*`$reduce_xor`*
`Y = ~^A`	*`$reduce_xnor`*
`Y = |A`	*`$reduce_bool`*
`Y = !A`	*`$logic_not`*

For the unary cells that output a logical value (*$reduce_and*, *$reduce_or*, *$reduce_xor*, *$reduce_xnor*, *$reduce_bool*, *$logic_not*), when the Y_WIDTH parameter is greater than 1, the output is zero-extended, and only the least significant bit varies.

Note that *$reduce_or* and *$reduce_bool* generally represent the same logic function. But the *read_verilog* frontend will generate them in different situations. A *$reduce_or* cell is generated when the prefix | operator is being used. A *$reduce_bool* cell is generated when a bit vector is used as a condition in an if-statement or ?:-expression.

yosys> help $buf

A simple coarse-grain buffer cell type for the experimental buffered-normalized mode. Note this cell does't get removed by 'opt_clean' and is not recommended for general use.

Properties

is_evaluable

Simulation model (verilog)

Listing 9.1: simlib.v

```
98  module \$buf (A, Y);
99
100     parameter WIDTH = 0;
101
102     input [WIDTH-1:0] A;
103     output [WIDTH-1:0] Y;
104
105     assign Y = A;
106
107 endmodule
```

yosys> help $logic_not

A logical inverter. This corresponds to the Verilog unary prefix '!' operator.

Properties

is_evaluable

Simulation model (verilog)

Listing 9.2: simlib.v

```
1513 module \$logic_not (A, Y);
1514
1515     parameter A_SIGNED = 0;
1516     parameter A_WIDTH = 0;
1517     parameter Y_WIDTH = 0;
1518
1519     input [A_WIDTH-1:0] A;
1520     output [Y_WIDTH-1:0] Y;
1521
1522     generate
1523         if (A_SIGNED) begin:BLOCK1
1524             assign Y = !$signed(A);
1525         end else begin:BLOCK2
```

(continues on next page)

(continued from previous page)

```
1526            assign Y = !A;
1527        end
1528    endgenerate
1529
1530 endmodule
```

yosys> help $neg

An arithmetic inverter. This corresponds to the Verilog unary prefix '-' operator.

Properties

is_evaluable

Simulation model (verilog)

Listing 9.3: simlib.v

```
118 module \$neg (A, Y);
119
120     parameter A_SIGNED = 0;
121     parameter A_WIDTH = 0;
122     parameter Y_WIDTH = 0;
123
124     input [A_WIDTH-1:0] A;
125     output [Y_WIDTH-1:0] Y;
126
127     generate
128         if (A_SIGNED) begin:BLOCK1
129             assign Y = -$signed(A);
130         end else begin:BLOCK2
131             assign Y = -A;
132         end
133     endgenerate
134
135 endmodule
```

yosys> help $not

Bit-wise inverter

This corresponds to the Verilog unary prefix '~' operator.

Properties

is_evaluable

Simulation model (verilog)

Listing 9.4: simlib.v

```
40 module \$not (A, Y);
41
42     parameter A_SIGNED = 0;
43     parameter A_WIDTH = 0;
44     parameter Y_WIDTH = 0;
45
46     input [A_WIDTH-1:0] A;
```

(continues on next page)

(continued from previous page)

```
47      output [Y_WIDTH-1:0] Y;
48
49      generate
50          if (A_SIGNED) begin:BLOCK1
51              assign Y = ~$signed(A);
52          end else begin:BLOCK2
53              assign Y = ~A;
54          end
55      endgenerate
56
57  endmodule
```

yosys> help $pos

A buffer. This corresponds to the Verilog unary prefix '+' operator.

Properties

is_evaluable

Simulation model (verilog)

Listing 9.5: simlib.v

```
68  module \$pos (A, Y);
69
70      parameter A_SIGNED = 0;
71      parameter A_WIDTH = 0;
72      parameter Y_WIDTH = 0;
73
74      input [A_WIDTH-1:0] A;
75      output [Y_WIDTH-1:0] Y;
76
77      generate
78          if (A_SIGNED) begin:BLOCK1
79              assign Y = $signed(A);
80          end else begin:BLOCK2
81              assign Y = A;
82          end
83      endgenerate
84
85  endmodule
```

yosys> help $reduce_and

An AND reduction. This corresponds to the Verilog unary prefix '&' operator.

Properties

is_evaluable

Simulation model (verilog)

Listing 9.6: simlib.v

```
270 module \$reduce_and (A, Y);
271
272     parameter A_SIGNED = 0;
```

(continues on next page)

(continued from previous page)

```
    parameter A_WIDTH = 0;
    parameter Y_WIDTH = 0;

    input [A_WIDTH-1:0] A;
    output [Y_WIDTH-1:0] Y;

    generate
        if (A_SIGNED) begin:BLOCK1
            assign Y = &$signed(A);
        end else begin:BLOCK2
            assign Y = &A;
        end
    endgenerate

endmodule
```

yosys> help $reduce_bool

An OR reduction. This cell type is used instead of $reduce_or when a signal is implicitly converted to a boolean signal, e.g. for operands of '&&' and '||'.

Properties

is_evaluable

Simulation model (verilog)

Listing 9.7: simlib.v

```
module \$reduce_bool (A, Y);

    parameter A_SIGNED = 0;
    parameter A_WIDTH = 0;
    parameter Y_WIDTH = 0;

    input [A_WIDTH-1:0] A;
    output [Y_WIDTH-1:0] Y;

    generate
        if (A_SIGNED) begin:BLOCK1
            assign Y = !(!$signed(A));
        end else begin:BLOCK2
            assign Y = !(!A);
        end
    endgenerate

endmodule
```

yosys> help $reduce_or

An OR reduction. This corresponds to the Verilog unary prefix '|' operator.

Properties

is_evaluable

Simulation model (verilog)

Listing 9.8: simlib.v

```
298 module \$reduce_or (A, Y);
299
300     parameter A_SIGNED = 0;
301     parameter A_WIDTH = 0;
302     parameter Y_WIDTH = 0;
303
304     input [A_WIDTH-1:0] A;
305     output [Y_WIDTH-1:0] Y;
306
307     generate
308         if (A_SIGNED) begin:BLOCK1
309             assign Y = |$signed(A);
310         end else begin:BLOCK2
311             assign Y = |A;
312         end
313     endgenerate
314
315 endmodule
```

yosys> help $reduce_xnor

A XNOR reduction. This corresponds to the Verilog unary prefix '~^' operator.

Properties

is_evaluable

Simulation model (verilog)

Listing 9.9: simlib.v

```
354 module \$reduce_xnor (A, Y);
355
356     parameter A_SIGNED = 0;
357     parameter A_WIDTH = 0;
358     parameter Y_WIDTH = 0;
359
360     input [A_WIDTH-1:0] A;
361     output [Y_WIDTH-1:0] Y;
362
363     generate
364         if (A_SIGNED) begin:BLOCK1
365             assign Y = ~^$signed(A);
366         end else begin:BLOCK2
367             assign Y = ~^A;
368         end
369     endgenerate
370
371 endmodule
```

yosys> help $reduce_xor

A XOR reduction. This corresponds to the Verilog unary prefix '^' operator.

Properties

is_evaluable

`Simulation model` (verilog)

Listing 9.10: simlib.v

```
module \$reduce_xor (A, Y);

    parameter A_SIGNED = 0;
    parameter A_WIDTH = 0;
    parameter Y_WIDTH = 0;

    input [A_WIDTH-1:0] A;
    output [Y_WIDTH-1:0] Y;

    generate
        if (A_SIGNED) begin:BLOCK1
            assign Y = ^$signed(A);
        end else begin:BLOCK2
            assign Y = ^A;
        end
    endgenerate

endmodule
```

9.1.2 Binary operators

All binary RTL cells have two input ports `A` and `B` and one output port `Y`. They also have the following parameters:

`A_SIGNED`
: Set to a non-zero value if the input `A` is signed and therefore should be sign-extended when needed.

`A_WIDTH`
: The width of the input port `A`.

`B_SIGNED`
: Set to a non-zero value if the input `B` is signed and therefore should be sign-extended when needed.

`B_WIDTH`
: The width of the input port `B`.

`Y_WIDTH`
: The width of the output port `Y`.

Table 9.2: Cell types for binary operators with their corresponding Verilog expressions.

Verilog	Cell Type	Verilog	Cell Type
Y = A & B	*$and*	Y = A ** B	*$pow*
Y = A | B	*$or*	Y = A < B	*$lt*
Y = A ^ B	*$xor*	Y = A <= B	*$le*
Y = A ~^ B	*$xnor*	Y = A == B	*$eq*
Y = A << B	*$shl*	Y = A != B	*$ne*
Y = A >> B	*$shr*	Y = A >= B	*$ge*
Y = A <<< B	*$sshl*	Y = A > B	*$gt*
Y = A >>> B	*$sshr*	Y = A + B	*$add*
Y = A && B	*$logic_and*	Y = A - B	*$sub*
Y = A || B	*$logic_or*	Y = A * B	*$mul*
Y = A === B	*$eqx*	Y = A / B	*$div*
Y = A !== B	*$nex*	Y = A % B	*$mod*
N/A	*$shift*	N/A	*$divfloor*
N/A	*$shiftx*	N/A	*$modfloor*

The *$shl* and *$shr* cells implement logical shifts, whereas the *$sshl* and *$sshr* cells implement arithmetic shifts. The *$shl* and *$sshl* cells implement the same operation. All four of these cells interpret the second operand as unsigned, and require `B_SIGNED` to be zero.

Two additional shift operator cells are available that do not directly correspond to any operator in Verilog, *$shift* and *$shiftx*. The *$shift* cell performs a right logical shift if the second operand is positive (or unsigned), and a left logical shift if it is negative. The *$shiftx* cell performs the same operation as the *$shift* cell, but the vacated bit positions are filled with undef (x) bits, and corresponds to the Verilog indexed part-select expression.

For the binary cells that output a logical value (*$logic_and*, *$logic_or*, *$eqx*, *$nex*, *$lt*, *$le*, *$eq*, *$ne*, *$ge*, *$gt*), when the `Y_WIDTH` parameter is greater than 1, the output is zero-extended, and only the least significant bit varies.

Division and modulo cells are available in two rounding modes. The original *$div* and *$mod* cells are based on truncating division, and correspond to the semantics of the verilog `/` and `%` operators. The *$divfloor* and *$modfloor* cells represent flooring division and flooring modulo, the latter of which corresponds to the `%` operator in Python. See the following table for a side-by-side comparison between the different semantics.

Table 9.3: Comparison between different rounding modes for division and modulo cells.

Division	Result	Truncating		Flooring	
		$div	$mod	$divfloor	$modfloor
-10 / 3	-3.3	-3	-1	-4	2
10 / -3	-3.3	-3	1	-4	-2
-10 / -3	3.3	3	-1	3	-1
10 / 3	3.3	3	1	3	1

```
yosys> help $add
```

Addition of inputs ‘A’ and ‘B’. This corresponds to the Verilog ‘+’ operator.

Properties

is_evaluable

Simulation model (verilog)

Listing 9.11: simlib.v

```
973 module \$add (A, B, Y);
974
975     parameter A_SIGNED = 0;
976     parameter B_SIGNED = 0;
977     parameter A_WIDTH = 0;
978     parameter B_WIDTH = 0;
979     parameter Y_WIDTH = 0;
980
981     input [A_WIDTH-1:0] A;
982     input [B_WIDTH-1:0] B;
983     output [Y_WIDTH-1:0] Y;
984
985     generate
986         if (A_SIGNED && B_SIGNED) begin:BLOCK1
987             assign Y = $signed(A) + $signed(B);
988         end else begin:BLOCK2
989             assign Y = A + B;
990         end
991     endgenerate
992
993 endmodule
```

yosys> help $and

A bit-wise AND. This corresponds to the Verilog '&' operator.

Properties

is_evaluable

Simulation model (verilog)

Listing 9.12: simlib.v

```
146 module \$and (A, B, Y);
147
148     parameter A_SIGNED = 0;
149     parameter B_SIGNED = 0;
150     parameter A_WIDTH = 0;
151     parameter B_WIDTH = 0;
152     parameter Y_WIDTH = 0;
153
154     input [A_WIDTH-1:0] A;
155     input [B_WIDTH-1:0] B;
156     output [Y_WIDTH-1:0] Y;
157
158     generate
159         if (A_SIGNED && B_SIGNED) begin:BLOCK1
160             assign Y = $signed(A) & $signed(B);
161         end else begin:BLOCK2
162             assign Y = A & B;
163         end
```

(continues on next page)

(continued from previous page)

```
164     endgenerate
165
166 endmodule
```

yosys> help $bweqx

Bit-wise case equality

A bit-wise version of *$eqx*.

Properties

- *is_evaluable*
- *x-aware*

Simulation model (verilog)

Listing 9.13: simlib.v

```
2005 module \$bweqx (A, B, Y);
2006
2007     parameter WIDTH = 0;
2008
2009     input [WIDTH-1:0] A, B;
2010     output [WIDTH-1:0] Y;
2011
2012     genvar i;
2013     generate
2014         for (i = 0; i < WIDTH; i = i + 1) begin:slices
2015             assign Y[i] = A[i] === B[i];
2016         end
2017     endgenerate
2018
2019 endmodule
```

yosys> help $div

Divider

This corresponds to the Verilog '/' operator, performing division and truncating the result (rounding towards 0).

Properties

- *is_evaluable*
- *x-output*

Simulation model (verilog)

Listing 9.14: simlib.v

```
1332 module \$div (A, B, Y);
1333
1334     parameter A_SIGNED = 0;
1335     parameter B_SIGNED = 0;
1336     parameter A_WIDTH = 0;
1337     parameter B_WIDTH = 0;
```

(continues on next page)

(continued from previous page)

```
1338    parameter Y_WIDTH = 0;
1339
1340    input [A_WIDTH-1:0] A;
1341    input [B_WIDTH-1:0] B;
1342    output [Y_WIDTH-1:0] Y;
1343
1344    generate
1345        if (A_SIGNED && B_SIGNED) begin:BLOCK1
1346            assign Y = $signed(A) / $signed(B);
1347        end else begin:BLOCK2
1348            assign Y = A / B;
1349        end
1350    endgenerate
1351
1352 endmodule
```

`yosys> help $divfloor`

Division with floored result (rounded towards negative infinity).

Properties

is_evaluable

Simulation model (verilog)

Listing 9.15: simlib.v

```
1395 module \$divfloor (A, B, Y);
1396
1397    parameter A_SIGNED = 0;
1398    parameter B_SIGNED = 0;
1399    parameter A_WIDTH = 0;
1400    parameter B_WIDTH = 0;
1401    parameter Y_WIDTH = 0;
1402
1403    input [A_WIDTH-1:0] A;
1404    input [B_WIDTH-1:0] B;
1405    output [Y_WIDTH-1:0] Y;
1406
1407    generate
1408        if (A_SIGNED && B_SIGNED) begin:BLOCK1
1409            localparam WIDTH =
1410                    A_WIDTH >= B_WIDTH && A_WIDTH >= Y_WIDTH ? A_WIDTH :
1411                    B_WIDTH >= A_WIDTH && B_WIDTH >= Y_WIDTH ? B_WIDTH : Y_WIDTH;
1412            wire [WIDTH:0] A_buf, B_buf, N_buf;
1413            assign A_buf = $signed(A);
1414            assign B_buf = $signed(B);
1415            assign N_buf = (A[A_WIDTH-1] == B[B_WIDTH-1]) || A == 0 ? A_buf :
↪$signed(A_buf - (B[B_WIDTH-1] ? B_buf+1 : B_buf-1));
1416            assign Y = $signed(N_buf) / $signed(B_buf);
1417        end else begin:BLOCK2
1418            assign Y = A / B;
1419        end
1420    endgenerate
```

(continues on next page)

(continued from previous page)

```
1421
1422 endmodule
```

yosys> help $eq

An equality comparison between inputs 'A' and 'B'. This corresponds to the Verilog '==' operator.

Properties

is_evaluable

Simulation model (verilog)

Listing 9.16: simlib.v

```
782 module \$eq (A, B, Y);
783
784     parameter A_SIGNED = 0;
785     parameter B_SIGNED = 0;
786     parameter A_WIDTH = 0;
787     parameter B_WIDTH = 0;
788     parameter Y_WIDTH = 0;
789
790     input [A_WIDTH-1:0] A;
791     input [B_WIDTH-1:0] B;
792     output [Y_WIDTH-1:0] Y;
793
794     generate
795         if (A_SIGNED && B_SIGNED) begin:BLOCK1
796             assign Y = $signed(A) == $signed(B);
797         end else begin:BLOCK2
798             assign Y = A == B;
799         end
800     endgenerate
801
802 endmodule
```

yosys> help $eqx

Case equality

An exact equality comparison between inputs 'A' and 'B'. Also known as the case equality operator. This corresponds to the Verilog '===' operator. Unlike equality comparison that can give 'x' as output, an exact equality comparison will strictly give '0' or '1' as output, even if input includes 'x' or 'z' values.

Properties

- *is_evaluable*
- *x-aware*

Simulation model (verilog)

Listing 9.17: simlib.v

```
847 module \$eqx (A, B, Y);
848
```

(continues on next page)

(continued from previous page)

```
849     parameter A_SIGNED = 0;
850     parameter B_SIGNED = 0;
851     parameter A_WIDTH = 0;
852     parameter B_WIDTH = 0;
853     parameter Y_WIDTH = 0;
854
855     input [A_WIDTH-1:0] A;
856     input [B_WIDTH-1:0] B;
857     output [Y_WIDTH-1:0] Y;
858
859     generate
860         if (A_SIGNED && B_SIGNED) begin:BLOCK1
861             assign Y = $signed(A) === $signed(B);
862         end else begin:BLOCK2
863             assign Y = A === B;
864         end
865     endgenerate
866
867 endmodule
```

yosys> help $ge

A greater-than-or-equal-to comparison between inputs ‘A’ and ‘B’. This corresponds to the Verilog ‘>=’ operator.

Properties

is_evaluable

Simulation model (verilog)

Listing 9.18: simlib.v

```
910 module \$ge (A, B, Y);
911
912     parameter A_SIGNED = 0;
913     parameter B_SIGNED = 0;
914     parameter A_WIDTH = 0;
915     parameter B_WIDTH = 0;
916     parameter Y_WIDTH = 0;
917
918     input [A_WIDTH-1:0] A;
919     input [B_WIDTH-1:0] B;
920     output [Y_WIDTH-1:0] Y;
921
922     generate
923         if (A_SIGNED && B_SIGNED) begin:BLOCK1
924             assign Y = $signed(A) >= $signed(B);
925         end else begin:BLOCK2
926             assign Y = A >= B;
927         end
928     endgenerate
929
930 endmodule
```

yosys> help $gt

A greater-than comparison between inputs 'A' and 'B'. This corresponds to the Verilog '>' operator.

Properties

is_evaluable

Simulation model (verilog)

Listing 9.19: simlib.v

```
942 module \$gt (A, B, Y);
943
944     parameter A_SIGNED = 0;
945     parameter B_SIGNED = 0;
946     parameter A_WIDTH = 0;
947     parameter B_WIDTH = 0;
948     parameter Y_WIDTH = 0;
949
950     input [A_WIDTH-1:0] A;
951     input [B_WIDTH-1:0] B;
952     output [Y_WIDTH-1:0] Y;
953
954     generate
955         if (A_SIGNED && B_SIGNED) begin:BLOCK1
956             assign Y = $signed(A) > $signed(B);
957         end else begin:BLOCK2
958             assign Y = A > B;
959         end
960     endgenerate
961
962 endmodule
```

yosys> help $le

A less-than-or-equal-to comparison between inputs 'A' and 'B'. This corresponds to the Verilog '<=' operator.

Properties

is_evaluable

Simulation model (verilog)

Listing 9.20: simlib.v

```
750 module \$le (A, B, Y);
751
752     parameter A_SIGNED = 0;
753     parameter B_SIGNED = 0;
754     parameter A_WIDTH = 0;
755     parameter B_WIDTH = 0;
756     parameter Y_WIDTH = 0;
757
758     input [A_WIDTH-1:0] A;
759     input [B_WIDTH-1:0] B;
760     output [Y_WIDTH-1:0] Y;
761
```

(continues on next page)

(continued from previous page)

```
762     generate
763         if (A_SIGNED && B_SIGNED) begin:BLOCK1
764             assign Y = $signed(A) <= $signed(B);
765         end else begin:BLOCK2
766             assign Y = A <= B;
767         end
768     endgenerate
769
770 endmodule
```

yosys> help $logic_and

A logical AND. This corresponds to the Verilog '&&' operator.

Properties

is_evaluable

Simulation model (verilog)

Listing 9.21: simlib.v

```
1541 module \$logic_and (A, B, Y);
1542
1543     parameter A_SIGNED = 0;
1544     parameter B_SIGNED = 0;
1545     parameter A_WIDTH = 0;
1546     parameter B_WIDTH = 0;
1547     parameter Y_WIDTH = 0;
1548
1549     input [A_WIDTH-1:0] A;
1550     input [B_WIDTH-1:0] B;
1551     output [Y_WIDTH-1:0] Y;
1552
1553     generate
1554         if (A_SIGNED && B_SIGNED) begin:BLOCK1
1555             assign Y = $signed(A) && $signed(B);
1556         end else begin:BLOCK2
1557             assign Y = A && B;
1558         end
1559     endgenerate
1560
1561 endmodule
```

yosys> help $logic_or

A logical OR. This corresponds to the Verilog '||' operator.

Properties

is_evaluable

Simulation model (verilog)

Listing 9.22: simlib.v

```
1572 module \$logic_or (A, B, Y);
1573
```

(continues on next page)

(continued from previous page)

```
1574      parameter A_SIGNED = 0;
1575      parameter B_SIGNED = 0;
1576      parameter A_WIDTH = 0;
1577      parameter B_WIDTH = 0;
1578      parameter Y_WIDTH = 0;
1579
1580      input [A_WIDTH-1:0] A;
1581      input [B_WIDTH-1:0] B;
1582      output [Y_WIDTH-1:0] Y;
1583
1584      generate
1585          if (A_SIGNED && B_SIGNED) begin:BLOCK1
1586              assign Y = $signed(A) || $signed(B);
1587          end else begin:BLOCK2
1588              assign Y = A || B;
1589          end
1590      endgenerate
1591
1592  endmodule
```

yosys> help $lt

A less-than comparison between inputs ‘A’ and ‘B’. This corresponds to the Verilog ‘<’ operator.

Properties

is_evaluable

Simulation model (verilog)

Listing 9.23: simlib.v

```
718  module \$lt (A, B, Y);
719
720      parameter A_SIGNED = 0;
721      parameter B_SIGNED = 0;
722      parameter A_WIDTH = 0;
723      parameter B_WIDTH = 0;
724      parameter Y_WIDTH = 0;
725
726      input [A_WIDTH-1:0] A;
727      input [B_WIDTH-1:0] B;
728      output [Y_WIDTH-1:0] Y;
729
730      generate
731          if (A_SIGNED && B_SIGNED) begin:BLOCK1
732              assign Y = $signed(A) < $signed(B);
733          end else begin:BLOCK2
734              assign Y = A < B;
735          end
736      endgenerate
737
738  endmodule
```

yosys> help $mod

Modulo

This corresponds to the Verilog '%' operator, giving the module (or remainder) of division and truncating the result (rounding towards 0).

Invariant: $div(A, B) * B + $mod(A, B) == A

Properties

- *is_evaluable*
- *x-output*

Simulation model (verilog)

Listing 9.24: simlib.v

```
module \$mod (A, B, Y);

    parameter A_SIGNED = 0;
    parameter B_SIGNED = 0;
    parameter A_WIDTH = 0;
    parameter B_WIDTH = 0;
    parameter Y_WIDTH = 0;

    input [A_WIDTH-1:0] A;
    input [B_WIDTH-1:0] B;
    output [Y_WIDTH-1:0] Y;

    generate
        if (A_SIGNED && B_SIGNED) begin:BLOCK1
            assign Y = $signed(A) % $signed(B);
        end else begin:BLOCK2
            assign Y = A % B;
        end
    endgenerate

endmodule
```

yosys> help $modfloor

Modulo/remainder of division with floored result (rounded towards negative infinity).

Invariant: $divfloor(A, B) * B + $modfloor(A, B) == A

Properties

is_evaluable

Simulation model (verilog)

Listing 9.25: simlib.v

```
module \$modfloor (A, B, Y);

    parameter A_SIGNED = 0;
    parameter B_SIGNED = 0;
    parameter A_WIDTH = 0;
    parameter B_WIDTH = 0;
    parameter Y_WIDTH = 0;
```

(continues on next page)

(continued from previous page)

```
1442
1443        input [A_WIDTH-1:0] A;
1444        input [B_WIDTH-1:0] B;
1445        output [Y_WIDTH-1:0] Y;
1446
1447        generate
1448            if (A_SIGNED && B_SIGNED) begin:BLOCK1
1449                localparam WIDTH = B_WIDTH >= Y_WIDTH ? B_WIDTH : Y_WIDTH;
1450                wire [WIDTH-1:0] B_buf, Y_trunc;
1451                assign B_buf = $signed(B);
1452                assign Y_trunc = $signed(A) % $signed(B);
1453                // flooring mod is the same as truncating mod for positive division␣
    ↪results (A and B have
1454                // the same sign), as well as when there's no remainder.
1455                // For all other cases, they behave as `floor - trunc = B`
1456                assign Y = (A[A_WIDTH-1] == B[B_WIDTH-1]) || Y_trunc == 0 ? Y_trunc :
    ↪$signed(B_buf) + $signed(Y_trunc);
1457            end else begin:BLOCK2
1458                // no difference between truncating and flooring for unsigned
1459                assign Y = A % B;
1460            end
1461        endgenerate
1462
1463    endmodule
```

yosys> help $mul

Multiplication of inputs ‘A’ and ‘B’. This corresponds to the Verilog ‘*’ operator.

Properties

is_evaluable

Simulation model (verilog)

Listing 9.26: simlib.v

```
1037    module \$mul (A, B, Y);
1038
1039        parameter A_SIGNED = 0;
1040        parameter B_SIGNED = 0;
1041        parameter A_WIDTH = 0;
1042        parameter B_WIDTH = 0;
1043        parameter Y_WIDTH = 0;
1044
1045        input [A_WIDTH-1:0] A;
1046        input [B_WIDTH-1:0] B;
1047        output [Y_WIDTH-1:0] Y;
1048
1049        generate
1050            if (A_SIGNED && B_SIGNED) begin:BLOCK1
1051                assign Y = $signed(A) * $signed(B);
1052            end else begin:BLOCK2
1053                assign Y = A * B;
1054            end
```

(continues on next page)

(continued from previous page)

```
1055     endgenerate
1056
1057 endmodule
```

yosys> help $ne

An inequality comparison between inputs 'A' and 'B'. This corresponds to the Verilog '!=' operator.

Properties

is_evaluable

Simulation model (verilog)

Listing 9.27: simlib.v

```
814 module \$ne (A, B, Y);
815
816     parameter A_SIGNED = 0;
817     parameter B_SIGNED = 0;
818     parameter A_WIDTH = 0;
819     parameter B_WIDTH = 0;
820     parameter Y_WIDTH = 0;
821
822     input [A_WIDTH-1:0] A;
823     input [B_WIDTH-1:0] B;
824     output [Y_WIDTH-1:0] Y;
825
826     generate
827         if (A_SIGNED && B_SIGNED) begin:BLOCK1
828             assign Y = $signed(A) != $signed(B);
829         end else begin:BLOCK2
830             assign Y = A != B;
831         end
832     endgenerate
833
834 endmodule
```

yosys> help $nex

Case inequality

This corresponds to the Verilog '!==' operator.

Refer to *$eqx* for more details.

Properties

- *is_evaluable*
- *x-aware*

Simulation model (verilog)

Listing 9.28: simlib.v

```
878 module \$nex (A, B, Y);
879
880     parameter A_SIGNED = 0;
```

(continues on next page)

(continued from previous page)

```
881     parameter B_SIGNED = 0;
882     parameter A_WIDTH = 0;
883     parameter B_WIDTH = 0;
884     parameter Y_WIDTH = 0;
885
886     input [A_WIDTH-1:0] A;
887     input [B_WIDTH-1:0] B;
888     output [Y_WIDTH-1:0] Y;
889
890     generate
891         if (A_SIGNED && B_SIGNED) begin:BLOCK1
892             assign Y = $signed(A) !== $signed(B);
893         end else begin:BLOCK2
894             assign Y = A !== B;
895         end
896     endgenerate
897
898 endmodule
```

yosys> help $or

A bit-wise OR. This corresponds to the Verilog '|' operator.

Properties

is_evaluable

Simulation model (verilog)

Listing 9.29: simlib.v

```
177 module \$or (A, B, Y);
178
179     parameter A_SIGNED = 0;
180     parameter B_SIGNED = 0;
181     parameter A_WIDTH = 0;
182     parameter B_WIDTH = 0;
183     parameter Y_WIDTH = 0;
184
185     input [A_WIDTH-1:0] A;
186     input [B_WIDTH-1:0] B;
187     output [Y_WIDTH-1:0] Y;
188
189     generate
190         if (A_SIGNED && B_SIGNED) begin:BLOCK1
191             assign Y = $signed(A) | $signed(B);
192         end else begin:BLOCK2
193             assign Y = A | B;
194         end
195     endgenerate
196
197 endmodule
```

yosys> help $pow

Exponentiation of an input (Y = A ** B). This corresponds to the Verilog '**' operator.

Properties

is_evaluable

Simulation model (verilog)

Listing 9.30: simlib.v

```
1477 module \$pow (A, B, Y);
1478
1479     parameter A_SIGNED = 0;
1480     parameter B_SIGNED = 0;
1481     parameter A_WIDTH = 0;
1482     parameter B_WIDTH = 0;
1483     parameter Y_WIDTH = 0;
1484
1485     input [A_WIDTH-1:0] A;
1486     input [B_WIDTH-1:0] B;
1487     output [Y_WIDTH-1:0] Y;
1488
1489     generate
1490         if (A_SIGNED && B_SIGNED) begin:BLOCK1
1491             assign Y = $signed(A) ** $signed(B);
1492         end else if (A_SIGNED) begin:BLOCK2
1493             assign Y = $signed(A) ** B;
1494         end else if (B_SIGNED) begin:BLOCK3
1495             assign Y = A ** $signed(B);
1496         end else begin:BLOCK4
1497             assign Y = A ** B;
1498         end
1499     endgenerate
1500
1501 endmodule
```

yosys> help **$shift**

Variable shifter

Performs a right logical shift if the second operand is positive (or unsigned), and a left logical shift if it is negative.

Properties

is_evaluable

Simulation model (verilog)

Listing 9.31: simlib.v

```
535 module \$shift (A, B, Y);
536
537     parameter A_SIGNED = 0;
538     parameter B_SIGNED = 0;
539     parameter A_WIDTH = 0;
540     parameter B_WIDTH = 0;
541     parameter Y_WIDTH = 0;
542
543     input [A_WIDTH-1:0] A;
```

(continues on next page)

(continued from previous page)

```
544     input [B_WIDTH-1:0] B;
545     output [Y_WIDTH-1:0] Y;
546
547     generate
548         if (A_SIGNED) begin:BLOCK1
549             if (B_SIGNED) begin:BLOCK2
550                 assign Y = $signed(B) < 0 ? $signed(A) << -B : $signed(A) >> B;
551             end else begin:BLOCK3
552                 assign Y = $signed(A) >> B;
553             end
554         end else begin:BLOCK4
555             if (B_SIGNED) begin:BLOCK5
556                 assign Y = $signed(B) < 0 ? A << -B : A >> B;
557             end else begin:BLOCK6
558                 assign Y = A >> B;
559             end
560         end
561     endgenerate
562
563 endmodule
```

yosys> help **$shiftx**

Indexed part-select

Same as the *$shift* cell, but fills with 'x'.

Properties

- *is_evaluable*
- *x-output*

Simulation model (verilog)

Listing 9.32: simlib.v

```
572 module \$shiftx (A, B, Y);
573
574     parameter A_SIGNED = 0;
575     parameter B_SIGNED = 0;
576     parameter A_WIDTH = 0;
577     parameter B_WIDTH = 0;
578     parameter Y_WIDTH = 0;
579
580     input [A_WIDTH-1:0] A;
581     input [B_WIDTH-1:0] B;
582     output [Y_WIDTH-1:0] Y;
583
584     generate
585         if (Y_WIDTH > 0)
586             if (B_SIGNED) begin:BLOCK1
587                 assign Y = A[$signed(B) +: Y_WIDTH];
588             end else begin:BLOCK2
589                 assign Y = A[B +: Y_WIDTH];
```

(continues on next page)

(continued from previous page)

```
590             end
591     endgenerate
592
593 endmodule
```

yosys> help $shl

A logical shift-left operation. This corresponds to the Verilog '<<' operator.

Properties

is_evaluable

Simulation model (verilog)

Listing 9.33: simlib.v

```
411 module \$shl (A, B, Y);
412
413     parameter A_SIGNED = 0;
414     parameter B_SIGNED = 0;
415     parameter A_WIDTH = 0;
416     parameter B_WIDTH = 0;
417     parameter Y_WIDTH = 0;
418
419     input [A_WIDTH-1:0] A;
420     input [B_WIDTH-1:0] B;
421     output [Y_WIDTH-1:0] Y;
422
423     generate
424         if (A_SIGNED) begin:BLOCK1
425             assign Y = $signed(A) << B;
426         end else begin:BLOCK2
427             assign Y = A << B;
428         end
429     endgenerate
430
431 endmodule
```

yosys> help $shr

A logical shift-right operation. This corresponds to the Verilog '>>' operator.

Properties

is_evaluable

Simulation model (verilog)

Listing 9.34: simlib.v

```
442 module \$shr (A, B, Y);
443
444     parameter A_SIGNED = 0;
445     parameter B_SIGNED = 0;
446     parameter A_WIDTH = 0;
447     parameter B_WIDTH = 0;
448     parameter Y_WIDTH = 0;
```

(continues on next page)

(continued from previous page)

```
449
450     input [A_WIDTH-1:0] A;
451     input [B_WIDTH-1:0] B;
452     output [Y_WIDTH-1:0] Y;
453
454     generate
455         if (A_SIGNED) begin:BLOCK1
456             assign Y = $signed(A) >> B;
457         end else begin:BLOCK2
458             assign Y = A >> B;
459         end
460     endgenerate
461
462 endmodule
```

yosys> help $sshl

An arithmatic shift-left operation. This corresponds to the Verilog '<<<' operator.

Properties

is_evaluable

Simulation model (verilog)

Listing 9.35: simlib.v

```
474 module \$sshl (A, B, Y);
475
476     parameter A_SIGNED = 0;
477     parameter B_SIGNED = 0;
478     parameter A_WIDTH = 0;
479     parameter B_WIDTH = 0;
480     parameter Y_WIDTH = 0;
481
482     input [A_WIDTH-1:0] A;
483     input [B_WIDTH-1:0] B;
484     output [Y_WIDTH-1:0] Y;
485
486     generate
487         if (A_SIGNED) begin:BLOCK1
488             assign Y = $signed(A) <<< B;
489         end else begin:BLOCK2
490             assign Y = A <<< B;
491         end
492     endgenerate
493
494 endmodule
```

yosys> help $sshr

An arithmatic shift-right operation. This corresponds to the Verilog '>>>' operator.

Properties

is_evaluable

Simulation model (verilog)

Listing 9.36: simlib.v

```
506 module \$sshr (A, B, Y);
507
508     parameter A_SIGNED = 0;
509     parameter B_SIGNED = 0;
510     parameter A_WIDTH = 0;
511     parameter B_WIDTH = 0;
512     parameter Y_WIDTH = 0;
513
514     input [A_WIDTH-1:0] A;
515     input [B_WIDTH-1:0] B;
516     output [Y_WIDTH-1:0] Y;
517
518     generate
519         if (A_SIGNED) begin:BLOCK1
520             assign Y = $signed(A) >>> B;
521         end else begin:BLOCK2
522             assign Y = A >>> B;
523         end
524     endgenerate
525
526 endmodule
```

yosys> help $sub

Subtraction between inputs 'A' and 'B'. This corresponds to the Verilog '-' operator.

Properties

is_evaluable

Simulation model (verilog)

Listing 9.37: simlib.v

```
1005 module \$sub (A, B, Y);
1006
1007     parameter A_SIGNED = 0;
1008     parameter B_SIGNED = 0;
1009     parameter A_WIDTH = 0;
1010     parameter B_WIDTH = 0;
1011     parameter Y_WIDTH = 0;
1012
1013     input [A_WIDTH-1:0] A;
1014     input [B_WIDTH-1:0] B;
1015     output [Y_WIDTH-1:0] Y;
1016
1017     generate
1018         if (A_SIGNED && B_SIGNED) begin:BLOCK1
1019             assign Y = $signed(A) - $signed(B);
1020         end else begin:BLOCK2
1021             assign Y = A - B;
1022         end
1023     endgenerate
1024
```

(continues on next page)

(continued from previous page)

```
1025 endmodule
```

yosys> help $xnor

A bit-wise XNOR. This corresponds to the Verilog '~^' operator.

Properties

is_evaluable

Simulation model (verilog)

Listing 9.38: simlib.v

```
239 module \$xnor (A, B, Y);
240
241     parameter A_SIGNED = 0;
242     parameter B_SIGNED = 0;
243     parameter A_WIDTH = 0;
244     parameter B_WIDTH = 0;
245     parameter Y_WIDTH = 0;
246
247     input [A_WIDTH-1:0] A;
248     input [B_WIDTH-1:0] B;
249     output [Y_WIDTH-1:0] Y;
250
251     generate
252         if (A_SIGNED && B_SIGNED) begin:BLOCK1
253             assign Y = $signed(A) ~^ $signed(B);
254         end else begin:BLOCK2
255             assign Y = A ~^ B;
256         end
257     endgenerate
258
259 endmodule
```

yosys> help $xor

A bit-wise XOR. This corresponds to the Verilog '^' operator.

Properties

is_evaluable

Simulation model (verilog)

Listing 9.39: simlib.v

```
208 module \$xor (A, B, Y);
209
210     parameter A_SIGNED = 0;
211     parameter B_SIGNED = 0;
212     parameter A_WIDTH = 0;
213     parameter B_WIDTH = 0;
214     parameter Y_WIDTH = 0;
215
216     input [A_WIDTH-1:0] A;
217     input [B_WIDTH-1:0] B;
```

(continues on next page)

(continued from previous page)

```
218     output [Y_WIDTH-1:0] Y;
219
220     generate
221         if (A_SIGNED && B_SIGNED) begin:BLOCK1
222             assign Y = $signed(A) ^ $signed(B);
223         end else begin:BLOCK2
224             assign Y = A ^ B;
225         end
226     endgenerate
227
228 endmodule
```

9.1.3 Multiplexers

Multiplexers are generated by the Verilog HDL frontend for `?:`-expressions. Multiplexers are also generated by the proc pass to map the decision trees from RTLIL::Process objects to logic.

The simplest multiplexer cell type is *`$mux`*. Cells of this type have a `WITDH` parameter and data inputs `A` and `B` and a data output `Y`, all of the specified width. This cell also has a single bit control input `S`. If `S` is 0 the value from the input `A` is sent to the output, if it is 1 the value from the `B` input is sent to the output. So the *`$mux`* cell implements the function `Y = S ? B : A`.

The *`$pmux`* cell is used to multiplex between many inputs using a one-hot select signal. Cells of this type have a `WIDTH` and a `S_WIDTH` parameter and inputs `A`, `B`, and `S` and an output `Y`. The `S` input is `S_WIDTH` bits wide. The `A` input and the output are both `WIDTH` bits wide and the `B` input is `WIDTH*S_WIDTH` bits wide. When all bits of `S` are zero, the value from `A` input is sent to the output. If the n'th bit from `S` is set, the value n'th `WIDTH` bits wide slice of the `B` input is sent to the output. When more than one bit from `S` is set the output is undefined. Cells of this type are used to model "parallel cases" (defined by using the `parallel_case` attribute or detected by an optimization).

The *`$tribuf`* cell is used to implement tristate logic. Cells of this type have a `WIDTH` parameter and inputs `A` and `EN` and an output `Y`. The `A` input and `Y` output are `WIDTH` bits wide, and the `EN` input is one bit wide. When `EN` is 0, the output is not driven. When `EN` is 1, the value from `A` input is sent to the `Y` output. Therefore, the *`$tribuf`* cell implements the function `Y = EN ? A : 'bz`.

Behavioural code with cascaded if-then-else- and case-statements usually results in trees of multiplexer cells. Many passes (from various optimizations to FSM extraction) heavily depend on these multiplexer trees to understand dependencies between signals. Therefore optimizations should not break these multiplexer trees (e.g. by replacing a multiplexer between a calculated signal and a constant zero with an *`$and`* gate).

```
yosys> help $bmux
```

Binary-encoded multiplexer

Selects between 'slices' of A where each value of S corresponds to a unique slice.

Properties

`is_evaluable`

Simulation model (verilog)

Listing 9.40: simlib.v

```
1658 module \$bmux (A, S, Y);
1659
```

(continues on next page)

(continued from previous page)

```
1660     parameter WIDTH = 0;
1661     parameter S_WIDTH = 0;
1662
1663     input [(WIDTH << S_WIDTH)-1:0] A;
1664     input [S_WIDTH-1:0] S;
1665     output [WIDTH-1:0] Y;
1666
1667     wire [WIDTH-1:0] bm0_out, bm1_out;
1668
1669     generate
1670         if (S_WIDTH > 1) begin:muxlogic
1671             \$bmux #(.WIDTH(WIDTH), .S_WIDTH(S_WIDTH-1)) bm0 (.A(A[(WIDTH << (S_
    ↪WIDTH - 1))-1:0]), .S(S[S_WIDTH-2:0]), .Y(bm0_out));
1672             \$bmux #(.WIDTH(WIDTH), .S_WIDTH(S_WIDTH-1)) bm1 (.A(A[(WIDTH << S_
    ↪WIDTH)-1:WIDTH << (S_WIDTH - 1)]), .S(S[S_WIDTH-2:0]), .Y(bm1_out));
1673             assign Y = S[S_WIDTH-1] ? bm1_out : bm0_out;
1674         end else if (S_WIDTH == 1) begin:simple
1675             assign Y = S ? A[2*WIDTH-1:WIDTH] : A[WIDTH-1:0];
1676         end else begin:passthru
1677             assign Y = A;
1678         end
1679     endgenerate
1680
1681 endmodule
```

```
yosys> help $bwmux
```

Bit-wise multiplexer

Equivalent to a series of 1-bit wide *$mux* cells.

Properties

is_evaluable

Simulation model (verilog)

Listing 9.41: simlib.v

```
2027 module \$bwmux (A, B, S, Y);
2028
2029     parameter WIDTH = 0;
2030
2031     input [WIDTH-1:0] A, B;
2032     input [WIDTH-1:0] S;
2033     output [WIDTH-1:0] Y;
2034
2035     genvar i;
2036     generate
2037         for (i = 0; i < WIDTH; i = i + 1) begin:slices
2038             assign Y[i] = S[i] ? B[i] : A[i];
2039         end
2040     endgenerate
2041
2042 endmodule
```

yosys> help $demux

Demultiplexer i.e routing single input to several outputs based on select signal. Unselected outputs are driven to zero.

Properties

is_evaluable

Simulation model (verilog)

Listing 9.42: simlib.v

```
1733 module \$demux (A, S, Y);
1734
1735     parameter WIDTH = 1;
1736     parameter S_WIDTH = 1;
1737
1738     input [WIDTH-1:0] A;
1739     input [S_WIDTH-1:0] S;
1740     output [(WIDTH << S_WIDTH)-1:0] Y;
1741
1742     genvar i;
1743     generate
1744         for (i = 0; i < (1 << S_WIDTH); i = i + 1) begin:slices
1745             assign Y[i*WIDTH+:WIDTH] = (S == i) ? A : 0;
1746         end
1747     endgenerate
1748
1749 endmodule
```

yosys> help $mux

Multiplexer i.e selecting between two inputs based on select signal.

Properties

is_evaluable

Simulation model (verilog)

Listing 9.43: simlib.v

```
1639 module \$mux (A, B, S, Y);
1640
1641     parameter WIDTH = 0;
1642
1643     input [WIDTH-1:0] A, B;
1644     input S;
1645     output [WIDTH-1:0] Y;
1646
1647     assign Y = S ? B : A;
1648
1649 endmodule
```

yosys> help $pmux

Priority-encoded multiplexer

Selects between 'slices' of B where each slice corresponds to a single bit of S. Outputs A when all bits of S are low.

Properties

- *is_evaluable*
- *x-output*

`Simulation model (verilog)`

Listing 9.44: simlib.v

```
module \$pmux (A, B, S, Y);

    parameter WIDTH = 0;
    parameter S_WIDTH = 0;

    input [WIDTH-1:0] A;
    input [WIDTH*S_WIDTH-1:0] B;
    input [S_WIDTH-1:0] S;
    output reg [WIDTH-1:0] Y;

    integer i;
    reg found_active_sel_bit;

    always @* begin
        Y = A;
        found_active_sel_bit = 0;
        for (i = 0; i < S_WIDTH; i = i+1)
            case (S[i])
                1'b1: begin
                    Y = found_active_sel_bit ? 'bx : B >> (WIDTH*i);
                    found_active_sel_bit = 1;
                end
                1'b0: ;
                1'bx: begin
                    Y = 'bx;
                    found_active_sel_bit = 'bx;
                end
            endcase
    end

endmodule
```

`yosys> help $tribuf`

A tri-state buffer. This buffer conditionally drives the output with the value of the input based on the enable signal.

Properties

is_evaluable

`Simulation model (verilog)`

Listing 9.45: simlib.v

```
module \$tribuf (A, EN, Y);

    parameter WIDTH = 0;
```

(continues on next page)

(continued from previous page)

```
1811
1812        input [WIDTH-1:0] A;
1813        input EN;
1814        output [WIDTH-1:0] Y;
1815
1816        assign Y = EN ? A : 'bz;
1817
1818    endmodule
```

9.1.4 Registers

SR-type latches are represented by *$sr* cells. These cells have input ports SET and CLR and an output port Q. They have the following parameters:

WIDTH
: The width of inputs SET and CLR and output Q.

SET_POLARITY
: The set input bits are active-high if this parameter has the value 1'b1 and active-low if this parameter is 1'b0.

CLR_POLARITY
: The reset input bits are active-high if this parameter has the value 1'b1 and active-low if this parameter is 1'b0.

Both set and reset inputs have separate bits for every output bit. When both the set and reset inputs of an *$sr* cell are active for a given bit index, the reset input takes precedence.

D-type flip-flops are represented by *$dff* cells. These cells have a clock port CLK, an input port D and an output port Q. The following parameters are available for *$dff* cells:

WIDTH
: The width of input D and output Q.

CLK_POLARITY
: Clock is active on the positive edge if this parameter has the value 1'b1 and on the negative edge if this parameter is 1'b0.

D-type flip-flops with asynchronous reset are represented by *$adff* cells. As the *$dff* cells they have CLK, D and Q ports. In addition they also have a single-bit ARST input port for the reset pin and the following additional two parameters:

ARST_POLARITY
: The asynchronous reset is active-high if this parameter has the value 1'b1 and active-low if this parameter is 1'b0.

ARST_VALUE
: The state of Q will be set to this value when the reset is active.

Usually these cells are generated by the *proc* pass using the information in the designs RTLIL::Process objects.

D-type flip-flops with synchronous reset are represented by *$sdff* cells. As the *$dff* cells they have CLK, D and Q ports. In addition they also have a single-bit SRST input port for the reset pin and the following additional two parameters:

SRST_POLARITY
: The synchronous reset is active-high if this parameter has the value 1'b1 and active-low if this parameter is 1'b0.

SRST_VALUE
: The state of Q will be set to this value when the reset is active.

Note that the *$adff* and *$sdff* cells can only be used when the reset value is constant.

D-type flip-flops with asynchronous load are represented by *$aldff* cells. As the *$dff* cells they have CLK, D and Q ports. In addition they also have a single-bit ALOAD input port for the async load enable pin, a AD input port with the same width as data for the async load data, and the following additional parameter:

ALOAD_POLARITY
: The asynchronous load is active-high if this parameter has the value 1'b1 and active-low if this parameter is 1'b0.

D-type flip-flops with asynchronous set and reset are represented by *$dffsr* cells. As the *$dff* cells they have CLK, D and Q ports. In addition they also have multi-bit SET and CLR input ports and the corresponding polarity parameters, like *$sr* cells.

D-type flip-flops with enable are represented by *$dffe*, *$adffe*, *$aldffe*, *$dffsre*, *$sdffe*, and *$sdffce* cells, which are enhanced variants of *$dff*, *$adff*, *$aldff*, *$dffsr*, *$sdff* (with reset over enable) and *$sdff* (with enable over reset) cells, respectively. They have the same ports and parameters as their base cell. In addition they also have a single-bit EN input port for the enable pin and the following parameter:

EN_POLARITY
: The enable input is active-high if this parameter has the value 1'b1 and active-low if this parameter is 1'b0.

D-type latches are represented by *$dlatch* cells. These cells have an enable port EN, an input port D, and an output port Q. The following parameters are available for *$dlatch* cells:

WIDTH
: The width of input D and output Q.

EN_POLARITY
: The enable input is active-high if this parameter has the value 1'b1 and active-low if this parameter is 1'b0.

The latch is transparent when the EN input is active.

D-type latches with reset are represented by *$adlatch* cells. In addition to *$dlatch* ports and parameters, they also have a single-bit ARST input port for the reset pin and the following additional parameters:

ARST_POLARITY
: The asynchronous reset is active-high if this parameter has the value 1'b1 and active-low if this parameter is 1'b0.

ARST_VALUE
: The state of Q will be set to this value when the reset is active.

D-type latches with set and reset are represented by *$dlatchsr* cells. In addition to *$dlatch* ports and parameters, they also have multi-bit SET and CLR input ports and the corresponding polarity parameters, like *$sr* cells.

```
yosys> help $adff

    Simulation model (verilog)
```

Listing 9.46: simlib.v

```
module \$adff (CLK, ARST, D, Q);

    parameter WIDTH = 0;
    parameter CLK_POLARITY = 1'b1;
    parameter ARST_POLARITY = 1'b1;
    parameter ARST_VALUE = 0;

    input CLK, ARST;
    input [WIDTH-1:0] D;
    output reg [WIDTH-1:0] Q;
    wire pos_clk = CLK == CLK_POLARITY;
    wire pos_arst = ARST == ARST_POLARITY;

    always @(posedge pos_clk, posedge pos_arst) begin
        if (pos_arst)
            Q <= ARST_VALUE;
        else
            Q <= D;
    end

endmodule
```

```
yosys> help $adffe
```

Simulation model (verilog)

Listing 9.47: simlib.v

```
module \$adffe (CLK, ARST, EN, D, Q);

    parameter WIDTH = 0;
    parameter CLK_POLARITY = 1'b1;
    parameter EN_POLARITY = 1'b1;
    parameter ARST_POLARITY = 1'b1;
    parameter ARST_VALUE = 0;

    input CLK, ARST, EN;
    input [WIDTH-1:0] D;
    output reg [WIDTH-1:0] Q;
    wire pos_clk = CLK == CLK_POLARITY;
    wire pos_arst = ARST == ARST_POLARITY;

    always @(posedge pos_clk, posedge pos_arst) begin
        if (pos_arst)
            Q <= ARST_VALUE;
        else if (EN == EN_POLARITY)
            Q <= D;
    end

endmodule
```

```
yosys> help $adlatch
```

Simulation model (verilog)

Listing 9.48: simlib.v

```
2623 module \$adlatch (EN, ARST, D, Q);
2624
2625     parameter WIDTH = 0;
2626     parameter EN_POLARITY = 1'b1;
2627     parameter ARST_POLARITY = 1'b1;
2628     parameter ARST_VALUE = 0;
2629
2630     input EN, ARST;
2631     input [WIDTH-1:0] D;
2632     output reg [WIDTH-1:0] Q;
2633
2634     always @* begin
2635         if (ARST == ARST_POLARITY)
2636             Q = ARST_VALUE;
2637         else if (EN == EN_POLARITY)
2638             Q = D;
2639     end
2640
2641 endmodule
```

yosys> help $aldff

Simulation model (verilog)

Listing 9.49: simlib.v

```
2448 module \$aldff (CLK, ALOAD, AD, D, Q);
2449
2450     parameter WIDTH = 0;
2451     parameter CLK_POLARITY = 1'b1;
2452     parameter ALOAD_POLARITY = 1'b1;
2453
2454     input CLK, ALOAD;
2455     input [WIDTH-1:0] AD;
2456     input [WIDTH-1:0] D;
2457     output reg [WIDTH-1:0] Q;
2458     wire pos_clk = CLK == CLK_POLARITY;
2459     wire pos_aload = ALOAD == ALOAD_POLARITY;
2460
2461     always @(posedge pos_clk, posedge pos_aload) begin
2462         if (pos_aload)
2463             Q <= AD;
2464         else
2465             Q <= D;
2466     end
2467
2468 endmodule
```

yosys> help $aldffe

Simulation model (verilog)

Listing 9.50: simlib.v

```
2524 module \$aldffe (CLK, ALOAD, AD, EN, D, Q);
2525
2526     parameter WIDTH = 0;
2527     parameter CLK_POLARITY = 1'b1;
2528     parameter EN_POLARITY = 1'b1;
2529     parameter ALOAD_POLARITY = 1'b1;
2530
2531     input CLK, ALOAD, EN;
2532     input [WIDTH-1:0] D;
2533     input [WIDTH-1:0] AD;
2534     output reg [WIDTH-1:0] Q;
2535     wire pos_clk = CLK == CLK_POLARITY;
2536     wire pos_aload = ALOAD == ALOAD_POLARITY;
2537
2538     always @(posedge pos_clk, posedge pos_aload) begin
2539         if (pos_aload)
2540             Q <= AD;
2541         else if (EN == EN_POLARITY)
2542             Q <= D;
2543     end
2544
2545 endmodule
```

yosys> help $dff

Simulation model (verilog)

Listing 9.51: simlib.v

```
2315 module \$dff (CLK, D, Q);
2316
2317     parameter WIDTH = 0;
2318     parameter CLK_POLARITY = 1'b1;
2319
2320     input CLK;
2321     input [WIDTH-1:0] D;
2322     output reg [WIDTH-1:0] Q;
2323     wire pos_clk = CLK == CLK_POLARITY;
2324
2325     always @(posedge pos_clk) begin
2326         Q <= D;
2327     end
2328
2329 endmodule
```

yosys> help $dffe

Simulation model (verilog)

Listing 9.52: simlib.v

```
module \$dffe (CLK, EN, D, Q);

    parameter WIDTH = 0;
    parameter CLK_POLARITY = 1'b1;
    parameter EN_POLARITY = 1'b1;

    input CLK, EN;
    input [WIDTH-1:0] D;
    output reg [WIDTH-1:0] Q;
    wire pos_clk = CLK == CLK_POLARITY;

    always @(posedge pos_clk) begin
        if (EN == EN_POLARITY) Q <= D;
    end

endmodule
```

yosys> help $dffsr

Simulation model (verilog)

Listing 9.53: simlib.v

```
module \$dffsr (CLK, SET, CLR, D, Q);

    parameter WIDTH = 0;
    parameter CLK_POLARITY = 1'b1;
    parameter SET_POLARITY = 1'b1;
    parameter CLR_POLARITY = 1'b1;

    input CLK;
    input [WIDTH-1:0] SET, CLR, D;
    output reg [WIDTH-1:0] Q;

    wire pos_clk = CLK == CLK_POLARITY;
    wire [WIDTH-1:0] pos_set = SET_POLARITY ? SET : ~SET;
    wire [WIDTH-1:0] pos_clr = CLR_POLARITY ? CLR : ~CLR;

    genvar i;
    generate
        for (i = 0; i < WIDTH; i = i+1) begin:bitslices
            always @(posedge pos_set[i], posedge pos_clr[i], posedge pos_clk)
                if (pos_clr[i])
                    Q[i] <= 0;
                else if (pos_set[i])
                    Q[i] <= 1;
                else
                    Q[i] <= D[i];
        end
    endgenerate

```

(continues on next page)

(continued from previous page)

```
endmodule
```

```
yosys> help $dffsre
```

Simulation model (verilog)

Listing 9.54: simlib.v

```
module \$dffsre (CLK, SET, CLR, EN, D, Q);

    parameter WIDTH = 0;
    parameter CLK_POLARITY = 1'b1;
    parameter SET_POLARITY = 1'b1;
    parameter CLR_POLARITY = 1'b1;
    parameter EN_POLARITY = 1'b1;

    input CLK, EN;
    input [WIDTH-1:0] SET, CLR, D;
    output reg [WIDTH-1:0] Q;

    wire pos_clk = CLK == CLK_POLARITY;
    wire [WIDTH-1:0] pos_set = SET_POLARITY ? SET : ~SET;
    wire [WIDTH-1:0] pos_clr = CLR_POLARITY ? CLR : ~CLR;

    genvar i;
    generate
        for (i = 0; i < WIDTH; i = i+1) begin:bitslices
            always @(posedge pos_set[i], posedge pos_clr[i], posedge pos_clk)
                if (pos_clr[i])
                    Q[i] <= 0;
                else if (pos_set[i])
                    Q[i] <= 1;
                else if (EN == EN_POLARITY)
                    Q[i] <= D[i];
        end
    endgenerate

endmodule
```

```
yosys> help $dlatch
```

Simulation model (verilog)

Listing 9.55: simlib.v

```
module \$dlatch (EN, D, Q);

    parameter WIDTH = 0;
    parameter EN_POLARITY = 1'b1;

    input EN;
    input [WIDTH-1:0] D;
    output reg [WIDTH-1:0] Q;
```

(continues on next page)

(continued from previous page)

```
2612
2613        always @* begin
2614            if (EN == EN_POLARITY)
2615                Q = D;
2616        end
2617
2618    endmodule
```

```
yosys> help $dlatchsr
```

Simulation model (verilog)

Listing 9.56: simlib.v

```
2647    module \$dlatchsr (EN, SET, CLR, D, Q);
2648
2649        parameter WIDTH = 0;
2650        parameter EN_POLARITY = 1'b1;
2651        parameter SET_POLARITY = 1'b1;
2652        parameter CLR_POLARITY = 1'b1;
2653
2654        input EN;
2655        input [WIDTH-1:0] SET, CLR, D;
2656        output reg [WIDTH-1:0] Q;
2657
2658        wire pos_en = EN == EN_POLARITY;
2659        wire [WIDTH-1:0] pos_set = SET_POLARITY ? SET : ~SET;
2660        wire [WIDTH-1:0] pos_clr = CLR_POLARITY ? CLR : ~CLR;
2661
2662        genvar i;
2663        generate
2664            for (i = 0; i < WIDTH; i = i+1) begin:bitslices
2665                always @*
2666                    if (pos_clr[i])
2667                        Q[i] = 0;
2668                    else if (pos_set[i])
2669                        Q[i] = 1;
2670                    else if (pos_en)
2671                        Q[i] = D[i];
2672            end
2673        endgenerate
2674
2675    endmodule
```

```
yosys> help $sdff
```

Simulation model (verilog)

Listing 9.57: simlib.v

```
2473    module \$sdff (CLK, SRST, D, Q);
2474
2475        parameter WIDTH = 0;
```

(continues on next page)

(continued from previous page)

```
2476     parameter CLK_POLARITY = 1'b1;
2477     parameter SRST_POLARITY = 1'b1;
2478     parameter SRST_VALUE = 0;
2479
2480     input CLK, SRST;
2481     input [WIDTH-1:0] D;
2482     output reg [WIDTH-1:0] Q;
2483     wire pos_clk = CLK == CLK_POLARITY;
2484     wire pos_srst = SRST == SRST_POLARITY;
2485
2486     always @(posedge pos_clk) begin
2487         if (pos_srst)
2488             Q <= SRST_VALUE;
2489         else
2490             Q <= D;
2491     end
2492
2493 endmodule
```

```
yosys> help $sdffce

    Simulation model (verilog)
```

Listing 9.58: simlib.v

```
2576 module \$sdffce (CLK, SRST, EN, D, Q);
2577
2578     parameter WIDTH = 0;
2579     parameter CLK_POLARITY = 1'b1;
2580     parameter EN_POLARITY = 1'b1;
2581     parameter SRST_POLARITY = 1'b1;
2582     parameter SRST_VALUE = 0;
2583
2584     input CLK, SRST, EN;
2585     input [WIDTH-1:0] D;
2586     output reg [WIDTH-1:0] Q;
2587     wire pos_clk = CLK == CLK_POLARITY;
2588     wire pos_srst = SRST == SRST_POLARITY;
2589
2590     always @(posedge pos_clk) begin
2591         if (EN == EN_POLARITY) begin
2592             if (pos_srst)
2593                 Q <= SRST_VALUE;
2594             else
2595                 Q <= D;
2596         end
2597     end
2598
2599 endmodule
```

```
yosys> help $sdffe

    Simulation model (verilog)
```

Listing 9.59: simlib.v

```
2550 module \$sdffe (CLK, SRST, EN, D, Q);
2551
2552     parameter WIDTH = 0;
2553     parameter CLK_POLARITY = 1'b1;
2554     parameter EN_POLARITY = 1'b1;
2555     parameter SRST_POLARITY = 1'b1;
2556     parameter SRST_VALUE = 0;
2557
2558     input CLK, SRST, EN;
2559     input [WIDTH-1:0] D;
2560     output reg [WIDTH-1:0] Q;
2561     wire pos_clk = CLK == CLK_POLARITY;
2562     wire pos_srst = SRST == SRST_POLARITY;
2563
2564     always @(posedge pos_clk) begin
2565         if (pos_srst)
2566             Q <= SRST_VALUE;
2567         else if (EN == EN_POLARITY)
2568             Q <= D;
2569     end
2570
2571 endmodule
```

```
yosys> help $sr

    Simulation model (verilog)
```

Listing 9.60: simlib.v

```
2265 module \$sr (SET, CLR, Q);
2266
2267     parameter WIDTH = 0;
2268     parameter SET_POLARITY = 1'b1;
2269     parameter CLR_POLARITY = 1'b1;
2270
2271     input [WIDTH-1:0] SET, CLR;
2272     output reg [WIDTH-1:0] Q;
2273
2274     wire [WIDTH-1:0] pos_set = SET_POLARITY ? SET : ~SET;
2275     wire [WIDTH-1:0] pos_clr = CLR_POLARITY ? CLR : ~CLR;
2276
2277     genvar i;
2278     generate
2279         for (i = 0; i < WIDTH; i = i+1) begin:bitslices
2280             always @*
2281                 if (pos_clr[i])
2282                     Q[i] <= 0;
2283                 else if (pos_set[i])
2284                     Q[i] <= 1;
2285         end
2286     endgenerate
```

(continues on next page)

(continued from previous page)

```
2287
2288 endmodule
```

9.1.5 Memories

Memories are either represented using `RTLIL::Memory` objects, *`$memrd_v2`*, *`$memwr_v2`*, and *`$meminit_v2`* cells, or by *`$mem_v2`* cells alone.

In the first alternative the `RTLIL::Memory` objects hold the general metadata for the memory (bit width, size in number of words, etc.) and for each port a *`$memrd_v2`* (read port) or *`$memwr_v2`* (write port) cell is created. Having individual cells for read and write ports has the advantage that they can be consolidated using resource sharing passes. In some cases this drastically reduces the number of required ports on the memory cell. In this alternative, memory initialization data is represented by *`$meminit_v2`* cells, which allow delaying constant folding for initialization addresses and data until after the frontend finishes.

The *`$memrd_v2`* cells have a clock input `CLK`, an enable input `EN`, an address input `ADDR`, a data output `DATA`, an asynchronous reset input `ARST`, and a synchronous reset input `SRST`. They also have the following parameters:

`MEMID`
: The name of the `RTLIL::Memory` object that is associated with this read port.

`ABITS`
: The number of address bits (width of the `ADDR` input port).

`WIDTH`
: The number of data bits (width of the `DATA` output port). Note that this may be a power-of-two multiple of the underlying memory's width – such ports are called wide ports and access an aligned group of cells at once. In this case, the corresponding low bits of `ADDR` must be tied to 0.

`CLK_ENABLE`
: When this parameter is non-zero, the clock is used. Otherwise this read port is asynchronous and the `CLK` input is not used.

`CLK_POLARITY`
: Clock is active on the positive edge if this parameter has the value `1'b1` and on the negative edge if this parameter is `1'b0`.

`TRANSPARENCY_MASK`
: This parameter is a bitmask of write ports that this read port is transparent with. The bits of this parameter are indexed by the write port's `PORTID` parameter. Transparency can only be enabled between synchronous ports sharing a clock domain. When transparency is enabled for a given port pair, a read and write to the same address in the same cycle will return the new value. Otherwise the old value is returned.

`COLLISION_X_MASK`
: This parameter is a bitmask of write ports that have undefined collision behavior with this port. The bits of this parameter are indexed by the write port's `PORTID` parameter. This behavior can only be enabled between synchronous ports sharing a clock domain. When undefined collision is enabled for a given port pair, a read and write to the same address in the same cycle will return the undefined (all-X) value.This option is exclusive (for a given port pair) with the transparency option.

`ARST_VALUE`
: Whenever the `ARST` input is asserted, the data output will be reset to this value. Only used for synchronous ports.

`SRST_VALUE`
: Whenever the `SRST` input is synchronously asserted, the data output will be reset to this value. Only

used for synchronous ports.

`INIT_VALUE`
: The initial value of the data output, for synchronous ports.

`CE_OVER_SRST`
: If this parameter is non-zero, the `SRST` input is only recognized when `EN` is true. Otherwise, `SRST` is recognized regardless of `EN`.

The *$memwr_v2* cells have a clock input `CLK`, an enable input `EN` (one enable bit for each data bit), an address input `ADDR` and a data input `DATA`. They also have the following parameters:

`MEMID`
: The name of the `RTLIL::Memory` object that is associated with this write port.

`ABITS`
: The number of address bits (width of the `ADDR` input port).

`WIDTH`
: The number of data bits (width of the `DATA` output port). Like with *$memrd_v2* cells, the width is allowed to be any power-of-two multiple of memory width, with the corresponding restriction on address.

`CLK_ENABLE`
: When this parameter is non-zero, the clock is used. Otherwise this write port is asynchronous and the `CLK` input is not used.

`CLK_POLARITY`
: Clock is active on positive edge if this parameter has the value `1'b1` and on the negative edge if this parameter is `1'b0`.

`PORTID`
: An identifier for this write port, used to index write port bit mask parameters.

`PRIORITY_MASK`
: This parameter is a bitmask of write ports that this write port has priority over in case of writing to the same address. The bits of this parameter are indexed by the other write port's `PORTID` parameter. Write ports can only have priority over write ports with lower port ID. When two ports write to the same address and neither has priority over the other, the result is undefined. Priority can only be set between two synchronous ports sharing the same clock domain.

The *$meminit_v2* cells have an address input `ADDR`, a data input `DATA`, with the width of the `DATA` port equal to `WIDTH` parameter times `WORDS` parameter, and a bit enable mask input `EN` with width equal to `WIDTH` parameter. All three of the inputs must resolve to a constant for synthesis to succeed.

`MEMID`
: The name of the `RTLIL::Memory` object that is associated with this initialization cell.

`ABITS`
: The number of address bits (width of the `ADDR` input port).

`WIDTH`
: The number of data bits per memory location.

`WORDS`
: The number of consecutive memory locations initialized by this cell.

`PRIORITY`
: The cell with the higher integer value in this parameter wins an initialization conflict.

The HDL frontend models a memory using `RTLIL::Memory` objects and asynchronous *$memrd_v2* and *$memwr_v2* cells. The *memory* pass (i.e. its various sub-passes) migrates *$dff* cells into the *$memrd_v2*

and *$memwr_v2* cells making them synchronous, then converts them to a single *$mem_v2* cell and (optionally) maps this cell type to *$dff* cells for the individual words and multiplexer-based address decoders for the read and write interfaces. When the last step is disabled or not possible, a *$mem_v2* cell is left in the design.

The *$mem_v2* cell provides the following parameters:

`MEMID`
: The name of the original `RTLIL::Memory` object that became this *$mem_v2* cell.

`SIZE`
: The number of words in the memory.

`ABITS`
: The number of address bits.

`WIDTH`
: The number of data bits per word.

`INIT`
: The initial memory contents.

`RD_PORTS`
: The number of read ports on this memory cell.

`RD_WIDE_CONTINUATION`
: This parameter is `RD_PORTS` bits wide, containing a bitmask of "wide continuation" read ports. Such ports are used to represent the extra data bits of wide ports in the combined cell, and must have all control signals identical with the preceding port, except for address, which must have the proper sub-cell address encoded in the low bits.

`RD_CLK_ENABLE`
: This parameter is `RD_PORTS` bits wide, containing a clock enable bit for each read port.

`RD_CLK_POLARITY`
: This parameter is `RD_PORTS` bits wide, containing a clock polarity bit for each read port.

`RD_TRANSPARENCY_MASK`
: This parameter is `RD_PORTS*WR_PORTS` bits wide, containing a concatenation of all `TRANSPARENCY_MASK` values of the original *$memrd_v2* cells.

`RD_COLLISION_X_MASK`
: This parameter is `RD_PORTS*WR_PORTS` bits wide, containing a concatenation of all `COLLISION_X_MASK` values of the original *$memrd_v2* cells.

`RD_CE_OVER_SRST`
: This parameter is `RD_PORTS` bits wide, determining relative synchronous reset and enable priority for each read port.

`RD_INIT_VALUE`
: This parameter is `RD_PORTS*WIDTH` bits wide, containing the initial value for each synchronous read port.

`RD_ARST_VALUE`
: This parameter is `RD_PORTS*WIDTH` bits wide, containing the asynchronous reset value for each synchronous read port.

`RD_SRST_VALUE`
: This parameter is `RD_PORTS*WIDTH` bits wide, containing the synchronous reset value for each synchronous read port.

`WR_PORTS`
: The number of write ports on this memory cell.

`WR_WIDE_CONTINUATION`
: This parameter is `WR_PORTS` bits wide, containing a bitmask of "wide continuation" write ports.

`WR_CLK_ENABLE`
: This parameter is `WR_PORTS` bits wide, containing a clock enable bit for each write port.

`WR_CLK_POLARITY`
: This parameter is `WR_PORTS` bits wide, containing a clock polarity bit for each write port.

`WR_PRIORITY_MASK`
: This parameter is `WR_PORTS*WR_PORTS` bits wide, containing a concatenation of all `PRIORITY_MASK` values of the original *$memwr_v2* cells.

The *$mem_v2* cell has the following ports:

`RD_CLK`
: This input is `RD_PORTS` bits wide, containing all clock signals for the read ports.

`RD_EN`
: This input is `RD_PORTS` bits wide, containing all enable signals for the read ports.

`RD_ADDR`
: This input is `RD_PORTS*ABITS` bits wide, containing all address signals for the read ports.

`RD_DATA`
: This output is `RD_PORTS*WIDTH` bits wide, containing all data signals for the read ports.

`RD_ARST`
: This input is `RD_PORTS` bits wide, containing all asynchronous reset signals for the read ports.

`RD_SRST`
: This input is `RD_PORTS` bits wide, containing all synchronous reset signals for the read ports.

`WR_CLK`
: This input is `WR_PORTS` bits wide, containing all clock signals for the write ports.

`WR_EN`
: This input is `WR_PORTS*WIDTH` bits wide, containing all enable signals for the write ports.

`WR_ADDR`
: This input is `WR_PORTS*ABITS` bits wide, containing all address signals for the write ports.

`WR_DATA`
: This input is `WR_PORTS*WIDTH` bits wide, containing all data signals for the write ports.

The *memory_collect* pass can be used to convert discrete *$memrd_v2*, *$memwr_v2*, and *$meminit_v2* cells belonging to the same memory to a single *$mem_v2* cell, whereas the *memory_unpack* pass performs the inverse operation. The *memory_dff* pass can combine asynchronous memory ports that are fed by or feeding registers into synchronous memory ports. The *memory_bram* pass can be used to recognize *$mem_v2* cells that can be implemented with a block RAM resource on an FPGA. The *memory_map* pass can be used to implement *$mem_v2* cells as basic logic: word-wide DFFs and address decoders.

```
yosys> help $mem

    Simulation model (verilog)
```

Listing 9.61: simlib.v

```
module \$mem (RD_CLK, RD_EN, RD_ADDR, RD_DATA, WR_CLK, WR_EN, WR_ADDR, WR_DATA);

    parameter MEMID = "";
    parameter signed SIZE = 4;
    parameter signed OFFSET = 0;
    parameter signed ABITS = 2;
    parameter signed WIDTH = 8;
    parameter signed INIT = 1'bx;

    parameter signed RD_PORTS = 1;
    parameter RD_CLK_ENABLE = 1'b1;
    parameter RD_CLK_POLARITY = 1'b1;
    parameter RD_TRANSPARENT = 1'b1;

    parameter signed WR_PORTS = 1;
    parameter WR_CLK_ENABLE = 1'b1;
    parameter WR_CLK_POLARITY = 1'b1;

    input [RD_PORTS-1:0] RD_CLK;
    input [RD_PORTS-1:0] RD_EN;
    input [RD_PORTS*ABITS-1:0] RD_ADDR;
    output reg [RD_PORTS*WIDTH-1:0] RD_DATA;

    input [WR_PORTS-1:0] WR_CLK;
    input [WR_PORTS*WIDTH-1:0] WR_EN;
    input [WR_PORTS*ABITS-1:0] WR_ADDR;
    input [WR_PORTS*WIDTH-1:0] WR_DATA;

    reg [WIDTH-1:0] memory [SIZE-1:0];

    integer i, j;
    reg [WR_PORTS-1:0] LAST_WR_CLK;
    reg [RD_PORTS-1:0] LAST_RD_CLK;

    function port_active;
        input clk_enable;
        input clk_polarity;
        input last_clk;
        input this_clk;
        begin
            casez ({clk_enable, clk_polarity, last_clk, this_clk})
                4'b0???: port_active = 1;
                4'b1101: port_active = 1;
                4'b1010: port_active = 1;
                default: port_active = 0;
            endcase
        end
    endfunction

    initial begin
        for (i = 0; i < SIZE; i = i+1)
```

(continues on next page)

(continued from previous page)

```
2985            memory[i] = INIT >>> (i*WIDTH);
2986    end
2987
2988    always @(RD_CLK, RD_ADDR, RD_DATA, WR_CLK, WR_EN, WR_ADDR, WR_DATA) begin
2989    `ifdef SIMLIB_MEMDELAY
2990        #`SIMLIB_MEMDELAY;
2991    `endif
2992        for (i = 0; i < RD_PORTS; i = i+1) begin
2993            if (!RD_TRANSPARENT[i] && RD_CLK_ENABLE[i] && RD_EN[i] && port_
    ↪active(RD_CLK_ENABLE[i], RD_CLK_POLARITY[i], LAST_RD_CLK[i], RD_CLK[i])) begin
2994                // $display("Read from %s: addr=%b data=%b", MEMID, RD_ADDR[i*ABITS␣
    ↪+: ABITS],  memory[RD_ADDR[i*ABITS +: ABITS] - OFFSET]);
2995                RD_DATA[i*WIDTH +: WIDTH] <= memory[RD_ADDR[i*ABITS +: ABITS] -␣
    ↪OFFSET];
2996            end
2997        end
2998
2999        for (i = 0; i < WR_PORTS; i = i+1) begin
3000            if (port_active(WR_CLK_ENABLE[i], WR_CLK_POLARITY[i], LAST_WR_CLK[i],␣
    ↪WR_CLK[i]))
3001                for (j = 0; j < WIDTH; j = j+1)
3002                    if (WR_EN[i*WIDTH+j]) begin
3003                        // $display("Write to %s: addr=%b data=%b", MEMID, WR_
    ↪ADDR[i*ABITS +: ABITS], WR_DATA[i*WIDTH+j]);
3004                        memory[WR_ADDR[i*ABITS +: ABITS] - OFFSET][j] = WR_
    ↪DATA[i*WIDTH+j];
3005                    end
3006        end
3007
3008        for (i = 0; i < RD_PORTS; i = i+1) begin
3009            if ((RD_TRANSPARENT[i] || !RD_CLK_ENABLE[i]) && port_active(RD_CLK_
    ↪ENABLE[i], RD_CLK_POLARITY[i], LAST_RD_CLK[i], RD_CLK[i])) begin
3010                // $display("Transparent read from %s: addr=%b data=%b", MEMID, RD_
    ↪ADDR[i*ABITS +: ABITS],  memory[RD_ADDR[i*ABITS +: ABITS] - OFFSET]);
3011                RD_DATA[i*WIDTH +: WIDTH] <= memory[RD_ADDR[i*ABITS +: ABITS] -␣
    ↪OFFSET];
3012            end
3013        end
3014
3015        LAST_RD_CLK <= RD_CLK;
3016        LAST_WR_CLK <= WR_CLK;
3017    end
3018
3019 endmodule
```

```
yosys> help $mem_v2

    Simulation model (verilog)
```

Listing 9.62: simlib.v

```
module \$mem_v2 (RD_CLK, RD_EN, RD_ARST, RD_SRST, RD_ADDR, RD_DATA, WR_CLK, WR_EN,␣
↪WR_ADDR, WR_DATA);

    parameter MEMID = "";
    parameter signed SIZE = 4;
    parameter signed OFFSET = 0;
    parameter signed ABITS = 2;
    parameter signed WIDTH = 8;
    parameter signed INIT = 1'bx;

    parameter signed RD_PORTS = 1;
    parameter RD_CLK_ENABLE = 1'b1;
    parameter RD_CLK_POLARITY = 1'b1;
    parameter RD_TRANSPARENCY_MASK = 1'b0;
    parameter RD_COLLISION_X_MASK = 1'b0;
    parameter RD_WIDE_CONTINUATION = 1'b0;
    parameter RD_CE_OVER_SRST = 1'b0;
    parameter RD_ARST_VALUE = 1'b0;
    parameter RD_SRST_VALUE = 1'b0;
    parameter RD_INIT_VALUE = 1'b0;

    parameter signed WR_PORTS = 1;
    parameter WR_CLK_ENABLE = 1'b1;
    parameter WR_CLK_POLARITY = 1'b1;
    parameter WR_PRIORITY_MASK = 1'b0;
    parameter WR_WIDE_CONTINUATION = 1'b0;

    input [RD_PORTS-1:0] RD_CLK;
    input [RD_PORTS-1:0] RD_EN;
    input [RD_PORTS-1:0] RD_ARST;
    input [RD_PORTS-1:0] RD_SRST;
    input [RD_PORTS*ABITS-1:0] RD_ADDR;
    output reg [RD_PORTS*WIDTH-1:0] RD_DATA;

    input [WR_PORTS-1:0] WR_CLK;
    input [WR_PORTS*WIDTH-1:0] WR_EN;
    input [WR_PORTS*ABITS-1:0] WR_ADDR;
    input [WR_PORTS*WIDTH-1:0] WR_DATA;

    reg [WIDTH-1:0] memory [SIZE-1:0];

    integer i, j, k;
    reg [WR_PORTS-1:0] LAST_WR_CLK;
    reg [RD_PORTS-1:0] LAST_RD_CLK;

    function port_active;
        input clk_enable;
        input clk_polarity;
        input last_clk;
        input this_clk;
        begin
```

(continues on next page)

(continued from previous page)

```
3073            casez ({clk_enable, clk_polarity, last_clk, this_clk})
3074                4'b0???: port_active = 1;
3075                4'b1101: port_active = 1;
3076                4'b1010: port_active = 1;
3077                default: port_active = 0;
3078            endcase
3079        end
3080    endfunction
3081
3082    initial begin
3083        for (i = 0; i < SIZE; i = i+1)
3084            memory[i] = INIT >>> (i*WIDTH);
3085        RD_DATA = RD_INIT_VALUE;
3086    end
3087
3088    always @(RD_CLK, RD_ARST, RD_ADDR, RD_DATA, WR_CLK, WR_EN, WR_ADDR, WR_DATA)␣
↪begin
3089    `ifdef SIMLIB_MEMDELAY
3090        #`SIMLIB_MEMDELAY;
3091    `endif
3092        for (i = 0; i < RD_PORTS; i = i+1) begin
3093            if (RD_CLK_ENABLE[i] && RD_EN[i] && port_active(RD_CLK_ENABLE[i], RD_
↪CLK_POLARITY[i], LAST_RD_CLK[i], RD_CLK[i])) begin
3094                // $display("Read from %s: addr=%b data=%b", MEMID, RD_ADDR[i*ABITS␣
↪+: ABITS],  memory[RD_ADDR[i*ABITS +: ABITS] - OFFSET]);
3095                RD_DATA[i*WIDTH +: WIDTH] <= memory[RD_ADDR[i*ABITS +: ABITS] -␣
↪OFFSET];
3096
3097                for (j = 0; j < WR_PORTS; j = j+1) begin
3098                    if (RD_TRANSPARENCY_MASK[i*WR_PORTS + j] && port_active(WR_CLK_
↪ENABLE[j], WR_CLK_POLARITY[j], LAST_WR_CLK[j], WR_CLK[j]) && RD_ADDR[i*ABITS +:␣
↪ABITS] == WR_ADDR[j*ABITS +: ABITS])
3099                        for (k = 0; k < WIDTH; k = k+1)
3100                            if (WR_EN[j*WIDTH+k])
3101                                RD_DATA[i*WIDTH+k] <= WR_DATA[j*WIDTH+k];
3102                    if (RD_COLLISION_X_MASK[i*WR_PORTS + j] && port_active(WR_CLK_
↪ENABLE[j], WR_CLK_POLARITY[j], LAST_WR_CLK[j], WR_CLK[j]) && RD_ADDR[i*ABITS +:␣
↪ABITS] == WR_ADDR[j*ABITS +: ABITS])
3103                        for (k = 0; k < WIDTH; k = k+1)
3104                            if (WR_EN[j*WIDTH+k])
3105                                RD_DATA[i*WIDTH+k] <= 1'bx;
3106                end
3107            end
3108        end
3109
3110        for (i = 0; i < WR_PORTS; i = i+1) begin
3111            if (port_active(WR_CLK_ENABLE[i], WR_CLK_POLARITY[i], LAST_WR_CLK[i],␣
↪WR_CLK[i]))
3112                for (j = 0; j < WIDTH; j = j+1)
3113                    if (WR_EN[i*WIDTH+j]) begin
3114                        // $display("Write to %s: addr=%b data=%b", MEMID, WR_
↪ADDR[i*ABITS +: ABITS], WR_DATA[i*WIDTH+j]);
```

(continues on next page)

(continued from previous page)

```
                        memory[WR_ADDR[i*ABITS +: ABITS] - OFFSET][j] = WR_
↪DATA[i*WIDTH+j];
                    end
        end

        for (i = 0; i < RD_PORTS; i = i+1) begin
            if (!RD_CLK_ENABLE[i]) begin
                // $display("Combinatorial read from %s: addr=%b data=%b", MEMID,␣
↪RD_ADDR[i*ABITS +: ABITS],  memory[RD_ADDR[i*ABITS +: ABITS] - OFFSET]);
                RD_DATA[i*WIDTH +: WIDTH] <= memory[RD_ADDR[i*ABITS +: ABITS] -␣
↪OFFSET];
            end
        end

        for (i = 0; i < RD_PORTS; i = i+1) begin
            if (RD_SRST[i] && port_active(RD_CLK_ENABLE[i], RD_CLK_POLARITY[i],␣
↪LAST_RD_CLK[i], RD_CLK[i]) && (RD_EN[i] || !RD_CE_OVER_SRST[i]))
                RD_DATA[i*WIDTH +: WIDTH] <= RD_SRST_VALUE[i*WIDTH +: WIDTH];
            if (RD_ARST[i])
                RD_DATA[i*WIDTH +: WIDTH] <= RD_ARST_VALUE[i*WIDTH +: WIDTH];
        end

        LAST_RD_CLK <= RD_CLK;
        LAST_WR_CLK <= WR_CLK;
    end

endmodule
```

```
yosys> help $meminit

    Simulation model (verilog)
```

Listing 9.63: simlib.v

```
module \$meminit (ADDR, DATA);

    parameter MEMID = "";
    parameter ABITS = 8;
    parameter WIDTH = 8;
    parameter WORDS = 1;

    parameter PRIORITY = 0;

    input [ABITS-1:0] ADDR;
    input [WORDS*WIDTH-1:0] DATA;

    initial begin
        if (MEMID != "") begin
            $display("ERROR: Found non-simulatable instance of $meminit!");
            $finish;
        end
    end
```

(continues on next page)

(continued from previous page)

```
2903
2904 endmodule
```

```
yosys> help $meminit_v2
```

```
    Simulation model (verilog)
```

Listing 9.64: simlib.v

```
2909 module \$meminit_v2 (ADDR, DATA, EN);
2910
2911     parameter MEMID = "";
2912     parameter ABITS = 8;
2913     parameter WIDTH = 8;
2914     parameter WORDS = 1;
2915
2916     parameter PRIORITY = 0;
2917
2918     input [ABITS-1:0] ADDR;
2919     input [WORDS*WIDTH-1:0] DATA;
2920     input [WIDTH-1:0] EN;
2921
2922     initial begin
2923         if (MEMID != "") begin
2924             $display("ERROR: Found non-simulatable instance of $meminit_v2!");
2925             $finish;
2926         end
2927     end
2928
2929 endmodule
```

```
yosys> help $memrd
```

```
    Simulation model (verilog)
```

Listing 9.65: simlib.v

```
2776 module \$memrd (CLK, EN, ADDR, DATA);
2777
2778     parameter MEMID = "";
2779     parameter ABITS = 8;
2780     parameter WIDTH = 8;
2781
2782     parameter CLK_ENABLE = 0;
2783     parameter CLK_POLARITY = 0;
2784     parameter TRANSPARENT = 0;
2785
2786     input CLK, EN;
2787     input [ABITS-1:0] ADDR;
2788     output [WIDTH-1:0] DATA;
2789
2790     initial begin
2791         if (MEMID != "") begin
```

(continues on next page)

(continued from previous page)

```
2792            $display("ERROR: Found non-simulatable instance of $memrd!");
2793            $finish;
2794        end
2795    end
2796
2797 endmodule
```

yosys> help $memrd_v2

Simulation model (verilog)

Listing 9.66: simlib.v

```
2801 module \$memrd_v2 (CLK, EN, ARST, SRST, ADDR, DATA);
2802
2803     parameter MEMID = "";
2804     parameter ABITS = 8;
2805     parameter WIDTH = 8;
2806
2807     parameter CLK_ENABLE = 0;
2808     parameter CLK_POLARITY = 0;
2809     parameter TRANSPARENCY_MASK = 0;
2810     parameter COLLISION_X_MASK = 0;
2811     parameter ARST_VALUE = 0;
2812     parameter SRST_VALUE = 0;
2813     parameter INIT_VALUE = 0;
2814     parameter CE_OVER_SRST = 0;
2815
2816     input CLK, EN, ARST, SRST;
2817     input [ABITS-1:0] ADDR;
2818     output [WIDTH-1:0] DATA;
2819
2820     initial begin
2821         if (MEMID != "") begin
2822             $display("ERROR: Found non-simulatable instance of $memrd_v2!");
2823             $finish;
2824         end
2825     end
2826
2827 endmodule
```

yosys> help $memwr

Simulation model (verilog)

Listing 9.67: simlib.v

```
2832 module \$memwr (CLK, EN, ADDR, DATA);
2833
2834     parameter MEMID = "";
2835     parameter ABITS = 8;
2836     parameter WIDTH = 8;
2837
```

(continues on next page)

(continued from previous page)

```
2838      parameter CLK_ENABLE = 0;
2839      parameter CLK_POLARITY = 0;
2840      parameter PRIORITY = 0;
2841
2842      input CLK;
2843      input [WIDTH-1:0] EN;
2844      input [ABITS-1:0] ADDR;
2845      input [WIDTH-1:0] DATA;
2846
2847      initial begin
2848          if (MEMID != "") begin
2849              $display("ERROR: Found non-simulatable instance of $memwr!");
2850              $finish;
2851          end
2852      end
2853
2854  endmodule
```

```
yosys> help $memwr_v2

    Simulation model (verilog)
```

Listing 9.68: simlib.v

```
2857  module \$memwr_v2 (CLK, EN, ADDR, DATA);
2858
2859      parameter MEMID = "";
2860      parameter ABITS = 8;
2861      parameter WIDTH = 8;
2862
2863      parameter CLK_ENABLE = 0;
2864      parameter CLK_POLARITY = 0;
2865      parameter PORTID = 0;
2866      parameter PRIORITY_MASK = 0;
2867
2868      input CLK;
2869      input [WIDTH-1:0] EN;
2870      input [ABITS-1:0] ADDR;
2871      input [WIDTH-1:0] DATA;
2872
2873      initial begin
2874          if (MEMID != "") begin
2875              $display("ERROR: Found non-simulatable instance of $memwr_v2!");
2876              $finish;
2877          end
2878      end
2879
2880  endmodule
```

9.1.6 Finite state machines

Todo

Describe *$fsm* cell

```
yosys> help $fsm

    Simulation model (verilog)
```

Listing 9.69: simlib.v

```
2681 module \$fsm (CLK, ARST, CTRL_IN, CTRL_OUT);
2682
2683     parameter NAME = "";
2684
2685     parameter CLK_POLARITY = 1'b1;
2686     parameter ARST_POLARITY = 1'b1;
2687
2688     parameter CTRL_IN_WIDTH = 1;
2689     parameter CTRL_OUT_WIDTH = 1;
2690
2691     parameter STATE_BITS = 1;
2692     parameter STATE_NUM = 1;
2693     parameter STATE_NUM_LOG2 = 1;
2694     parameter STATE_RST = 0;
2695     parameter STATE_TABLE = 1'b0;
2696
2697     parameter TRANS_NUM = 1;
2698     parameter TRANS_TABLE = 4'b0x0x;
2699
2700     input CLK, ARST;
2701     input [CTRL_IN_WIDTH-1:0] CTRL_IN;
2702     output reg [CTRL_OUT_WIDTH-1:0] CTRL_OUT;
2703
2704     wire pos_clk = CLK == CLK_POLARITY;
2705     wire pos_arst = ARST == ARST_POLARITY;
2706
2707     reg [STATE_BITS-1:0] state;
2708     reg [STATE_BITS-1:0] state_tmp;
2709     reg [STATE_BITS-1:0] next_state;
2710
2711     reg [STATE_BITS-1:0] tr_state_in;
2712     reg [STATE_BITS-1:0] tr_state_out;
2713     reg [CTRL_IN_WIDTH-1:0] tr_ctrl_in;
2714     reg [CTRL_OUT_WIDTH-1:0] tr_ctrl_out;
2715
2716     integer i;
2717
2718     task tr_fetch;
2719         input [31:0] tr_num;
```

(continues on next page)

(continued from previous page)

```
2720        reg [31:0] tr_pos;
2721        reg [STATE_NUM_LOG2-1:0] state_num;
2722        begin
2723            tr_pos = (2*STATE_NUM_LOG2+CTRL_IN_WIDTH+CTRL_OUT_WIDTH)*tr_num;
2724            tr_ctrl_out = TRANS_TABLE >> tr_pos;
2725            tr_pos = tr_pos + CTRL_OUT_WIDTH;
2726            state_num = TRANS_TABLE >> tr_pos;
2727            tr_state_out = STATE_TABLE >> (STATE_BITS*state_num);
2728            tr_pos = tr_pos + STATE_NUM_LOG2;
2729            tr_ctrl_in = TRANS_TABLE >> tr_pos;
2730            tr_pos = tr_pos + CTRL_IN_WIDTH;
2731            state_num = TRANS_TABLE >> tr_pos;
2732            tr_state_in = STATE_TABLE >> (STATE_BITS*state_num);
2733            tr_pos = tr_pos + STATE_NUM_LOG2;
2734        end
2735    endtask
2736
2737    always @(posedge pos_clk, posedge pos_arst) begin
2738        if (pos_arst) begin
2739            state_tmp = STATE_TABLE[STATE_BITS*(STATE_RST+1)-1:STATE_BITS*STATE_
    ↪RST];
2740            for (i = 0; i < STATE_BITS; i = i+1)
2741                if (state_tmp[i] === 1'bz)
2742                    state_tmp[i] = 0;
2743            state <= state_tmp;
2744        end else begin
2745            state_tmp = next_state;
2746            for (i = 0; i < STATE_BITS; i = i+1)
2747                if (state_tmp[i] === 1'bz)
2748                    state_tmp[i] = 0;
2749            state <= state_tmp;
2750        end
2751    end
2752
2753    always @(state, CTRL_IN) begin
2754        next_state <= STATE_TABLE[STATE_BITS*(STATE_RST+1)-1:STATE_BITS*STATE_RST];
2755        CTRL_OUT <= 'bx;
2756        // $display("---");
2757        // $display("Q: %b %b", state, CTRL_IN);
2758        for (i = 0; i < TRANS_NUM; i = i+1) begin
2759            tr_fetch(i);
2760            // $display("T: %b %b -> %b %b [%d]", tr_state_in, tr_ctrl_in, tr_state_
    ↪out, tr_ctrl_out, i);
2761            casez ({state, CTRL_IN})
2762                {tr_state_in, tr_ctrl_in}: begin
2763                    // $display("-> %b %b <-   MATCH", state, CTRL_IN);
2764                    {next_state, CTRL_OUT} <= {tr_state_out, tr_ctrl_out};
2765                end
2766            endcase
2767        end
2768    end
2769
```

(continues on next page)

(continued from previous page)

```
endmodule
```

9.1.7 Coarse arithmetics

Todo

Add information about *$alu*, *$fa*, *$macc_v2*, and *$lcu* cells.

The *$macc* cell type represents a generalized multiply and accumulate operation. The cell is purely combinational. It outputs the result of summing up a sequence of products and other injected summands.

```
Y = 0 +- a0factor1 * a0factor2 +- a1factor1 * a1factor2 +- ...
     + B[0] + B[1] + ...
```

The A port consists of concatenated pairs of multiplier inputs ("factors"). A zero length factor2 acts as a constant 1, turning factor1 into a simple summand.

In this pseudocode, `u(foo)` means an unsigned int that's foo bits long.

```
struct A {
   u(CONFIG.mul_info[0].factor1_len) a0factor1;
   u(CONFIG.mul_info[0].factor2_len) a0factor2;
   u(CONFIG.mul_info[1].factor1_len) a1factor1;
   u(CONFIG.mul_info[1].factor2_len) a1factor2;
   ...
};
```

The cell's `CONFIG` parameter determines the layout of cell port `A`. The CONFIG parameter carries the following information:

```
struct CONFIG {
   u4 num_bits;
   struct mul_info {
      bool is_signed;
      bool is_subtract;
      u(num_bits) factor1_len;
      u(num_bits) factor2_len;
   }[num_ports];
};
```

B is an array of concatenated 1-bit-wide unsigned integers to also be summed up.

```
yosys> help $alu
```

Arithmetic logic unit

A building block supporting both binary addition/subtraction operations, and indirectly, comparison operations. Typically created by the *alumacc* pass, which transforms: *$add*, *$sub*, *$lt*, *$le*, *$ge*, *$gt*, *$eq*, *$eqx*, *$ne*, *$nex* cells into this *$alu* cell.

Properties

is_evaluable

`Simulation model (verilog)`

Listing 9.70: simlib.v

```
657 module \$alu (A, B, CI, BI, X, Y, CO);
658
659     parameter A_SIGNED = 0;
660     parameter B_SIGNED = 0;
661     parameter A_WIDTH = 1;
662     parameter B_WIDTH = 1;
663     parameter Y_WIDTH = 1;
664
665     input [A_WIDTH-1:0] A;      // Input operand
666     input [B_WIDTH-1:0] B;      // Input operand
667     output [Y_WIDTH-1:0] X;     // A xor B (sign-extended, optional B inversion,
668                                 //          used in combination with
669                                 //          reduction-AND for $eq/$ne ops)
670     output [Y_WIDTH-1:0] Y;     // Sum
671
672     input CI;                   // Carry-in (set for $sub)
673     input BI;                   // Invert-B (set for $sub)
674     output [Y_WIDTH-1:0] CO;    // Carry-out
675
676     wire [Y_WIDTH-1:0] AA, BB;
677
678     generate
679         if (A_SIGNED && B_SIGNED) begin:BLOCK1
680             assign AA = $signed(A), BB = BI ? ~$signed(B) : $signed(B);
681         end else begin:BLOCK2
682             assign AA = $unsigned(A), BB = BI ? ~$unsigned(B) : $unsigned(B);
683         end
684     endgenerate
685
686     // this is 'x' if Y and CO should be all 'x', and '0' otherwise
687     wire y_co_undef = ^{A, A, B, B, CI, CI, BI, BI};
688
689     assign X = AA ^ BB;
690     // Full adder
691     assign Y = (AA + BB + CI) ^ {Y_WIDTH{y_co_undef}};
692
693     function get_carry;
694         input a, b, c;
695         get_carry = (a&b) | (a&c) | (b&c);
696     endfunction
697
698     genvar i;
699     generate
700         assign CO[0] = get_carry(AA[0], BB[0], CI) ^ y_co_undef;
701         for (i = 1; i < Y_WIDTH; i = i+1) begin:BLOCK3
702             assign CO[i] = get_carry(AA[i], BB[i], CO[i-1]) ^ y_co_undef;
703         end
704     endgenerate
705
706 endmodule
```

```
yosys> help $fa
```

Properties

is_evaluable

Simulation model (verilog)

Listing 9.71: simlib.v

```
module \$fa (A, B, C, X, Y);

    parameter WIDTH = 1;

    input [WIDTH-1:0] A, B, C;
    output [WIDTH-1:0] X, Y;

    wire [WIDTH-1:0] t1, t2, t3;

    assign t1 = A ^ B, t2 = A & B, t3 = C & t1;
    assign Y = t1 ^ C, X = (t2 | t3) ^ (Y ^ Y);

endmodule
```

```
yosys> help $lcu
```

Lookahead carry unit A building block dedicated to fast computation of carry-bits used in binary arithmetic operations. By replacing the ripple carry structure used in full-adder blocks, the more significant bits of the sum can be expected to be computed more quickly. Typically created during *techmap* of $alu cells (see the "_90_alu" rule in +/techmap.v).

Properties

is_evaluable

Simulation model (verilog)

Listing 9.72: simlib.v

```
module \$lcu (P, G, CI, CO);

    parameter WIDTH = 1;

    input [WIDTH-1:0] P;     // Propagate
    input [WIDTH-1:0] G;     // Generate
    input CI;                // Carry-in

    output reg [WIDTH-1:0] CO; // Carry-out

    integer i;
    always @* begin
        CO = 'bx;
        if (^{P, G, CI} !== 1'bx) begin
            CO[0] = G[0] || (P[0] && CI);
            for (i = 1; i < WIDTH; i = i+1)
                CO[i] = G[i] || (P[i] && CO[i-1]);
        end
    end
```

(continues on next page)

(continued from previous page)

```
644
645 endmodule
```

yosys> help $macc

Multiply and accumulate. A building block for summing any number of negated and unnegated signals and arithmetic products of pairs of signals. Cell port A concatenates pairs of signals to be multiplied together. When the second signal in a pair is zero length, a constant 1 is used instead as the second factor. Cell port B concatenates 1-bit-wide signals to also be summed, such as "carry in" in adders. Typically created by the *alumacc* pass, which transforms $add and $mul into $macc cells.

Properties

is_evaluable

Simulation model (verilog)

Listing 9.73: simlib.v

```
1073 module \$macc (A, B, Y);
1074
1075     parameter A_WIDTH = 0;
1076     parameter B_WIDTH = 0;
1077     parameter Y_WIDTH = 0;
1078     // CONFIG determines the layout of A, as explained below
1079     parameter CONFIG = 4'b0000;
1080     parameter CONFIG_WIDTH = 4;
1081
1082     // In the terms used for this cell, there's mixed meanings for the term "port".␣
     ↪To disambiguate:
1083     // A cell port is for example the A input (it is constructed in C++ as cell->
     ↪setPort(ID::A, ...))
1084     // Multiplier ports are pairs of multiplier inputs ("factors").
1085     // If the second signal in such a pair is zero length, no multiplication is␣
     ↪necessary, and the first signal is just added to the sum.
1086     input [A_WIDTH-1:0] A; // Cell port A is the concatenation of all arithmetic␣
     ↪ports
1087     input [B_WIDTH-1:0] B; // Cell port B is the concatenation of single-bit␣
     ↪unsigned signals to be also added to the sum
1088     output reg [Y_WIDTH-1:0] Y; // Output sum
1089
1090     // Xilinx XSIM does not like $clog2() below..
1091     function integer my_clog2;
1092         input integer v;
1093         begin
1094             if (v > 0)
1095                 v = v - 1;
1096             my_clog2 = 0;
1097             while (v) begin
1098                 v = v >> 1;
1099                 my_clog2 = my_clog2 + 1;
1100             end
1101         end
1102     endfunction
1103
```

(continues on next page)

(continued from previous page)

```
    // Bits that a factor's length field in CONFIG per factor in cell port A
    localparam integer num_bits = CONFIG[3:0] > 0 ? CONFIG[3:0] : 1;
    // Number of multiplier ports
    localparam integer num_ports = (CONFIG_WIDTH-4) / (2 + 2*num_bits);
    // Minium bit width of an induction variable to iterate over all bits of cell port A
    localparam integer num_abits = my_clog2(A_WIDTH) > 0 ? my_clog2(A_WIDTH) : 1;

    // In this pseudocode, u(foo) means an unsigned int that's foo bits long.
    // The CONFIG parameter carries the following information:
    //    struct CONFIG {
    //        u4 num_bits;
    //        struct port_field {
    //            bool is_signed;
    //            bool is_subtract;
    //            u(num_bits) factor1_len;
    //            u(num_bits) factor2_len;
    //        }[num_ports];
    //    };

    // The A cell port carries the following information:
    //    struct A {
    //        u(CONFIG.port_field[0].factor1_len) port0factor1;
    //        u(CONFIG.port_field[0].factor2_len) port0factor2;
    //        u(CONFIG.port_field[1].factor1_len) port1factor1;
    //        u(CONFIG.port_field[1].factor2_len) port1factor2;
    //        ...
    //    };
    // and log(sizeof(A)) is num_abits.
    // No factor1 may have a zero length.
    // A factor2 having a zero length implies factor2 is replaced with a constant 1.

    // Additionally, B is an array of 1-bit-wide unsigned integers to also be summed up.
    // Finally, we have:
    // Y = port0factor1 * port0factor2 + port1factor1 * port1factor2 + ...
    //     * B[0] + B[1] + ...

    function [2*num_ports*num_abits-1:0] get_port_offsets;
        input [CONFIG_WIDTH-1:0] cfg;
        integer i, cursor;
        begin
            cursor = 0;
            get_port_offsets = 0;
            for (i = 0; i < num_ports; i = i+1) begin
                get_port_offsets[(2*i + 0)*num_abits +: num_abits] = cursor;
                cursor = cursor + cfg[4 + i*(2 + 2*num_bits) + 2 +: num_bits];
                get_port_offsets[(2*i + 1)*num_abits +: num_abits] = cursor;
                cursor = cursor + cfg[4 + i*(2 + 2*num_bits) + 2 + num_bits +: num_bits];
            end
        end
```

(continues on next page)

(continued from previous page)

```
1153    endfunction
1154
1155    localparam [2*num_ports*num_abits-1:0] port_offsets = get_port_offsets(CONFIG);
1156
1157    `define PORT_IS_SIGNED   (0 + CONFIG[4 + i*(2 + 2*num_bits)])
1158    `define PORT_DO_SUBTRACT (0 + CONFIG[4 + i*(2 + 2*num_bits) + 1])
1159    `define PORT_SIZE_A      (0 + CONFIG[4 + i*(2 + 2*num_bits) + 2 +: num_bits])
1160    `define PORT_SIZE_B      (0 + CONFIG[4 + i*(2 + 2*num_bits) + 2 + num_bits +:␣
    ↪num_bits])
1161    `define PORT_OFFSET_A    (0 + port_offsets[2*i*num_abits +: num_abits])
1162    `define PORT_OFFSET_B    (0 + port_offsets[2*i*num_abits + num_abits +: num_
    ↪abits])
1163
1164    integer i, j;
1165    reg [Y_WIDTH-1:0] tmp_a, tmp_b;
1166
1167    always @* begin
1168        Y = 0;
1169        for (i = 0; i < num_ports; i = i+1)
1170        begin
1171            tmp_a = 0;
1172            tmp_b = 0;
1173
1174            for (j = 0; j < `PORT_SIZE_A; j = j+1)
1175                tmp_a[j] = A[`PORT_OFFSET_A + j];
1176
1177            if (`PORT_IS_SIGNED && `PORT_SIZE_A > 0)
1178                for (j = `PORT_SIZE_A; j < Y_WIDTH; j = j+1)
1179                    tmp_a[j] = tmp_a[`PORT_SIZE_A-1];
1180
1181            for (j = 0; j < `PORT_SIZE_B; j = j+1)
1182                tmp_b[j] = A[`PORT_OFFSET_B + j];
1183
1184            if (`PORT_IS_SIGNED && `PORT_SIZE_B > 0)
1185                for (j = `PORT_SIZE_B; j < Y_WIDTH; j = j+1)
1186                    tmp_b[j] = tmp_b[`PORT_SIZE_B-1];
1187
1188            if (`PORT_SIZE_B > 0)
1189                tmp_a = tmp_a * tmp_b;
1190
1191            if (`PORT_DO_SUBTRACT)
1192                Y = Y - tmp_a;
1193            else
1194                Y = Y + tmp_a;
1195        end
1196        for (i = 0; i < B_WIDTH; i = i+1) begin
1197            Y = Y + B[i];
1198        end
1199    end
1200
1201    `undef PORT_IS_SIGNED
1202    `undef PORT_DO_SUBTRACT
```

(continues on next page)

(continued from previous page)

```
    `undef PORT_SIZE_A
    `undef PORT_SIZE_B
    `undef PORT_OFFSET_A
    `undef PORT_OFFSET_B

endmodule
```

yosys> help $macc_v2

Multiply and add. This cell represents a generic fused multiply-add operation, it supersedes the earlier $macc cell.

Properties

is_evaluable

Simulation model (verilog)

Listing 9.74: simlib.v

```
module \$macc_v2 (A, B, C, Y);

    parameter NPRODUCTS = 0;
    parameter NADDENDS = 0;
    parameter A_WIDTHS = 16'h0000;
    parameter B_WIDTHS = 16'h0000;
    parameter C_WIDTHS = 16'h0000;
    parameter Y_WIDTH = 0;

    parameter PRODUCT_NEGATED = 1'bx;
    parameter ADDEND_NEGATED = 1'bx;
    parameter A_SIGNED = 1'bx;
    parameter B_SIGNED = 1'bx;
    parameter C_SIGNED = 1'bx;

    function integer sum_widths1;
        input [(16*NPRODUCTS)-1:0] widths;
        integer i;
        begin
            sum_widths1 = 0;
            for (i = 0; i < NPRODUCTS; i++) begin
                sum_widths1 = sum_widths1 + widths[16*i+:16];
            end
        end
    endfunction

    function integer sum_widths2;
        input [(16*NADDENDS)-1:0] widths;
        integer i;
        begin
            sum_widths2 = 0;
            for (i = 0; i < NADDENDS; i++) begin
                sum_widths2 = sum_widths2 + widths[16*i+:16];
            end
        end
```

(continues on next page)

(continued from previous page)

```
    endfunction

    input [sum_widths1(A_WIDTHS)-1:0] A; // concatenation of LHS factors
    input [sum_widths1(B_WIDTHS)-1:0] B; // concatenation of RHS factors
    input [sum_widths2(C_WIDTHS)-1:0] C; // concatenation of summands
    output reg [Y_WIDTH-1:0] Y; // output sum

    integer i, j, ai, bi, ci, aw, bw, cw;
    reg [Y_WIDTH-1:0] product;
    reg [Y_WIDTH-1:0] addend, oper_a, oper_b;

    always @* begin
        Y = 0;
        ai = 0;
        bi = 0;
        for (i = 0; i < NPRODUCTS; i = i+1)
        begin
            aw = A_WIDTHS[16*i+:16];
            bw = B_WIDTHS[16*i+:16];

            oper_a = 0;
            oper_b = 0;
            for (j = 0; j < Y_WIDTH && j < aw; j = j + 1)
                oper_a[j] = A[ai + j];
            for (j = 0; j < Y_WIDTH && j < bw; j = j + 1)
                oper_b[j] = B[bi + j];
            // A_SIGNED[i] == B_SIGNED[i] as RTLIL invariant
            if (A_SIGNED[i] && B_SIGNED[i]) begin
                for (j = aw; j > 0 && j < Y_WIDTH; j = j + 1)
                    oper_a[j] = oper_a[j - 1];
                for (j = bw; j > 0 && j < Y_WIDTH; j = j + 1)
                    oper_b[j] = oper_b[j - 1];
            end

            product = oper_a * oper_b;

            if (PRODUCT_NEGATED[i])
                Y = Y - product;
            else
                Y = Y + product;

            ai = ai + aw;
            bi = bi + bw;
        end

        ci = 0;
        for (i = 0; i < NADDENDS; i = i+1)
        begin
            cw = C_WIDTHS[16*i+:16];

            addend = 0;
            for (j = 0; j < Y_WIDTH && j < cw; j = j + 1)
```

(continues on next page)

(continued from previous page)

```
                addend[j] = C[ci + j];
            if (C_SIGNED[i]) begin
                for (j = cw; j > 0 && j < Y_WIDTH; j = j + 1)
                    addend[j] = addend[j - 1];
            end

            if (ADDEND_NEGATED[i])
                Y = Y - addend;
            else
                Y = Y + addend;

            ci = ci + cw;
        end
    end

endmodule
```

9.1.8 Arbitrary logic functions

The *$lut* cell type implements a single-output LUT (lookup table). It implements an arbitrary logic function with its \LUT parameter to map input port \A to values of \Y output port values. In psuedocode: `Y = \LUT[A]`. \A has width set by parameter \WIDTH and \Y has a width of 1. Every logic function with a single bit output has a unique *$lut* representation.

The *$sop* cell type implements a sum-of-products expression, also known as disjunctive normal form (DNF). It implements an arbitrary logic function. Its structure mimics a programmable logic array (PLA). Output port \Y is the sum of products of the bits of the input port \A as defined by parameter \TABLE. \A is \WIDTH bits wide. The number of products in the sum is set by parameter \DEPTH, and each product has two bits for each input bit - for the presence of the unnegated and negated version of said input bit in the product. Therefore the \TABLE parameter holds `2 * \WIDTH * \DEPTH` bits.

For example:

Let \WIDTH be 3. We would like to represent `\Y =~\A[0] + \A[1]~\A[2]`. There are 2 products to be summed, so \DEPTH shall be 2.

```
~A[2]-----+
 A[2]----+|
~A[1]---+||
 A[1]--+|||
~A[0]-+||||
 A[0]+|||||
     |||||| product formula
     010000 ~\A[0]
     001001 \A[1]~\A[2]
```

So the value of \TABLE will become `010000001001`.

Any logic function with a single bit output can be represented with $sop but may have variously minimized or ordered summands represented in the \TABLE values.

```
yosys> help $lut
```

Properties

is_evaluable

Simulation model (verilog)

Listing 9.75: simlib.v

```
1755 module \$lut (A, Y);
1756
1757     parameter WIDTH = 0;
1758     parameter LUT = 0;
1759
1760     input [WIDTH-1:0] A;
1761     output Y;
1762
1763     \$bmux #(.WIDTH(1), .S_WIDTH(WIDTH)) mux(.A(LUT[(1<<WIDTH)-1:0]), .S(A), .Y(Y));
1764
1765 endmodule
```

yosys> help $sop

Properties

is_evaluable

Simulation model (verilog)

Listing 9.76: simlib.v

```
1771 module \$sop (A, Y);
1772
1773     parameter WIDTH = 0;
1774     parameter DEPTH = 0;
1775     parameter TABLE = 0;
1776
1777     input [WIDTH-1:0] A;
1778     output reg Y;
1779
1780     integer i, j;
1781     reg match;
1782
1783     always @* begin
1784         Y = 0;
1785         for (i = 0; i < DEPTH; i=i+1) begin
1786             match = 1;
1787             for (j = 0; j < WIDTH; j=j+1) begin
1788                 if (TABLE[2*WIDTH*i + 2*j + 0] && A[j]) match = 0;
1789                 if (TABLE[2*WIDTH*i + 2*j + 1] && !A[j]) match = 0;
1790             end
1791             if (match) Y = 1;
1792         end
1793     end
1794
1795 endmodule
```

9.1.9 Specify rules

Todo

$specify2, *$specify3*, and *$specrule* cells.

```
yosys> help $specify2
```

Properties

is_evaluable

Simulation model (verilog)

Listing 9.77: simlib.v

```
1823 module \$specify2 (EN, SRC, DST);
1824
1825     parameter FULL = 0;
1826     parameter SRC_WIDTH = 1;
1827     parameter DST_WIDTH = 1;
1828
1829     parameter SRC_DST_PEN = 0;
1830     parameter SRC_DST_POL = 0;
1831
1832     parameter T_RISE_MIN = 0;
1833     parameter T_RISE_TYP = 0;
1834     parameter T_RISE_MAX = 0;
1835
1836     parameter T_FALL_MIN = 0;
1837     parameter T_FALL_TYP = 0;
1838     parameter T_FALL_MAX = 0;
1839
1840     input EN;
1841     input [SRC_WIDTH-1:0] SRC;
1842     input [DST_WIDTH-1:0] DST;
1843
1844     localparam SD = SRC_DST_PEN ? (SRC_DST_POL ? 1 : 2) : 0;
1845
1846     `ifdef SIMLIB_SPECIFY
1847     specify
1848         if (EN && SD==0 && !FULL) (SRC  => DST) = (T_RISE_MIN:T_RISE_TYP:T_RISE_MAX,
    ↪ T_FALL_MIN:T_FALL_TYP:T_FALL_MAX);
1849         if (EN && SD==0 &&  FULL) (SRC  *> DST) = (T_RISE_MIN:T_RISE_TYP:T_RISE_MAX,
    ↪ T_FALL_MIN:T_FALL_TYP:T_FALL_MAX);
1850         if (EN && SD==1 && !FULL) (SRC +=> DST) = (T_RISE_MIN:T_RISE_TYP:T_RISE_MAX,
    ↪ T_FALL_MIN:T_FALL_TYP:T_FALL_MAX);
1851         if (EN && SD==1 &&  FULL) (SRC +*> DST) = (T_RISE_MIN:T_RISE_TYP:T_RISE_MAX,
    ↪ T_FALL_MIN:T_FALL_TYP:T_FALL_MAX);
1852         if (EN && SD==2 && !FULL) (SRC -=> DST) = (T_RISE_MIN:T_RISE_TYP:T_RISE_MAX,
    ↪ T_FALL_MIN:T_FALL_TYP:T_FALL_MAX);
1853         if (EN && SD==2 &&  FULL) (SRC -*> DST) = (T_RISE_MIN:T_RISE_TYP:T_RISE_MAX,
    ↪ T_FALL_MIN:T_FALL_TYP:T_FALL_MAX);
```

(continues on next page)

(continued from previous page)

```
1854     endspecify
1855     `endif
1856
1857 endmodule
```

```
yosys> help $specify3
```

Properties

is_evaluable

Simulation model (verilog)

Listing 9.78: simlib.v

```
1862 module \$specify3 (EN, SRC, DST, DAT);
1863
1864     parameter FULL = 0;
1865     parameter SRC_WIDTH = 1;
1866     parameter DST_WIDTH = 1;
1867
1868     parameter EDGE_EN = 0;
1869     parameter EDGE_POL = 0;
1870
1871     parameter SRC_DST_PEN = 0;
1872     parameter SRC_DST_POL = 0;
1873
1874     parameter DAT_DST_PEN = 0;
1875     parameter DAT_DST_POL = 0;
1876
1877     parameter T_RISE_MIN = 0;
1878     parameter T_RISE_TYP = 0;
1879     parameter T_RISE_MAX = 0;
1880
1881     parameter T_FALL_MIN = 0;
1882     parameter T_FALL_TYP = 0;
1883     parameter T_FALL_MAX = 0;
1884
1885     input EN;
1886     input [SRC_WIDTH-1:0] SRC;
1887     input [DST_WIDTH-1:0] DST, DAT;
1888
1889     localparam ED = EDGE_EN     ? (EDGE_POL    ? 1 : 2) : 0;
1890     localparam SD = SRC_DST_PEN ? (SRC_DST_POL ? 1 : 2) : 0;
1891     localparam DD = DAT_DST_PEN ? (DAT_DST_POL ? 1 : 2) : 0;
1892
1893     `ifdef SIMLIB_SPECIFY
1894     specify
1895         // DD=0
1896
1897         if (EN && DD==0 && SD==0 && ED==0 && !FULL) (        SRC  => (DST  : DAT))␣
↪= (T_RISE_MIN:T_RISE_TYP:T_RISE_MAX, T_FALL_MIN:T_FALL_TYP:T_FALL_MAX);
1898         if (EN && DD==0 && SD==0 && ED==0 &&  FULL) (        SRC  *> (DST  : DAT))␣
↪= (T_RISE_MIN:T_RISE_TYP:T_RISE_MAX, T_FALL_MIN:T_FALL_TYP:T_FALL_MAX);
```

(continues on next page)

(continued from previous page)

```
1899         if (EN && DD==0 && SD==0 && ED==1 && !FULL) (posedge SRC  => (DST  : DAT))␣
     ↪= (T_RISE_MIN:T_RISE_TYP:T_RISE_MAX, T_FALL_MIN:T_FALL_TYP:T_FALL_MAX);
1900         if (EN && DD==0 && SD==0 && ED==1 &&  FULL) (posedge SRC  *> (DST  : DAT))␣
     ↪= (T_RISE_MIN:T_RISE_TYP:T_RISE_MAX, T_FALL_MIN:T_FALL_TYP:T_FALL_MAX);
1901         if (EN && DD==0 && SD==0 && ED==2 && !FULL) (negedge SRC  => (DST  : DAT))␣
     ↪= (T_RISE_MIN:T_RISE_TYP:T_RISE_MAX, T_FALL_MIN:T_FALL_TYP:T_FALL_MAX);
1902         if (EN && DD==0 && SD==0 && ED==2 &&  FULL) (negedge SRC  *> (DST  : DAT))␣
     ↪= (T_RISE_MIN:T_RISE_TYP:T_RISE_MAX, T_FALL_MIN:T_FALL_TYP:T_FALL_MAX);
1903
1904         if (EN && DD==0 && SD==1 && ED==0 && !FULL) (       SRC +=> (DST  : DAT))␣
     ↪= (T_RISE_MIN:T_RISE_TYP:T_RISE_MAX, T_FALL_MIN:T_FALL_TYP:T_FALL_MAX);
1905         if (EN && DD==0 && SD==1 && ED==0 &&  FULL) (       SRC +*> (DST  : DAT))␣
     ↪= (T_RISE_MIN:T_RISE_TYP:T_RISE_MAX, T_FALL_MIN:T_FALL_TYP:T_FALL_MAX);
1906         if (EN && DD==0 && SD==1 && ED==1 && !FULL) (posedge SRC +=> (DST  : DAT))␣
     ↪= (T_RISE_MIN:T_RISE_TYP:T_RISE_MAX, T_FALL_MIN:T_FALL_TYP:T_FALL_MAX);
1907         if (EN && DD==0 && SD==1 && ED==1 &&  FULL) (posedge SRC +*> (DST  : DAT))␣
     ↪= (T_RISE_MIN:T_RISE_TYP:T_RISE_MAX, T_FALL_MIN:T_FALL_TYP:T_FALL_MAX);
1908         if (EN && DD==0 && SD==1 && ED==2 && !FULL) (negedge SRC +=> (DST  : DAT))␣
     ↪= (T_RISE_MIN:T_RISE_TYP:T_RISE_MAX, T_FALL_MIN:T_FALL_TYP:T_FALL_MAX);
1909         if (EN && DD==0 && SD==1 && ED==2 &&  FULL) (negedge SRC +*> (DST  : DAT))␣
     ↪= (T_RISE_MIN:T_RISE_TYP:T_RISE_MAX, T_FALL_MIN:T_FALL_TYP:T_FALL_MAX);
1910
1911         if (EN && DD==0 && SD==2 && ED==0 && !FULL) (       SRC -=> (DST  : DAT))␣
     ↪= (T_RISE_MIN:T_RISE_TYP:T_RISE_MAX, T_FALL_MIN:T_FALL_TYP:T_FALL_MAX);
1912         if (EN && DD==0 && SD==2 && ED==0 &&  FULL) (       SRC -*> (DST  : DAT))␣
     ↪= (T_RISE_MIN:T_RISE_TYP:T_RISE_MAX, T_FALL_MIN:T_FALL_TYP:T_FALL_MAX);
1913         if (EN && DD==0 && SD==2 && ED==1 && !FULL) (posedge SRC -=> (DST  : DAT))␣
     ↪= (T_RISE_MIN:T_RISE_TYP:T_RISE_MAX, T_FALL_MIN:T_FALL_TYP:T_FALL_MAX);
1914         if (EN && DD==0 && SD==2 && ED==1 &&  FULL) (posedge SRC -*> (DST  : DAT))␣
     ↪= (T_RISE_MIN:T_RISE_TYP:T_RISE_MAX, T_FALL_MIN:T_FALL_TYP:T_FALL_MAX);
1915         if (EN && DD==0 && SD==2 && ED==2 && !FULL) (negedge SRC -=> (DST  : DAT))␣
     ↪= (T_RISE_MIN:T_RISE_TYP:T_RISE_MAX, T_FALL_MIN:T_FALL_TYP:T_FALL_MAX);
1916         if (EN && DD==0 && SD==2 && ED==2 &&  FULL) (negedge SRC -*> (DST  : DAT))␣
     ↪= (T_RISE_MIN:T_RISE_TYP:T_RISE_MAX, T_FALL_MIN:T_FALL_TYP:T_FALL_MAX);
1917
1918         // DD=1
1919
1920         if (EN && DD==1 && SD==0 && ED==0 && !FULL) (       SRC  => (DST +: DAT))␣
     ↪= (T_RISE_MIN:T_RISE_TYP:T_RISE_MAX, T_FALL_MIN:T_FALL_TYP:T_FALL_MAX);
1921         if (EN && DD==1 && SD==0 && ED==0 &&  FULL) (       SRC  *> (DST +: DAT))␣
     ↪= (T_RISE_MIN:T_RISE_TYP:T_RISE_MAX, T_FALL_MIN:T_FALL_TYP:T_FALL_MAX);
1922         if (EN && DD==1 && SD==0 && ED==1 && !FULL) (posedge SRC  => (DST +: DAT))␣
     ↪= (T_RISE_MIN:T_RISE_TYP:T_RISE_MAX, T_FALL_MIN:T_FALL_TYP:T_FALL_MAX);
1923         if (EN && DD==1 && SD==0 && ED==1 &&  FULL) (posedge SRC  *> (DST +: DAT))␣
     ↪= (T_RISE_MIN:T_RISE_TYP:T_RISE_MAX, T_FALL_MIN:T_FALL_TYP:T_FALL_MAX);
1924         if (EN && DD==1 && SD==0 && ED==2 && !FULL) (negedge SRC  => (DST +: DAT))␣
     ↪= (T_RISE_MIN:T_RISE_TYP:T_RISE_MAX, T_FALL_MIN:T_FALL_TYP:T_FALL_MAX);
1925         if (EN && DD==1 && SD==0 && ED==2 &&  FULL) (negedge SRC  *> (DST +: DAT))␣
     ↪= (T_RISE_MIN:T_RISE_TYP:T_RISE_MAX, T_FALL_MIN:T_FALL_TYP:T_FALL_MAX);
1926
1927         if (EN && DD==1 && SD==1 && ED==0 && !FULL) (       SRC +=> (DST +: DAT))␣
     ↪= (T_RISE_MIN:T_RISE_TYP:T_RISE_MAX, T_FALL_MIN:T_FALL_TYP:T_FALL_MAX);
```

(continues on next page)

(continued from previous page)

```
1928         if (EN && DD==1 && SD==1 && ED==0 &&  FULL) (        SRC +*> (DST +: DAT))␣
     ↪= (T_RISE_MIN:T_RISE_TYP:T_RISE_MAX, T_FALL_MIN:T_FALL_TYP:T_FALL_MAX);
1929         if (EN && DD==1 && SD==1 && ED==1 && !FULL) (posedge SRC +=> (DST +: DAT))␣
     ↪= (T_RISE_MIN:T_RISE_TYP:T_RISE_MAX, T_FALL_MIN:T_FALL_TYP:T_FALL_MAX);
1930         if (EN && DD==1 && SD==1 && ED==1 &&  FULL) (posedge SRC +*> (DST +: DAT))␣
     ↪= (T_RISE_MIN:T_RISE_TYP:T_RISE_MAX, T_FALL_MIN:T_FALL_TYP:T_FALL_MAX);
1931         if (EN && DD==1 && SD==1 && ED==2 && !FULL) (negedge SRC +=> (DST +: DAT))␣
     ↪= (T_RISE_MIN:T_RISE_TYP:T_RISE_MAX, T_FALL_MIN:T_FALL_TYP:T_FALL_MAX);
1932         if (EN && DD==1 && SD==1 && ED==2 &&  FULL) (negedge SRC +*> (DST +: DAT))␣
     ↪= (T_RISE_MIN:T_RISE_TYP:T_RISE_MAX, T_FALL_MIN:T_FALL_TYP:T_FALL_MAX);
1933
1934         if (EN && DD==1 && SD==2 && ED==0 && !FULL) (        SRC -=> (DST +: DAT))␣
     ↪= (T_RISE_MIN:T_RISE_TYP:T_RISE_MAX, T_FALL_MIN:T_FALL_TYP:T_FALL_MAX);
1935         if (EN && DD==1 && SD==2 && ED==0 &&  FULL) (        SRC -*> (DST +: DAT))␣
     ↪= (T_RISE_MIN:T_RISE_TYP:T_RISE_MAX, T_FALL_MIN:T_FALL_TYP:T_FALL_MAX);
1936         if (EN && DD==1 && SD==2 && ED==1 && !FULL) (posedge SRC -=> (DST +: DAT))␣
     ↪= (T_RISE_MIN:T_RISE_TYP:T_RISE_MAX, T_FALL_MIN:T_FALL_TYP:T_FALL_MAX);
1937         if (EN && DD==1 && SD==2 && ED==1 &&  FULL) (posedge SRC -*> (DST +: DAT))␣
     ↪= (T_RISE_MIN:T_RISE_TYP:T_RISE_MAX, T_FALL_MIN:T_FALL_TYP:T_FALL_MAX);
1938         if (EN && DD==1 && SD==2 && ED==2 && !FULL) (negedge SRC -=> (DST +: DAT))␣
     ↪= (T_RISE_MIN:T_RISE_TYP:T_RISE_MAX, T_FALL_MIN:T_FALL_TYP:T_FALL_MAX);
1939         if (EN && DD==1 && SD==2 && ED==2 &&  FULL) (negedge SRC -*> (DST +: DAT))␣
     ↪= (T_RISE_MIN:T_RISE_TYP:T_RISE_MAX, T_FALL_MIN:T_FALL_TYP:T_FALL_MAX);
1940
1941         // DD=2
1942
1943         if (EN && DD==2 && SD==0 && ED==0 && !FULL) (        SRC  => (DST -: DAT))␣
     ↪= (T_RISE_MIN:T_RISE_TYP:T_RISE_MAX, T_FALL_MIN:T_FALL_TYP:T_FALL_MAX);
1944         if (EN && DD==2 && SD==0 && ED==0 &&  FULL) (        SRC  *> (DST -: DAT))␣
     ↪= (T_RISE_MIN:T_RISE_TYP:T_RISE_MAX, T_FALL_MIN:T_FALL_TYP:T_FALL_MAX);
1945         if (EN && DD==2 && SD==0 && ED==1 && !FULL) (posedge SRC  => (DST -: DAT))␣
     ↪= (T_RISE_MIN:T_RISE_TYP:T_RISE_MAX, T_FALL_MIN:T_FALL_TYP:T_FALL_MAX);
1946         if (EN && DD==2 && SD==0 && ED==1 &&  FULL) (posedge SRC  *> (DST -: DAT))␣
     ↪= (T_RISE_MIN:T_RISE_TYP:T_RISE_MAX, T_FALL_MIN:T_FALL_TYP:T_FALL_MAX);
1947         if (EN && DD==2 && SD==0 && ED==2 && !FULL) (negedge SRC  => (DST -: DAT))␣
     ↪= (T_RISE_MIN:T_RISE_TYP:T_RISE_MAX, T_FALL_MIN:T_FALL_TYP:T_FALL_MAX);
1948         if (EN && DD==2 && SD==0 && ED==2 &&  FULL) (negedge SRC  *> (DST -: DAT))␣
     ↪= (T_RISE_MIN:T_RISE_TYP:T_RISE_MAX, T_FALL_MIN:T_FALL_TYP:T_FALL_MAX);
1949
1950         if (EN && DD==2 && SD==1 && ED==0 && !FULL) (        SRC +=> (DST -: DAT))␣
     ↪= (T_RISE_MIN:T_RISE_TYP:T_RISE_MAX, T_FALL_MIN:T_FALL_TYP:T_FALL_MAX);
1951         if (EN && DD==2 && SD==1 && ED==0 &&  FULL) (        SRC +*> (DST -: DAT))␣
     ↪= (T_RISE_MIN:T_RISE_TYP:T_RISE_MAX, T_FALL_MIN:T_FALL_TYP:T_FALL_MAX);
1952         if (EN && DD==2 && SD==1 && ED==1 && !FULL) (posedge SRC +=> (DST -: DAT))␣
     ↪= (T_RISE_MIN:T_RISE_TYP:T_RISE_MAX, T_FALL_MIN:T_FALL_TYP:T_FALL_MAX);
1953         if (EN && DD==2 && SD==1 && ED==1 &&  FULL) (posedge SRC +*> (DST -: DAT))␣
     ↪= (T_RISE_MIN:T_RISE_TYP:T_RISE_MAX, T_FALL_MIN:T_FALL_TYP:T_FALL_MAX);
1954         if (EN && DD==2 && SD==1 && ED==2 && !FULL) (negedge SRC +=> (DST -: DAT))␣
     ↪= (T_RISE_MIN:T_RISE_TYP:T_RISE_MAX, T_FALL_MIN:T_FALL_TYP:T_FALL_MAX);
1955         if (EN && DD==2 && SD==1 && ED==2 &&  FULL) (negedge SRC +*> (DST -: DAT))␣
     ↪= (T_RISE_MIN:T_RISE_TYP:T_RISE_MAX, T_FALL_MIN:T_FALL_TYP:T_FALL_MAX);
1956
```

(continues on next page)

(continued from previous page)

```
1957         if (EN && DD==2 && SD==2 && ED==0 && !FULL) (        SRC -=> (DST -: DAT))␣
     ↪= (T_RISE_MIN:T_RISE_TYP:T_RISE_MAX, T_FALL_MIN:T_FALL_TYP:T_FALL_MAX);
1958         if (EN && DD==2 && SD==2 && ED==0 &&  FULL) (        SRC -*> (DST -: DAT))␣
     ↪= (T_RISE_MIN:T_RISE_TYP:T_RISE_MAX, T_FALL_MIN:T_FALL_TYP:T_FALL_MAX);
1959         if (EN && DD==2 && SD==2 && ED==1 && !FULL) (posedge SRC -=> (DST -: DAT))␣
     ↪= (T_RISE_MIN:T_RISE_TYP:T_RISE_MAX, T_FALL_MIN:T_FALL_TYP:T_FALL_MAX);
1960         if (EN && DD==2 && SD==2 && ED==1 &&  FULL) (posedge SRC -*> (DST -: DAT))␣
     ↪= (T_RISE_MIN:T_RISE_TYP:T_RISE_MAX, T_FALL_MIN:T_FALL_TYP:T_FALL_MAX);
1961         if (EN && DD==2 && SD==2 && ED==2 && !FULL) (negedge SRC -=> (DST -: DAT))␣
     ↪= (T_RISE_MIN:T_RISE_TYP:T_RISE_MAX, T_FALL_MIN:T_FALL_TYP:T_FALL_MAX);
1962         if (EN && DD==2 && SD==2 && ED==2 &&  FULL) (negedge SRC -*> (DST -: DAT))␣
     ↪= (T_RISE_MIN:T_RISE_TYP:T_RISE_MAX, T_FALL_MIN:T_FALL_TYP:T_FALL_MAX);
1963     endspecify
1964     `endif
1965
1966 endmodule
```

```
yosys> help $specrule
```

Properties

is_evaluable

Simulation model (verilog)

Listing 9.79: simlib.v

```
1971 module \$specrule (EN_SRC, EN_DST, SRC, DST);
1972
1973     parameter TYPE = "";
1974     parameter T_LIMIT = 0;
1975     parameter T_LIMIT2 = 0;
1976
1977     parameter SRC_WIDTH = 1;
1978     parameter DST_WIDTH = 1;
1979
1980     parameter SRC_PEN = 0;
1981     parameter SRC_POL = 0;
1982
1983     parameter DST_PEN = 0;
1984     parameter DST_POL = 0;
1985
1986     input EN_SRC, EN_DST;
1987     input [SRC_WIDTH-1:0] SRC;
1988     input [DST_WIDTH-1:0] DST;
1989
1990     `ifdef SIMLIB_SPECIFY
1991     specify
1992         // TBD
1993     endspecify
1994     `endif
1995
1996 endmodule
```

9.1.10 Formal verification cells

Note

Some front-ends may not support the generic *$check* cell, in such cases calling `chformal -lower` will convert each *$check* cell into it's equivalent. See *chformal* for more.

Todo

Describe formal cells

$check, *$assert*, *$assume*, *$live*, *$fair*, *$cover*, *$equiv*, *$initstate*, *$anyconst*, *$anyseq*, *$anyinit*, *$allconst*, and *$allseq*.

Also *$ff* and *$_FF_* cells.

```
yosys> help $allconst
```

Properties

is_evaluable

Simulation model (verilog)

Listing 9.80: simlib.v

```
2175 module \$allconst (Y);
2176
2177     parameter WIDTH = 0;
2178
2179     output [WIDTH-1:0] Y;
2180
2181     assign Y = 'bx;
2182
2183 endmodule
```

```
yosys> help $allseq
```

Properties

is_evaluable

Simulation model (verilog)

Listing 9.81: simlib.v

```
2188 module \$allseq (Y);
2189
2190     parameter WIDTH = 0;
2191
2192     output [WIDTH-1:0] Y;
2193
2194     assign Y = 'bx;
2195
2196 endmodule
```

```
yosys> help $anyconst
```

Properties

is_evaluable

Simulation model (verilog)

Listing 9.82: simlib.v

```
2128 module \$anyconst (Y);
2129
2130     parameter WIDTH = 0;
2131
2132     output [WIDTH-1:0] Y;
2133
2134     assign Y = 'bx;
2135
2136 endmodule
```

```
yosys> help $anyinit
```

Simulation model (verilog)

Listing 9.83: simlib.v

```
2157 module \$anyinit (D, Q);
2158
2159     parameter WIDTH = 0;
2160
2161     input [WIDTH-1:0] D;
2162     output reg [WIDTH-1:0] Q;
2163
2164     initial Q <= 'bx;
2165
2166     always @(`SIMLIB_GLOBAL_CLOCK) begin
2167         Q <= D;
2168     end
2169
2170 endmodule
```

```
yosys> help $anyseq
```

Properties

is_evaluable

Simulation model (verilog)

Listing 9.84: simlib.v

```
2141 module \$anyseq (Y);
2142
2143     parameter WIDTH = 0;
2144
2145     output [WIDTH-1:0] Y;
2146
```

(continues on next page)

(continued from previous page)

```
2147     assign Y = 'bx;
2148
2149 endmodule
```

yosys> help $assert

Properties

is_evaluable

Simulation model (verilog)

Listing 9.85: simlib.v

```
2047 module \$assert (A, EN);
2048
2049     input A, EN;
2050
2051     `ifndef SIMLIB_NOCHECKS
2052     always @* begin
2053         if (A !== 1'b1 && EN === 1'b1) begin
2054             $display("Assertion %m failed!");
2055             $stop;
2056         end
2057     end
2058     `endif
2059
2060 endmodule
```

yosys> help $assume

Properties

is_evaluable

Simulation model (verilog)

Listing 9.86: simlib.v

```
2065 module \$assume (A, EN);
2066
2067     input A, EN;
2068
2069     `ifndef SIMLIB_NOCHECKS
2070     always @* begin
2071         if (A !== 1'b1 && EN === 1'b1) begin
2072             $display("Assumption %m failed!");
2073             $stop;
2074         end
2075     end
2076     `endif
2077
2078 endmodule
```

yosys> help $cover

Properties

is_evaluable

Simulation model (verilog)

Listing 9.87: simlib.v

```
module \$cover (A, EN);

    input A, EN;

endmodule
```

yosys> help $equiv

Properties

is_evaluable

Simulation model (verilog)

Listing 9.88: simlib.v

```
module \$equiv (A, B, Y);

    input A, B;
    output Y;

    assign Y = (A !== 1'bx && A !== B) ? 1'bx : A;

    `ifndef SIMLIB_NOCHECKS
    always @* begin
        if (A !== 1'bx && A !== B) begin
            $display("Equivalence failed!");
            $stop;
        end
    end
    `endif

endmodule
```

yosys> help $fair

Properties

is_evaluable

Simulation model (verilog)

Listing 9.89: simlib.v

```
module \$fair (A, EN);

    input A, EN;

endmodule
```

yosys> help $ff

Simulation model (verilog)

Listing 9.90: simlib.v

```
2298 module \$ff (D, Q);
2299
2300     parameter WIDTH = 0;
2301
2302     input [WIDTH-1:0] D;
2303     output reg [WIDTH-1:0] Q;
2304
2305     always @(`SIMLIB_GLOBAL_CLOCK) begin
2306         Q <= D;
2307     end
2308
2309 endmodule
```

yosys> help $initstate

Properties

is_evaluable

Simulation model (verilog)

Listing 9.91: simlib.v

```
2110 module \$initstate (Y);
2111
2112     output reg Y = 1;
2113     reg [3:0] cnt = 1;
2114     reg trig = 0;
2115
2116     initial trig <= 1;
2117
2118     always @(cnt, trig) begin
2119         Y <= |cnt;
2120         cnt <= cnt + |cnt;
2121     end
2122
2123 endmodule
```

yosys> help $live

Properties

is_evaluable

Simulation model (verilog)

Listing 9.92: simlib.v

```
2083 module \$live (A, EN);
2084
2085     input A, EN;
2086
2087 endmodule
```

Formal support cells

```
yosys> help $future_ff
```

Simulation model (verilog)

Listing 9.93: simlib.v

```
3200 module \$future_ff (A, Y);
3201
3202     parameter WIDTH = 0;
3203
3204     input [WIDTH-1:0] A;
3205     output [WIDTH-1:0] Y;
3206
3207     assign Y = A;
3208
3209 endmodule
```

```
yosys> help $get_tag
```

Simulation model (verilog)

Listing 9.94: simlib.v

```
3159 module \$get_tag (A, Y);
3160
3161     parameter TAG = "";
3162     parameter WIDTH = 0;
3163
3164     input [WIDTH-1:0] A;
3165     output [WIDTH-1:0] Y;
3166
3167     assign Y = A;
3168
3169 endmodule
```

```
yosys> help $original_tag
```

Simulation model (verilog)

Listing 9.95: simlib.v

```
3186 module \$original_tag (A, Y);
3187
3188     parameter TAG = "";
3189     parameter WIDTH = 0;
3190
3191     input [WIDTH-1:0] A;
3192     output [WIDTH-1:0] Y;
3193
3194     assign Y = A;
3195
3196 endmodule
```

```
yosys> help $overwrite_tag

    Simulation model (verilog)
```

Listing 9.96: simlib.v

```
3173 module \$overwrite_tag (A, SET, CLR);
3174
3175     parameter TAG = "";
3176     parameter WIDTH = 0;
3177
3178     input [WIDTH-1:0] A;
3179     input [WIDTH-1:0] SET;
3180     input [WIDTH-1:0] CLR;
3181
3182 endmodule
```

```
yosys> help $set_tag

    Simulation model (verilog)
```

Listing 9.97: simlib.v

```
3143 module \$set_tag (A, SET, CLR, Y);
3144
3145     parameter TAG = "";
3146     parameter WIDTH = 0;
3147
3148     input [WIDTH-1:0] A;
3149     input [WIDTH-1:0] SET;
3150     input [WIDTH-1:0] CLR;
3151     output [WIDTH-1:0] Y;
3152
3153     assign Y = A;
3154
3155 endmodule
```

9.1.11 Debugging cells

The *$print* cell is used to log the values of signals, akin to (and translatable to) the `$display` and `$write` family of tasks in Verilog. It has the following parameters:

`FORMAT`
: The internal format string. The syntax is described below.

`ARGS_WIDTH`
: The width (in bits) of the signal on the `ARGS` port.

`TRG_ENABLE`
: True if triggered on specific signals defined in `TRG`; false if triggered whenever `ARGS` or `EN` change and `EN` is 1.

If `TRG_ENABLE` is true, the following parameters also apply:

`TRG_WIDTH`
: The number of bits in the `TRG` port.

TRG_POLARITY
: For each bit in TRG, 1 if that signal is positive-edge triggered, 0 if negative-edge triggered.

PRIORITY
: When multiple *$print* or *$check* cells fire on the same trigger, they execute in descending priority order.

Ports:

TRG
: The signals that control when this *$print* cell is triggered.

  If the width of this port is zero and TRG_ENABLE is true, the cell is triggered during initial evaluation (time zero) only.

EN
: Enable signal for the whole cell.

ARGS
: The values to be displayed, in format string order.

```
yosys> help $check
```

```
    Simulation model (verilog)
```

Listing 9.98: simlib.v

```
2242 module \$check (A, EN, TRG, ARGS);
2243
2244     parameter FLAVOR = "";
2245     parameter PRIORITY = 0;
2246
2247     parameter FORMAT = "";
2248     parameter ARGS_WIDTH = 0;
2249
2250     parameter TRG_ENABLE = 1;
2251     parameter TRG_WIDTH = 0;
2252     parameter TRG_POLARITY = 0;
2253
2254     input A;
2255     input EN;
2256     input [TRG_WIDTH-1:0] TRG;
2257     input [ARGS_WIDTH-1:0] ARGS;
2258
2259 endmodule
```

```
yosys> help $print
```

```
    Simulation model (verilog)
```

Listing 9.99: simlib.v

```
2222 module \$print (EN, TRG, ARGS);
2223
2224     parameter PRIORITY = 0;
2225
```

(continues on next page)

(continued from previous page)

```
2226      parameter FORMAT = "";
2227      parameter signed ARGS_WIDTH = 0;
2228
2229      parameter TRG_ENABLE = 1;
2230      parameter signed TRG_WIDTH = 0;
2231      parameter TRG_POLARITY = 0;
2232
2233      input EN;
2234      input [TRG_WIDTH-1:0] TRG;
2235      input [ARGS_WIDTH-1:0] ARGS;
2236
2237  endmodule
```

```
yosys> help $scopeinfo

    Simulation model (verilog)
```

Listing 9.100: simlib.v

```
3214  module \$scopeinfo ();
3215
3216      parameter TYPE = "";
3217
3218  endmodule
```

Format string syntax

The format string syntax resembles Python f-strings. Regular text is passed through unchanged until a format specifier is reached, starting with a `{`.

Format specifiers have the following syntax. Unless noted, all items are required:

`{`
: Denotes the start of the format specifier.

size
: Signal size in bits; this many bits are consumed from the `ARGS` port by this specifier.

`:`
: Separates the size from the remaining items.

justify
: `>` for right-justified, `<` for left-justified.

padding
: `0` for zero-padding, or a space for space-padding.

width*?*
: (optional) The number of characters wide to pad to.

base

- `b` for base-2 integers (binary)
- `o` for base-8 integers (octal)
- `d` for base-10 integers (decimal)
- `h` for base-16 integers (hexadecimal)

- `c` for ASCII characters/strings
- `t` and `r` for simulation time (corresponding to `$time` and `$realtime`)

For integers, this item may follow:

`+?`
: (optional, decimals only) Include a leading plus for non-negative numbers. This can assist with symmetry with negatives in tabulated output.

signedness
: `u` for unsigned, `s` for signed. This distinction is only respected when rendering decimals.

ASCII characters/strings have no special options, but the signal size must be divisible by 8.

For simulation time, the signal size must be zero.

Finally:

`}`
: Denotes the end of the format specifier.

Some example format specifiers:

- `{8:>02hu}` - 8-bit unsigned integer rendered as hexadecimal, right-justified, zero-padded to 2 characters wide.
- `{32:< 15d+s}` - 32-bit signed integer rendered as decimal, left-justified, space-padded to 15 characters wide, positive values prefixed with `+`.
- `{16:< 10hu}` - 16-bit unsigned integer rendered as hexadecimal, left-justified, space-padded to 10 characters wide.
- `{0:>010t}` - simulation time, right-justified, zero-padded to 10 characters wide.

To include literal `{` and `}` characters in your format string, use `{{` and `}}` respectively.

It is an error for a format string to consume more or less bits from `ARGS` than the port width.

Values are never truncated, regardless of the specified width.

Note that further restrictions on allowable combinations of options may apply depending on the backend used.

For example, Verilog does not have a format specifier that allows zero-padding a string (i.e. more than 1 ASCII character), though zero-padding a single character is permitted.

Thus, while the RTLIL format specifier `{8:>02c}` translates to `%02c`, `{16:>02c}` cannot be represented in Verilog and will fail to emit. In this case, `{16:> 02c}` must be used, which translates to `%2s`.

9.1.12 Wire cells

Todo

Add information about *`$slice`* and *`$concat`* cells.

`yosys> help $concat`
: Concatenation of inputs into a single output (Y = {B, A}).

  Properties
  `is_evaluable`

Simulation model (verilog)

Listing 9.101: simlib.v

```
1617 module \$concat (A, B, Y);
1618
1619     parameter A_WIDTH = 0;
1620     parameter B_WIDTH = 0;
1621
1622     input [A_WIDTH-1:0] A;
1623     input [B_WIDTH-1:0] B;
1624     output [A_WIDTH+B_WIDTH-1:0] Y;
1625
1626     assign Y = {B, A};
1627
1628 endmodule
```

yosys> help $slice

Properties

is_evaluable

Simulation model (verilog)

Listing 9.102: simlib.v

```
1596 module \$slice (A, Y);
1597
1598     parameter OFFSET = 0;
1599     parameter A_WIDTH = 0;
1600     parameter Y_WIDTH = 0;
1601
1602     input [A_WIDTH-1:0] A;
1603     output [Y_WIDTH-1:0] Y;
1604
1605     assign Y = A >> OFFSET;
1606
1607 endmodule
```

9.2 Gate-level cells

For gate level logic networks, fixed function single bit cells are used that do not provide any parameters.

Simulation models for these cells can be found in the file `techlibs/common/simcells.v` in the Yosys source tree.

In most cases gate level logic networks are created from RTL networks using the techmap pass. The flip-flop cells from the gate level logic network can be mapped to physical flip-flop cells from a Liberty file using the dfflibmap pass. The combinatorial logic cells can be mapped to physical cells from a Liberty file via ABC using the abc pass.

9.2.1 Combinatorial cells (simple)

Table 9.4: Cell types for gate level combinatorial cells (simple)

Verilog	Cell Type
`Y = A`	*$_BUF_*
`Y = ~A`	*$_NOT_*
`Y = A & B`	*$_AND_*
`Y = ~(A & B)`	*$_NAND_*
`Y = A | B`	*$_OR_*
`Y = ~(A | B)`	*$_NOR_*
`Y = A ^ B`	*$_XOR_*
`Y = ~(A ^ B)`	*$_XNOR_*
`Y = S ? B : A`	*$_MUX_*

yosys> help $_AND_

A 2-input AND gate.

```
Truth table:    A B | Y
               -----+---
                0 0 | 0
                0 1 | 0
                1 0 | 0
                1 1 | 1
```

Properties

is_evaluable

Simulation model (verilog)

Listing 9.103: simcells.v

```
78 module \$_AND_ (A, B, Y);
79     input A, B;
80     output Y;
81     assign Y = A & B;
82 endmodule
```

yosys> help $_BUF_

A buffer. This cell type is always optimized away by the opt_clean pass.

```
Truth table:    A | Y
               ---+---
                0 | 0
                1 | 1
```

Properties

is_evaluable

Simulation model (verilog)

Listing 9.104: simcells.v

```
40 module \$_BUF_ (A, Y);
41     input A;
42     output Y;
43     assign Y = A;
44 endmodule
```

yosys> help $_MUX_

A 2-input MUX gate.

```
Truth table:    A B S | Y
               -------+---
                a - 0 | a
                - b 1 | b
```

Properties

is_evaluable

Simulation model (verilog)

Listing 9.105: simcells.v

```
236 module \$_MUX_ (A, B, S, Y);
237     input A, B, S;
238     output Y;
239     assign Y = S ? B : A;
240 endmodule
```

yosys> help $_NAND_

A 2-input NAND gate.

```
Truth table:    A B | Y
               -----+---
                0 0 | 1
                0 1 | 1
                1 0 | 1
                1 1 | 0
```

Properties

is_evaluable

Simulation model (verilog)

Listing 9.106: simcells.v

```
98  module \$_NAND_ (A, B, Y);
99      input A, B;
100     output Y;
101     assign Y = ~(A & B);
102 endmodule
```

yosys> help $_NOR_

A 2-input NOR gate.

```
Truth table:    A B | Y
               -----+---
                0 0 | 1
                0 1 | 0
                1 0 | 0
                1 1 | 0
```

Properties

is_evaluable

Simulation model (verilog)

Listing 9.107: simcells.v

```
138 module \$_NOR_ (A, B, Y);
139     input A, B;
140     output Y;
141     assign Y = ~(A | B);
142 endmodule
```

yosys> help $_NOT_

An inverter gate.

```
Truth table:    A | Y
               ---+---
                0 | 1
                1 | 0
```

Properties

is_evaluable

Simulation model (verilog)

Listing 9.108: simcells.v

```
58 module \$_NOT_ (A, Y);
59     input A;
60     output Y;
61     assign Y = ~A;
62 endmodule
```

yosys> help $_OR_

A 2-input OR gate.

```
Truth table:    A B | Y
               -----+---
                0 0 | 0
                0 1 | 1
                1 0 | 1
                1 1 | 1
```

Properties

is_evaluable

Simulation model (verilog)

Listing 9.109: simcells.v

```
118 module \$_OR_ (A, B, Y);
119     input A, B;
120     output Y;
121     assign Y = A | B;
122 endmodule
```

yosys> help $_XNOR_

A 2-input XNOR gate.

```
Truth table:    A B | Y
                ---+---
                0 0 | 1
                0 1 | 0
                1 0 | 0
                1 1 | 1
```

Properties

is_evaluable

Simulation model (verilog)

Listing 9.110: simcells.v

```
178 module \$_XNOR_ (A, B, Y);
179     input A, B;
180     output Y;
181     assign Y = ~(A ^ B);
182 endmodule
```

yosys> help $_XOR_

A 2-input XOR gate.

```
Truth table:    A B | Y
                ---+---
                0 0 | 0
                0 1 | 1
                1 0 | 1
                1 1 | 0
```

Properties

is_evaluable

Simulation model (verilog)

Listing 9.111: simcells.v

```
158 module \$_XOR_ (A, B, Y);
159     input A, B;
160     output Y;
161     assign Y = A ^ B;
162 endmodule
```

9.2.2 Combinatorial cells (combined)

These cells combine two or more combinatorial cells (simple) into a single cell.

Table 9.5: Cell types for gate level combinatorial cells (combined)

Verilog	Cell Type
`Y = A & ~B`	*$_ANDNOT_*
`Y = A | ~B`	*$_ORNOT_*
`Y = ~((A & B) | C)`	*$_AOI3_*
`Y = ~((A | B) & C)`	*$_OAI3_*
`Y = ~((A & B) | (C & D))`	*$_AOI4_*
`Y = ~((A | B) & (C | D))`	*$_OAI4_*
`Y = ~(S ? B : A)`	*$_NMUX_*
(see below)	*$_MUX4_*
(see below)	*$_MUX8_*
(see below)	*$_MUX16_*

The *$_MUX4_* , *$_MUX8_* and *$_MUX16_* cells are used to model wide muxes, and correspond to the following Verilog code:

```
// $_MUX4_
assign Y = T ? (S ? D : C) :
               (S ? B : A);
// $_MUX8_
assign Y = U ? T ? (S ? H : G) :
                   (S ? F : E) :
               T ? (S ? D : C) :
                   (S ? B : A);
// $_MUX16_
assign Y = V ? U ? T ? (S ? P : O) :
                       (S ? N : M) :
                   T ? (S ? L : K) :
                       (S ? J : I) :
               U ? T ? (S ? H : G) :
                       (S ? F : E) :
                   T ? (S ? D : C) :
                       (S ? B : A);
```

```
yosys> help $_ANDNOT_
```

A 2-input AND-NOT gate.

```
Truth table:    A B | Y
               -----+---
                0 0 | 0
                0 1 | 0
                1 0 | 1
                1 1 | 0
```

Properties

is_evaluable

Simulation model (verilog)

Listing 9.112: simcells.v

```
198 module \$_ANDNOT_ (A, B, Y);
199     input A, B;
200     output Y;
201     assign Y = A & (~B);
202 endmodule
```

yosys> help **$_AOI3_**

A 3-input And-Or-Invert gate.

```
Truth table:    A B C | Y
               -------+---
                0 0 0 | 1
                0 0 1 | 0
                0 1 0 | 1
                0 1 1 | 0
                1 0 0 | 1
                1 0 1 | 0
                1 1 0 | 0
                1 1 1 | 0
```

Properties

is_evaluable

Simulation model (verilog)

Listing 9.113: simcells.v

```
367 module \$_AOI3_ (A, B, C, Y);
368     input A, B, C;
369     output Y;
370     assign Y = ~((A & B) | C);
371 endmodule
```

yosys> help **$_AOI4_**

A 4-input And-Or-Invert gate.

```
Truth table:    A B C D | Y
               ---------+---
```

(continues on next page)

(continued from previous page)

```
0 0 0 0 | 1
0 0 0 1 | 1
0 0 1 0 | 1
0 0 1 1 | 0
0 1 0 0 | 1
0 1 0 1 | 1
0 1 1 0 | 1
0 1 1 1 | 0
1 0 0 0 | 1
1 0 0 1 | 1
1 0 1 0 | 1
1 0 1 1 | 0
1 1 0 0 | 0
1 1 0 1 | 0
1 1 1 0 | 0
1 1 1 1 | 0
```

Properties

is_evaluable

Simulation model (verilog)

Listing 9.114: simcells.v

```
module \$_AOI4_ (A, B, C, D, Y);
    input A, B, C, D;
    output Y;
    assign Y = ~((A & B) | (C & D));
endmodule
```

yosys> help **$_MUX16_**

A 16-input MUX gate.

```
Truth table:    A B C D E F G H I J K L M N O P S T U V | Y
               ---------------------------------------+---
               a - - - - - - - - - - - - - - - - 0 0 0 0 | a
               - b - - - - - - - - - - - - - - - 1 0 0 0 | b
               - - c - - - - - - - - - - - - - - 0 1 0 0 | c
               - - - d - - - - - - - - - - - - - 1 1 0 0 | d
               - - - - e - - - - - - - - - - - - 0 0 1 0 | e
               - - - - - f - - - - - - - - - - - 1 0 1 0 | f
               - - - - - - g - - - - - - - - - - 0 1 1 0 | g
               - - - - - - - h - - - - - - - - - 1 1 1 0 | h
               - - - - - - - - i - - - - - - - - 0 0 0 1 | i
               - - - - - - - - - j - - - - - - - 1 0 0 1 | j
               - - - - - - - - - - k - - - - - - 0 1 0 1 | k
               - - - - - - - - - - - l - - - - - 1 1 0 1 | l
               - - - - - - - - - - - - m - - - - 0 0 1 1 | m
               - - - - - - - - - - - - - n - - - 1 0 1 1 | n
               - - - - - - - - - - - - - - o - - 0 1 1 1 | o
               - - - - - - - - - - - - - - - p - 1 1 1 1 | p
```

Properties

is_evaluable

Simulation model (verilog)

Listing 9.115: simcells.v

```
336 module \$_MUX16_ (A, B, C, D, E, F, G, H, I, J, K, L, M, N, O, P, S, T, U, V, Y);
337     input A, B, C, D, E, F, G, H, I, J, K, L, M, N, O, P, S, T, U, V;
338     output Y;
339     assign Y = V ? U ? T ? (S ? P : O) :
340                            (S ? N : M) :
341                        T ? (S ? L : K) :
342                            (S ? J : I) :
343                    U ? T ? (S ? H : G) :
344                            (S ? F : E) :
345                        T ? (S ? D : C) :
346                            (S ? B : A);
347 endmodule
```

yosys> help $_MUX4_

A 4-input MUX gate.

```
Truth table:    A B C D S T | Y
                ------------+---
                a - - - 0 0 | a
                - b - - 1 0 | b
                - - c - 0 1 | c
                - - - d 1 1 | d
```

Properties

is_evaluable

Simulation model (verilog)

Listing 9.116: simcells.v

```
276 module \$_MUX4_ (A, B, C, D, S, T, Y);
277     input A, B, C, D, S, T;
278     output Y;
279     assign Y = T ? (S ? D : C) :
280                    (S ? B : A);
281 endmodule
```

yosys> help $_MUX8_

An 8-input MUX gate.

```
Truth table:    A B C D E F G H S T U | Y
                ----------------------+---
                a - - - - - - - 0 0 0 | a
                - b - - - - - - 1 0 0 | b
                - - c - - - - - 0 1 0 | c
                - - - d - - - - 1 1 0 | d
```

(continues on next page)

(continued from previous page)

```
                - - - - e - - - 0 0 1 | e
                - - - - - f - - 1 0 1 | f
                - - - - - - - g - 0 1 1 | g
                - - - - - - - - h 1 1 1 | h
```

Properties

is_evaluable

Simulation model (verilog)

Listing 9.117: simcells.v

```
301 module \$_MUX8_ (A, B, C, D, E, F, G, H, S, T, U, Y);
302     input A, B, C, D, E, F, G, H, S, T, U;
303     output Y;
304     assign Y = U ? T ? (S ? H : G) :
305                        (S ? F : E) :
306                    T ? (S ? D : C) :
307                        (S ? B : A);
308 endmodule
```

yosys> help $_NMUX_

A 2-input inverting MUX gate.

```
Truth table:    A B S | Y
                -------+---
                0 - 0 | 1
                1 - 0 | 0
                - 0 1 | 1
                - 1 1 | 0
```

Properties

is_evaluable

Simulation model (verilog)

Listing 9.118: simcells.v

```
256 module \$_NMUX_ (A, B, S, Y);
257     input A, B, S;
258     output Y;
259     assign Y = S ? !B : !A;
260 endmodule
```

yosys> help $_OAI3_

A 3-input Or-And-Invert gate.

```
Truth table:    A B C | Y
                -------+---
                0 0 0 | 1
                0 0 1 | 1
```

(continues on next page)

(continued from previous page)

```
                0 1 0 | 1
                0 1 1 | 0
                1 0 0 | 1
                1 0 1 | 0
                1 1 0 | 1
                1 1 1 | 0
```

Properties

is_evaluable

Simulation model (verilog)

Listing 9.119: simcells.v

```
391 module \$_OAI3_ (A, B, C, Y);
392     input A, B, C;
393     output Y;
394     assign Y = ~((A | B) & C);
395 endmodule
```

yosys> help $_OAI4_

A 4-input Or-And-Invert gate.

```
Truth table:    A B C D | Y
                ---------+---
                0 0 0 0 | 1
                0 0 0 1 | 1
                0 0 1 0 | 1
                0 0 1 1 | 1
                0 1 0 0 | 1
                0 1 0 1 | 0
                0 1 1 0 | 0
                0 1 1 1 | 0
                1 0 0 0 | 1
                1 0 0 1 | 0
                1 0 1 0 | 0
                1 0 1 1 | 0
                1 1 0 0 | 1
                1 1 0 1 | 0
                1 1 1 0 | 0
                1 1 1 1 | 0
```

Properties

is_evaluable

Simulation model (verilog)

Listing 9.120: simcells.v

```
455 module \$_OAI4_ (A, B, C, D, Y);
456     input A, B, C, D;
```

(continues on next page)

(continued from previous page)

```
457     output Y;
458     assign Y = ~((A | B) & (C | D));
459 endmodule
```

```
yosys> help $_ORNOT_
```

A 2-input OR-NOT gate.

```
Truth table:    A B | Y
               -----+---
                0 0 | 1
                0 1 | 0
                1 0 | 1
                1 1 | 1
```

Properties

is_evaluable

Simulation model (verilog)

Listing 9.121: simcells.v

```
218 module \$_ORNOT_ (A, B, Y);
219     input A, B;
220     output Y;
221     assign Y = A | (~B);
222 endmodule
```

9.2.3 Flip-flop cells

The cell types *$_DFF_N_* and *$_DFF_P_* represent d-type flip-flops.

Table 9.6: Cell types for basic flip-flops

Verilog	Cell Type
`always @(negedge C) Q <= D`	*$_DFF_N_*
`always @(posedge C) Q <= D`	*$_DFF_P_*

The cell types `$_DFFE_[NP][NP]_` implement d-type flip-flops with enable. The values in the table for these cell types relate to the following Verilog code template.

```
always @(CLK_EDGE C)
   if (EN == EN_LVL)
      Q <= D;
```

Table 9.7: Cell types for gate level logic networks (FFs with enable)

ClkEdge	*EnLvl*	Cell Type
negedge	0	*$_DFFE_NN_*
negedge	1	*$_DFFE_NP_*
posedge	0	*$_DFFE_PN_*
posedge	1	*$_DFFE_PP_*

The cell types `$_DFF_[NP][NP][01]_` implement d-type flip-flops with asynchronous reset. The values in the table for these cell types relate to the following Verilog code template, where `RST_EDGE` is `posedge` if `RST_LVL` if `1`, and `negedge` otherwise.

```
always @(CLK_EDGE C, RST_EDGE R)
   if (R == RST_LVL)
      Q <= RST_VAL;
   else
      Q <= D;
```

The cell types `$_SDFF_[NP][NP][01]_` implement d-type flip-flops with synchronous reset. The values in the table for these cell types relate to the following Verilog code template:

```
always @(CLK_EDGE C)
   if (R == RST_LVL)
      Q <= RST_VAL;
   else
      Q <= D;
```

Table 9.8: Cell types for gate level logic networks (FFs with reset)

ClkEdge	*RstLvl*	*RstVal*	Cell Type
negedge	0	0	*$_DFF_NN0_* , *$_SDFF_NN0_*
negedge	0	1	*$_DFF_NN1_* , *$_SDFF_NN1_*
negedge	1	0	*$_DFF_NP0_* , *$_SDFF_NP0_*
negedge	1	1	*$_DFF_NP1_* , *$_SDFF_NP1_*
posedge	0	0	*$_DFF_PN0_* , *$_SDFF_PN0_*
posedge	0	1	*$_DFF_PN1_* , *$_SDFF_PN1_*
posedge	1	0	*$_DFF_PP0_* , *$_SDFF_PP0_*
posedge	1	1	*$_DFF_PP1_* , *$_SDFF_PP1_*

The cell types `$_DFFE_[NP][NP][01][NP]_` implement d-type flip-flops with asynchronous reset and enable. The values in the table for these cell types relate to the following Verilog code template, where `RST_EDGE` is `posedge` if `RST_LVL` if `1`, and `negedge` otherwise.

```
always @(CLK_EDGE C, RST_EDGE R)
   if (R == RST_LVL)
      Q <= RST_VAL;
   else if (EN == EN_LVL)
      Q <= D;
```

The cell types `$_SDFFE_[NP][NP][01][NP]_` implement d-type flip-flops with synchronous reset and enable, with reset having priority over enable. The values in the table for these cell types relate to the following Verilog code template:

```
always @(CLK_EDGE C)
   if (R == RST_LVL)
      Q <= RST_VAL;
   else if (EN == EN_LVL)
      Q <= D;
```

The cell types `$_SDFFCE_[NP][NP][01][NP]_` implement d-type flip-flops with synchronous reset and enable, with enable having priority over reset. The values in the table for these cell types relate to the following Verilog code template:

```
always @(CLK_EDGE C)
   if (EN == EN_LVL)
      if (R == RST_LVL)
         Q <= RST_VAL;
      else
         Q <= D;
```

Table 9.9: Cell types for gate level logic networks (FFs with reset and enable)

ClkEdge	*RstLvl*	*RstVal*	*EnLvl*	Cell Type
negedge	0	0	0	*$_DFFE_NN0N_* , *$_SDFFE_NN0N_* , *$_SDFFCE_NN0N_*
negedge	0	0	1	*$_DFFE_NN0P_* , *$_SDFFE_NN0P_* , *$_SDFFCE_NN0P_*
negedge	0	1	0	*$_DFFE_NN1N_* , *$_SDFFE_NN1N_* , *$_SDFFCE_NN1N_*
negedge	0	1	1	*$_DFFE_NN1P_* , *$_SDFFE_NN1P_* , *$_SDFFCE_NN1P_*
negedge	1	0	0	*$_DFFE_NP0N_* , *$_SDFFE_NP0N_* , *$_SDFFCE_NP0N_*
negedge	1	0	1	*$_DFFE_NP0P_* , *$_SDFFE_NP0P_* , *$_SDFFCE_NP0P_*
negedge	1	1	0	*$_DFFE_NP1N_* , *$_SDFFE_NP1N_* , *$_SDFFCE_NP1N_*
negedge	1	1	1	*$_DFFE_NP1P_* , *$_SDFFE_NP1P_* , *$_SDFFCE_NP1P_*
posedge	0	0	0	*$_DFFE_PN0N_* , *$_SDFFE_PN0N_* , *$_SDFFCE_PN0N_*
posedge	0	0	1	*$_DFFE_PN0P_* , *$_SDFFE_PN0P_* , *$_SDFFCE_PN0P_*
posedge	0	1	0	*$_DFFE_PN1N_* , *$_SDFFE_PN1N_* , *$_SDFFCE_PN1N_*
posedge	0	1	1	*$_DFFE_PN1P_* , *$_SDFFE_PN1P_* , *$_SDFFCE_PN1P_*
posedge	1	0	0	*$_DFFE_PP0N_* , *$_SDFFE_PP0N_* , *$_SDFFCE_PP0N_*
posedge	1	0	1	*$_DFFE_PP0P_* , *$_SDFFE_PP0P_* , *$_SDFFCE_PP0P_*
posedge	1	1	0	*$_DFFE_PP1N_* , *$_SDFFE_PP1N_* , *$_SDFFCE_PP1N_*
posedge	1	1	1	*$_DFFE_PP1P_* , *$_SDFFE_PP1P_* , *$_SDFFCE_PP1P_*

The cell types `$_DFFSR_[NP][NP][NP]_` implement d-type flip-flops with asynchronous set and reset. The values in the table for these cell types relate to the following Verilog code template, where `RST_EDGE` is `posedge` if `RST_LVL` if `1`, `negedge` otherwise, and `SET_EDGE` is `posedge` if `SET_LVL` if `1`, `negedge` otherwise.

```
always @(CLK_EDGE C, RST_EDGE R, SET_EDGE S)
   if (R == RST_LVL)
      Q <= 0;
   else if (S == SET_LVL)
      Q <= 1;
   else
      Q <= D;
```

Table 9.10: Cell types for gate level logic networks (FFs with set and reset)

ClkEdge	*SetLvl*	*RstLvl*	Cell Type
negedge	0	0	*$_DFFSR_NNN_*
negedge	0	1	*$_DFFSR_NNP_*
negedge	1	0	*$_DFFSR_NPN_*
negedge	1	1	*$_DFFSR_NPP_*
posedge	0	0	*$_DFFSR_PNN_*
posedge	0	1	*$_DFFSR_PNP_*
posedge	1	0	*$_DFFSR_PPN_*
posedge	1	1	*$_DFFSR_PPP_*

The cell types `$_DFFSRE_[NP][NP][NP][NP]_` implement d-type flip-flops with asynchronous set and reset and enable. The values in the table for these cell types relate to the following Verilog code template, where `RST_EDGE` is `posedge` if `RST_LVL` if `1`, `negedge` otherwise, and `SET_EDGE` is `posedge` if `SET_LVL` if `1`, `negedge` otherwise.

```
always @(CLK_EDGE C, RST_EDGE R, SET_EDGE S)
   if (R == RST_LVL)
      Q <= 0;
   else if (S == SET_LVL)
      Q <= 1;
   else if (E == EN_LVL)
      Q <= D;
```

Table 9.11: Cell types for gate level logic networks (FFs with set and reset and enable)

ClkEdge	*SetLvl*	*RstLvl*	*EnLvl*	Cell Type
negedge	0	0	0	*$_DFFSRE_NNNN_*
negedge	0	0	1	*$_DFFSRE_NNNP_*
negedge	0	1	0	*$_DFFSRE_NNPN_*
negedge	0	1	1	*$_DFFSRE_NNPP_*
negedge	1	0	0	*$_DFFSRE_NPNN_*
negedge	1	0	1	*$_DFFSRE_NPNP_*
negedge	1	1	0	*$_DFFSRE_NPPN_*
negedge	1	1	1	*$_DFFSRE_NPPP_*
posedge	0	0	0	*$_DFFSRE_PNNN_*
posedge	0	0	1	*$_DFFSRE_PNNP_*
posedge	0	1	0	*$_DFFSRE_PNPN_*
posedge	0	1	1	*$_DFFSRE_PNPP_*
posedge	1	0	0	*$_DFFSRE_PPNN_*
posedge	1	0	1	*$_DFFSRE_PPNP_*
posedge	1	1	0	*$_DFFSRE_PPPN_*
posedge	1	1	1	*$_DFFSRE_PPPP_*

Todo

flip-flops with async load, `$_ALDFFE?_[NP]{2,3}_`

`yosys> help $_ALDFFE_NNN_`

A negative edge D-type flip-flop with negative polarity async load and negative polarity clock enable.

```
Truth table:    D C L AD E | Q
               ------------+---
                - - 0 a  - | a
                d \ - -  0 | d
                - - - -  - | q
```

Simulation model (verilog)

Listing 9.122: simcells.v

```
module \$_ALDFFE_NNN_ (D, C, L, AD, E, Q);
    input D, C, L, AD, E;
    output reg Q;
    always @(negedge C or negedge L) begin
        if (L == 0)
            Q <= AD;
        else if (E == 0)
            Q <= D;
    end
endmodule
```

yosys> help $_ALDFFE_NNP_

A negative edge D-type flip-flop with negative polarity async load and positive polarity clock enable.

```
Truth table:    D C L AD E | Q
               ------------+---
                - - 0 a  - | a
                d \ - -  1 | d
                - - - -  - | q
```

Simulation model (verilog)

Listing 9.123: simcells.v

```
module \$_ALDFFE_NNP_ (D, C, L, AD, E, Q);
    input D, C, L, AD, E;
    output reg Q;
    always @(negedge C or negedge L) begin
        if (L == 0)
            Q <= AD;
        else if (E == 1)
            Q <= D;
    end
endmodule
```

yosys> help $_ALDFFE_NPN_

A negative edge D-type flip-flop with positive polarity async load and negative polarity clock enable.

```
Truth table:    D C L AD E | Q
               ------------+---
                - - 1 a  - | a
                d \ - -  0 | d
                - - - -  - | q
```

Simulation model (verilog)

Listing 9.124: simcells.v

```
module \$_ALDFFE_NPN_ (D, C, L, AD, E, Q);
    input D, C, L, AD, E;
    output reg Q;
```

(continues on next page)

(continued from previous page)

```
    always @(negedge C or posedge L) begin
        if (L == 1)
            Q <= AD;
        else if (E == 0)
            Q <= D;
    end
endmodule
```

yosys> help $_ALDFFE_NPP_

A negative edge D-type flip-flop with positive polarity async load and positive polarity clock enable.

```
Truth table:    D C L AD E | Q
               ------------+---
                - - 1 a  - | a
                d \ - -  1 | d
                - - - -  - | q
```

Simulation model (verilog)

Listing 9.125: simcells.v

```
module \$_ALDFFE_NPP_ (D, C, L, AD, E, Q);
    input D, C, L, AD, E;
    output reg Q;
    always @(negedge C or posedge L) begin
        if (L == 1)
            Q <= AD;
        else if (E == 1)
            Q <= D;
    end
endmodule
```

yosys> help $_ALDFFE_PNN_

A positive edge D-type flip-flop with negative polarity async load and negative polarity clock enable.

```
Truth table:    D C L AD E | Q
               ------------+---
                - - 0 a  - | a
                d / - -  0 | d
                - - - -  - | q
```

Simulation model (verilog)

Listing 9.126: simcells.v

```
module \$_ALDFFE_PNN_ (D, C, L, AD, E, Q);
    input D, C, L, AD, E;
    output reg Q;
    always @(posedge C or negedge L) begin
        if (L == 0)
            Q <= AD;
        else if (E == 0)
```

(continues on next page)

(continued from previous page)

```
1527            Q <= D;
1528    end
1529 endmodule
```

yosys> help $_ALDFFE_PNP_

A positive edge D-type flip-flop with negative polarity async load and positive polarity clock enable.

```
Truth table:    D C L AD E | Q
               ------------+---
                - - 0 a  - | a
                d / - -  1 | d
                - - - -  - | q
```

Simulation model (verilog)

Listing 9.127: simcells.v

```
1545 module \$_ALDFFE_PNP_ (D, C, L, AD, E, Q);
1546     input D, C, L, AD, E;
1547     output reg Q;
1548     always @(posedge C or negedge L) begin
1549         if (L == 0)
1550             Q <= AD;
1551         else if (E == 1)
1552             Q <= D;
1553     end
1554 endmodule
```

yosys> help $_ALDFFE_PPN_

A positive edge D-type flip-flop with positive polarity async load and negative polarity clock enable.

```
Truth table:    D C L AD E | Q
               ------------+---
                - - 1 a  - | a
                d / - -  0 | d
                - - - -  - | q
```

Simulation model (verilog)

Listing 9.128: simcells.v

```
1570 module \$_ALDFFE_PPN_ (D, C, L, AD, E, Q);
1571     input D, C, L, AD, E;
1572     output reg Q;
1573     always @(posedge C or posedge L) begin
1574         if (L == 1)
1575             Q <= AD;
1576         else if (E == 0)
1577             Q <= D;
1578     end
1579 endmodule
```

yosys> help $_ALDFFE_PPP_

A positive edge D-type flip-flop with positive polarity async load and positive polarity clock enable.

```
Truth table:    D C L AD E | Q
               ------------+---
                - - 1 a  - | a
                d / - -  1 | d
                - - - -  - | q
```

Simulation model (verilog)

Listing 9.129: simcells.v

```
1595 module \$_ALDFFE_PPP_ (D, C, L, AD, E, Q);
1596     input D, C, L, AD, E;
1597     output reg Q;
1598     always @(posedge C or posedge L) begin
1599         if (L == 1)
1600             Q <= AD;
1601         else if (E == 1)
1602             Q <= D;
1603     end
1604 endmodule
```

yosys> help $_ALDFF_NN_

A negative edge D-type flip-flop with negative polarity async load.

```
Truth table:    D C L AD | Q
               ----------+---
                - - 0 a  | a
                d \ - -  | d
                - - - -  | q
```

Simulation model (verilog)

Listing 9.130: simcells.v

```
1323 module \$_ALDFF_NN_ (D, C, L, AD, Q);
1324     input D, C, L, AD;
1325     output reg Q;
1326     always @(negedge C or negedge L) begin
1327         if (L == 0)
1328             Q <= AD;
1329         else
1330             Q <= D;
1331     end
1332 endmodule
```

yosys> help $_ALDFF_NP_

A negative edge D-type flip-flop with positive polarity async load.

```
Truth table:    D C L AD | Q
               ----------+---
```

(continues on next page)

(continued from previous page)

```
               - - 1 a  | a
               d \ - -  | d
               - - - -  | q
```

Simulation model (verilog)

Listing 9.131: simcells.v

```
module \$_ALDFF_NP_ (D, C, L, AD, Q);
    input D, C, L, AD;
    output reg Q;
    always @(negedge C or posedge L) begin
        if (L == 1)
            Q <= AD;
        else
            Q <= D;
    end
endmodule
```

yosys> help **$_ALDFF_PN_**

A positive edge D-type flip-flop with negative polarity async load.

```
Truth table:    D C L AD | Q
               ----------+---
                - - 0 a  | a
                d / - -  | d
                - - - -  | q
```

Simulation model (verilog)

Listing 9.132: simcells.v

```
module \$_ALDFF_PN_ (D, C, L, AD, Q);
    input D, C, L, AD;
    output reg Q;
    always @(posedge C or negedge L) begin
        if (L == 0)
            Q <= AD;
        else
            Q <= D;
    end
endmodule
```

yosys> help **$_ALDFF_PP_**

A positive edge D-type flip-flop with positive polarity async load.

```
Truth table:    D C L AD | Q
               ----------+---
                - - 1 a  | a
                d / - -  | d
                - - - -  | q
```

Simulation model (verilog)

Listing 9.133: simcells.v

```
1395 module \$_ALDFF_PP_ (D, C, L, AD, Q);
1396     input D, C, L, AD;
1397     output reg Q;
1398     always @(posedge C or posedge L) begin
1399         if (L == 1)
1400             Q <= AD;
1401         else
1402             Q <= D;
1403     end
1404 endmodule
```

yosys> help $_DFFE_NNON_

A negative edge D-type flip-flop with negative polarity reset and negative polarity clock enable.

```
Truth table:    D C R E | Q
                ---------+---
                - - 0 - | 0
                d \ - 0 | d
                - - - - | q
```

Simulation model (verilog)

Listing 9.134: simcells.v

```
924 module \$_DFFE_NNON_ (D, C, R, E, Q);
925     input D, C, R, E;
926     output reg Q;
927     always @(negedge C or negedge R) begin
928         if (R == 0)
929             Q <= 0;
930         else if (E == 0)
931             Q <= D;
932     end
933 endmodule
```

yosys> help $_DFFE_NNOP_

A negative edge D-type flip-flop with negative polarity reset and positive polarity clock enable.

```
Truth table:    D C R E | Q
                ---------+---
                - - 0 - | 0
                d \ - 1 | d
                - - - - | q
```

Simulation model (verilog)

Listing 9.135: simcells.v

```
949 module \$_DFFE_NNOP_ (D, C, R, E, Q);
950     input D, C, R, E;
951     output reg Q;
```

(continues on next page)

(continued from previous page)

```
952     always @(negedge C or negedge R) begin
953         if (R == 0)
954             Q <= 0;
955         else if (E == 1)
956             Q <= D;
957     end
958 endmodule
```

yosys> help $_DFFE_NN1N_

A negative edge D-type flip-flop with negative polarity set and negative polarity clock enable.

```
Truth table:    D C R E | Q
                ---------+---
                - - 0 - | 1
                d \ - 0 | d
                - - - - | q
```

Simulation model (verilog)

Listing 9.136: simcells.v

```
974 module \$_DFFE_NN1N_ (D, C, R, E, Q);
975     input D, C, R, E;
976     output reg Q;
977     always @(negedge C or negedge R) begin
978         if (R == 0)
979             Q <= 1;
980         else if (E == 0)
981             Q <= D;
982     end
983 endmodule
```

yosys> help $_DFFE_NN1P_

A negative edge D-type flip-flop with negative polarity set and positive polarity clock enable.

```
Truth table:    D C R E | Q
                ---------+---
                - - 0 - | 1
                d \ - 1 | d
                - - - - | q
```

Simulation model (verilog)

Listing 9.137: simcells.v

```
999 module \$_DFFE_NN1P_ (D, C, R, E, Q);
1000     input D, C, R, E;
1001     output reg Q;
1002     always @(negedge C or negedge R) begin
1003         if (R == 0)
1004             Q <= 1;
1005         else if (E == 1)
```

(continues on next page)

(continued from previous page)

```
1006            Q <= D;
1007    end
1008 endmodule
```

yosys> help $_DFFE_NN_

A negative edge D-type flip-flop with negative polarity enable.

```
Truth table:    D C E | Q
               -------+---
                d \ 0 | d
                - - - | q
```

Simulation model (verilog)

Listing 9.138: simcells.v

```
650 module \$_DFFE_NN_ (D, C, E, Q);
651     input D, C, E;
652     output reg Q;
653     always @(negedge C) begin
654         if (!E) Q <= D;
655     end
656 endmodule
```

yosys> help $_DFFE_NPON_

A negative edge D-type flip-flop with positive polarity reset and negative polarity clock enable.

```
Truth table:    D C R E | Q
               ---------+---
                - - 1 - | 0
                d \ - 0 | d
                - - - - | q
```

Simulation model (verilog)

Listing 9.139: simcells.v

```
1024 module \$_DFFE_NPON_ (D, C, R, E, Q);
1025     input D, C, R, E;
1026     output reg Q;
1027     always @(negedge C or posedge R) begin
1028         if (R == 1)
1029             Q <= 0;
1030         else if (E == 0)
1031             Q <= D;
1032     end
1033 endmodule
```

yosys> help $_DFFE_NP0P_

A negative edge D-type flip-flop with positive polarity reset and positive polarity clock enable.

```
Truth table:    D C R E | Q
                --------+---
                - - 1 - | 0
                d \ - 1 | d
                - - - - | q
```

Simulation model (verilog)

Listing 9.140: simcells.v

```
module \$_DFFE_NP0P_ (D, C, R, E, Q);
    input D, C, R, E;
    output reg Q;
    always @(negedge C or posedge R) begin
        if (R == 1)
            Q <= 0;
        else if (E == 1)
            Q <= D;
    end
endmodule
```

yosys> help $_DFFE_NP1N_

A negative edge D-type flip-flop with positive polarity set and negative polarity clock enable.

```
Truth table:    D C R E | Q
                --------+---
                - - 1 - | 1
                d \ - 0 | d
                - - - - | q
```

Simulation model (verilog)

Listing 9.141: simcells.v

```
module \$_DFFE_NP1N_ (D, C, R, E, Q);
    input D, C, R, E;
    output reg Q;
    always @(negedge C or posedge R) begin
        if (R == 1)
            Q <= 1;
        else if (E == 0)
            Q <= D;
    end
endmodule
```

yosys> help $_DFFE_NP1P_

A negative edge D-type flip-flop with positive polarity set and positive polarity clock enable.

```
Truth table:    D C R E | Q
                --------+---
                - - 1 - | 1
                d \ - 1 | d
                - - - - | q
```

Simulation model (verilog)

Listing 9.142: simcells.v

```
1099 module \$_DFFE_NP1P_ (D, C, R, E, Q);
1100     input D, C, R, E;
1101     output reg Q;
1102     always @(negedge C or posedge R) begin
1103         if (R == 1)
1104             Q <= 1;
1105         else if (E == 1)
1106             Q <= D;
1107     end
1108 endmodule
```

yosys> help $_DFFE_NP_

A negative edge D-type flip-flop with positive polarity enable.

```
Truth table:    D C E | Q
               -------+---
                d \ 1 | d
                - - - | q
```

Simulation model (verilog)

Listing 9.143: simcells.v

```
670 module \$_DFFE_NP_ (D, C, E, Q);
671     input D, C, E;
672     output reg Q;
673     always @(negedge C) begin
674         if (E) Q <= D;
675     end
676 endmodule
```

yosys> help $_DFFE_PNON_

A positive edge D-type flip-flop with negative polarity reset and negative polarity clock enable.

```
Truth table:    D C R E | Q
               ---------+---
                - - 0 - | 0
                d / - 0 | d
                - - - - | q
```

Simulation model (verilog)

Listing 9.144: simcells.v

```
1124 module \$_DFFE_PNON_ (D, C, R, E, Q);
1125     input D, C, R, E;
1126     output reg Q;
1127     always @(posedge C or negedge R) begin
1128         if (R == 0)
1129             Q <= 0;
```

(continues on next page)

(continued from previous page)

```
        else if (E == 0)
            Q <= D;
    end
endmodule
```

yosys> help $_DFFE_PN0P_

A positive edge D-type flip-flop with negative polarity reset and positive polarity clock enable.

```
Truth table:    D C R E | Q
               ---------+---
                - - 0 - | 0
                d / - 1 | d
                - - - - | q
```

Simulation model (verilog)

Listing 9.145: simcells.v

```
module \$_DFFE_PN0P_ (D, C, R, E, Q);
    input D, C, R, E;
    output reg Q;
    always @(posedge C or negedge R) begin
        if (R == 0)
            Q <= 0;
        else if (E == 1)
            Q <= D;
    end
endmodule
```

yosys> help $_DFFE_PN1N_

A positive edge D-type flip-flop with negative polarity set and negative polarity clock enable.

```
Truth table:    D C R E | Q
               ---------+---
                - - 0 - | 1
                d / - 0 | d
                - - - - | q
```

Simulation model (verilog)

Listing 9.146: simcells.v

```
module \$_DFFE_PN1N_ (D, C, R, E, Q);
    input D, C, R, E;
    output reg Q;
    always @(posedge C or negedge R) begin
        if (R == 0)
            Q <= 1;
        else if (E == 0)
            Q <= D;
    end
endmodule
```

yosys> help $_DFFE_PN1P_

A positive edge D-type flip-flop with negative polarity set and positive polarity clock enable.

```
Truth table:    D C R E | Q
                ---------+---
                - - 0 - | 1
                d / - 1 | d
                - - - - | q
```

Simulation model (verilog)

Listing 9.147: simcells.v

```
1199 module \$_DFFE_PN1P_ (D, C, R, E, Q);
1200     input D, C, R, E;
1201     output reg Q;
1202     always @(posedge C or negedge R) begin
1203         if (R == 0)
1204             Q <= 1;
1205         else if (E == 1)
1206             Q <= D;
1207     end
1208 endmodule
```

yosys> help $_DFFE_PN_

A positive edge D-type flip-flop with negative polarity enable.

```
Truth table:    D C E | Q
                -------+---
                d / 0 | d
                - - - | q
```

Simulation model (verilog)

Listing 9.148: simcells.v

```
690 module \$_DFFE_PN_ (D, C, E, Q);
691     input D, C, E;
692     output reg Q;
693     always @(posedge C) begin
694         if (!E) Q <= D;
695     end
696 endmodule
```

yosys> help $_DFFE_PP0N_

A positive edge D-type flip-flop with positive polarity reset and negative polarity clock enable.

```
Truth table:    D C R E | Q
                ---------+---
                - - 1 - | 0
                d / - 0 | d
                - - - - | q
```

Simulation model (verilog)

Listing 9.149: simcells.v

```
module \$_DFFE_PPON_ (D, C, R, E, Q);
    input D, C, R, E;
    output reg Q;
    always @(posedge C or posedge R) begin
        if (R == 1)
            Q <= 0;
        else if (E == 0)
            Q <= D;
    end
endmodule
```

yosys> help $_DFFE_PP0P_

A positive edge D-type flip-flop with positive polarity reset and positive polarity clock enable.

```
Truth table:    D C R E | Q
               ---------+---
                - - 1 - | 0
                d / - 1 | d
                - - - - | q
```

Simulation model (verilog)

Listing 9.150: simcells.v

```
module \$_DFFE_PP0P_ (D, C, R, E, Q);
    input D, C, R, E;
    output reg Q;
    always @(posedge C or posedge R) begin
        if (R == 1)
            Q <= 0;
        else if (E == 1)
            Q <= D;
    end
endmodule
```

yosys> help $_DFFE_PP1N_

A positive edge D-type flip-flop with positive polarity set and negative polarity clock enable.

```
Truth table:    D C R E | Q
               ---------+---
                - - 1 - | 1
                d / - 0 | d
                - - - - | q
```

Simulation model (verilog)

Listing 9.151: simcells.v

```
module \$_DFFE_PP1N_ (D, C, R, E, Q);
    input D, C, R, E;
    output reg Q;
```

(continues on next page)

(continued from previous page)

```
1277     always @(posedge C or posedge R) begin
1278         if (R == 1)
1279             Q <= 1;
1280         else if (E == 0)
1281             Q <= D;
1282     end
1283 endmodule
```

yosys> help $_DFFE_PP1P_

A positive edge D-type flip-flop with positive polarity set and positive polarity clock enable.

```
Truth table:    D C R E | Q
                ---------+---
                - - 1 - | 1
                d / - 1 | d
                - - - - | q
```

Simulation model (verilog)

Listing 9.152: simcells.v

```
1299 module \$_DFFE_PP1P_ (D, C, R, E, Q);
1300     input D, C, R, E;
1301     output reg Q;
1302     always @(posedge C or posedge R) begin
1303         if (R == 1)
1304             Q <= 1;
1305         else if (E == 1)
1306             Q <= D;
1307     end
1308 endmodule
```

yosys> help $_DFFE_PP_

A positive edge D-type flip-flop with positive polarity enable.

```
Truth table:    D C E | Q
                -------+---
                d / 1 | d
                - - - | q
```

Simulation model (verilog)

Listing 9.153: simcells.v

```
710 module \$_DFFE_PP_ (D, C, E, Q);
711     input D, C, E;
712     output reg Q;
713     always @(posedge C) begin
714         if (E) Q <= D;
715     end
716 endmodule
```

yosys> help $_DFFSRE_NNNN_

A negative edge D-type flip-flop with negative polarity set, negative polarity reset and negative polarity clock enable.

```
Truth table:    C S R E D | Q
               -----------+---
                - - 0 - - | 0
                - 0 - - - | 1
                \ - - 0 d | d
                - - - - - | q
```

Simulation model (verilog)

Listing 9.154: simcells.v

```
module \$_DFFSRE_NNNN_ (C, S, R, E, D, Q);
    input C, S, R, E, D;
    output reg Q;
    always @(negedge C, negedge S, negedge R) begin
        if (R == 0)
            Q <= 0;
        else if (S == 0)
            Q <= 1;
            else if (E == 0)
            Q <= D;
    end
endmodule
```

yosys> help $_DFFSRE_NNNP_

A negative edge D-type flip-flop with negative polarity set, negative polarity reset and positive polarity clock enable.

```
Truth table:    C S R E D | Q
               -----------+---
                - - 0 - - | 0
                - 0 - - - | 1
                \ - - 1 d | d
                - - - - - | q
```

Simulation model (verilog)

Listing 9.155: simcells.v

```
module \$_DFFSRE_NNNP_ (C, S, R, E, D, Q);
    input C, S, R, E, D;
    output reg Q;
    always @(negedge C, negedge S, negedge R) begin
        if (R == 0)
            Q <= 0;
        else if (S == 0)
            Q <= 1;
            else if (E == 1)
            Q <= D;
```

(continues on next page)

(continued from previous page)

```
1883     end
1884 endmodule
```

yosys> help $_DFFSRE_NNPN_

A negative edge D-type flip-flop with negative polarity set, positive polarity reset and negative polarity clock enable.

```
Truth table:    C S R E D | Q
               -----------+---
                - - 1 - - | 0
                - 0 - - - | 1
                \ - - 0 d | d
                - - - - - | q
```

Simulation model (verilog)

Listing 9.156: simcells.v

```
1901 module \$_DFFSRE_NNPN_ (C, S, R, E, D, Q);
1902     input C, S, R, E, D;
1903     output reg Q;
1904     always @(negedge C, negedge S, posedge R) begin
1905         if (R == 1)
1906             Q <= 0;
1907         else if (S == 0)
1908             Q <= 1;
1909             else if (E == 0)
1910             Q <= D;
1911     end
1912 endmodule
```

yosys> help $_DFFSRE_NNPP_

A negative edge D-type flip-flop with negative polarity set, positive polarity reset and positive polarity clock enable.

```
Truth table:    C S R E D | Q
               -----------+---
                - - 1 - - | 0
                - 0 - - - | 1
                \ - - 1 d | d
                - - - - - | q
```

Simulation model (verilog)

Listing 9.157: simcells.v

```
1929 module \$_DFFSRE_NNPP_ (C, S, R, E, D, Q);
1930     input C, S, R, E, D;
1931     output reg Q;
1932     always @(negedge C, negedge S, posedge R) begin
1933         if (R == 1)
1934             Q <= 0;
```

(continues on next page)

(continued from previous page)

```
        else if (S == 0)
            Q <= 1;
            else if (E == 1)
            Q <= D;
    end
endmodule
```

yosys> help $_DFFSRE_NPNN_

A negative edge D-type flip-flop with positive polarity set, negative polarity reset and negative polarity clock enable.

```
Truth table:    C S R E D | Q
               -----------+---
                - - 0 - - | 0
                - 1 - - - | 1
                \ - - 0 d | d
                - - - - - | q
```

Simulation model (verilog)

Listing 9.158: simcells.v

```
module \$_DFFSRE_NPNN_ (C, S, R, E, D, Q);
    input C, S, R, E, D;
    output reg Q;
    always @(negedge C, posedge S, negedge R) begin
        if (R == 0)
            Q <= 0;
        else if (S == 1)
            Q <= 1;
            else if (E == 0)
            Q <= D;
    end
endmodule
```

yosys> help $_DFFSRE_NPNP_

A negative edge D-type flip-flop with positive polarity set, negative polarity reset and positive polarity clock enable.

```
Truth table:    C S R E D | Q
               -----------+---
                - - 0 - - | 0
                - 1 - - - | 1
                \ - - 1 d | d
                - - - - - | q
```

Simulation model (verilog)

Listing 9.159: simcells.v

```
module \$_DFFSRE_NPNP_ (C, S, R, E, D, Q);
    input C, S, R, E, D;
```

(continues on next page)

(continued from previous page)

```
    output reg Q;
    always @(negedge C, posedge S, negedge R) begin
        if (R == 0)
            Q <= 0;
        else if (S == 1)
            Q <= 1;
            else if (E == 1)
            Q <= D;
    end
endmodule
```

yosys> help $_DFFSRE_NPPN_

A negative edge D-type flip-flop with positive polarity set, positive polarity reset and negative polarity clock enable.

```
Truth table:    C S R E D | Q
               -----------+---
                - - 1 - - | 0
                - 1 - - - | 1
                \ - - 0 d | d
                - - - - - | q
```

Simulation model (verilog)

Listing 9.160: simcells.v

```
module \$_DFFSRE_NPPN_ (C, S, R, E, D, Q);
    input C, S, R, E, D;
    output reg Q;
    always @(negedge C, posedge S, posedge R) begin
        if (R == 1)
            Q <= 0;
        else if (S == 1)
            Q <= 1;
            else if (E == 0)
            Q <= D;
    end
endmodule
```

yosys> help $_DFFSRE_NPPP_

A negative edge D-type flip-flop with positive polarity set, positive polarity reset and positive polarity clock enable.

```
Truth table:    C S R E D | Q
               -----------+---
                - - 1 - - | 0
                - 1 - - - | 1
                \ - - 1 d | d
                - - - - - | q
```

Simulation model (verilog)

Listing 9.161: simcells.v

```
module \$_DFFSRE_NPPP_ (C, S, R, E, D, Q);
    input C, S, R, E, D;
    output reg Q;
    always @(negedge C, posedge S, posedge R) begin
        if (R == 1)
            Q <= 0;
        else if (S == 1)
            Q <= 1;
            else if (E == 1)
            Q <= D;
    end
endmodule
```

yosys> help $_DFFSRE_PNNN_

A positive edge D-type flip-flop with negative polarity set, negative polarity reset and negative polarity clock enable.

```
Truth table:    C S R E D | Q
               -----------+---
                - - 0 - - | 0
                - 0 - - - | 1
                / - - 0 d | d
                - - - - - | q
```

Simulation model (verilog)

Listing 9.162: simcells.v

```
module \$_DFFSRE_PNNN_ (C, S, R, E, D, Q);
    input C, S, R, E, D;
    output reg Q;
    always @(posedge C, negedge S, negedge R) begin
        if (R == 0)
            Q <= 0;
        else if (S == 0)
            Q <= 1;
            else if (E == 0)
            Q <= D;
    end
endmodule
```

yosys> help $_DFFSRE_PNNP_

A positive edge D-type flip-flop with negative polarity set, negative polarity reset and positive polarity clock enable.

```
Truth table:    C S R E D | Q
               -----------+---
                - - 0 - - | 0
                - 0 - - - | 1
                / - - 1 d | d
                - - - - - | q
```

Simulation model (verilog)

Listing 9.163: simcells.v

```
2097 module \$_DFFSRE_PNNP_ (C, S, R, E, D, Q);
2098     input C, S, R, E, D;
2099     output reg Q;
2100     always @(posedge C, negedge S, negedge R) begin
2101         if (R == 0)
2102             Q <= 0;
2103         else if (S == 0)
2104             Q <= 1;
2105             else if (E == 1)
2106             Q <= D;
2107     end
2108 endmodule
```

yosys> help $_DFFSRE_PNPN_

A positive edge D-type flip-flop with negative polarity set, positive polarity reset and negative polarity clock enable.

```
Truth table:    C S R E D | Q
               -----------+---
                - - 1 - - | 0
                - 0 - - - | 1
                / - - 0 d | d
                - - - - - | q
```

Simulation model (verilog)

Listing 9.164: simcells.v

```
2125 module \$_DFFSRE_PNPN_ (C, S, R, E, D, Q);
2126     input C, S, R, E, D;
2127     output reg Q;
2128     always @(posedge C, negedge S, posedge R) begin
2129         if (R == 1)
2130             Q <= 0;
2131         else if (S == 0)
2132             Q <= 1;
2133             else if (E == 0)
2134             Q <= D;
2135     end
2136 endmodule
```

yosys> help $_DFFSRE_PNPP_

A positive edge D-type flip-flop with negative polarity set, positive polarity reset and positive polarity clock enable.

```
Truth table:    C S R E D | Q
               -----------+---
                - - 1 - - | 0
                - 0 - - - | 1
```

(continues on next page)

(continued from previous page)

```
               / - - 1 d | d
               - - - - - | q
```

Simulation model (verilog)

Listing 9.165: simcells.v

```
module \$_DFFSRE_PNPP_ (C, S, R, E, D, Q);
    input C, S, R, E, D;
    output reg Q;
    always @(posedge C, negedge S, posedge R) begin
        if (R == 1)
            Q <= 0;
        else if (S == 0)
            Q <= 1;
            else if (E == 1)
            Q <= D;
    end
endmodule
```

yosys> help $_DFFSRE_PPNN_

A positive edge D-type flip-flop with positive polarity set, negative polarity reset and negative polarity clock enable.

```
Truth table:    C S R E D | Q
               -----------+---
                - - 0 - - | 0
                - 1 - - - | 1
                / - - 0 d | d
                - - - - - | q
```

Simulation model (verilog)

Listing 9.166: simcells.v

```
module \$_DFFSRE_PPNN_ (C, S, R, E, D, Q);
    input C, S, R, E, D;
    output reg Q;
    always @(posedge C, posedge S, negedge R) begin
        if (R == 0)
            Q <= 0;
        else if (S == 1)
            Q <= 1;
            else if (E == 0)
            Q <= D;
    end
endmodule
```

yosys> help $_DFFSRE_PPNP_

A positive edge D-type flip-flop with positive polarity set, negative polarity reset and positive polarity clock enable.

```
Truth table:    C S R E D | Q
               -----------+---
                - - 0 - - | 0
                - 1 - - - | 1
                / - - 1 d | d
                - - - - - | q
```

Simulation model (verilog)

Listing 9.167: simcells.v

```
2209 module \$_DFFSRE_PPNP_ (C, S, R, E, D, Q);
2210     input C, S, R, E, D;
2211     output reg Q;
2212     always @(posedge C, posedge S, negedge R) begin
2213         if (R == 0)
2214             Q <= 0;
2215         else if (S == 1)
2216             Q <= 1;
2217             else if (E == 1)
2218             Q <= D;
2219     end
2220 endmodule
```

yosys> help $_DFFSRE_PPPN_

A positive edge D-type flip-flop with positive polarity set, positive polarity reset and negative polarity clock enable.

```
Truth table:    C S R E D | Q
               -----------+---
                - - 1 - - | 0
                - 1 - - - | 1
                / - - 0 d | d
                - - - - - | q
```

Simulation model (verilog)

Listing 9.168: simcells.v

```
2237 module \$_DFFSRE_PPPN_ (C, S, R, E, D, Q);
2238     input C, S, R, E, D;
2239     output reg Q;
2240     always @(posedge C, posedge S, posedge R) begin
2241         if (R == 1)
2242             Q <= 0;
2243         else if (S == 1)
2244             Q <= 1;
2245             else if (E == 0)
2246             Q <= D;
2247     end
2248 endmodule
```

yosys> help $_DFFSRE_PPPP_

A positive edge D-type flip-flop with positive polarity set, positive polarity reset and positive polarity

clock enable.

```
Truth table:    C S R E D | Q
               -----------+---
                - - 1 - - | 0
                - 1 - - - | 1
                / - - 1 d | d
                - - - - - | q
```

Simulation model (verilog)

Listing 9.169: simcells.v

```
2265 module \$_DFFSRE_PPPP_ (C, S, R, E, D, Q);
2266     input C, S, R, E, D;
2267     output reg Q;
2268     always @(posedge C, posedge S, posedge R) begin
2269         if (R == 1)
2270             Q <= 0;
2271         else if (S == 1)
2272             Q <= 1;
2273             else if (E == 1)
2274             Q <= D;
2275     end
2276 endmodule
```

yosys> help $_DFFSR_NNN_

A negative edge D-type flip-flop with negative polarity set and negative polarity reset.

```
Truth table:    C S R D | Q
               ---------+---
                - - 0 - | 0
                - 0 - - | 1
                \ - - d | d
                - - - - | q
```

Simulation model (verilog)

Listing 9.170: simcells.v

```
1621 module \$_DFFSR_NNN_ (C, S, R, D, Q);
1622     input C, S, R, D;
1623     output reg Q;
1624     always @(negedge C, negedge S, negedge R) begin
1625         if (R == 0)
1626             Q <= 0;
1627         else if (S == 0)
1628             Q <= 1;
1629         else
1630             Q <= D;
1631     end
1632 endmodule
```

yosys> help $_DFFSR_NNP_

A negative edge D-type flip-flop with negative polarity set and positive polarity reset.

```
Truth table:    C S R D | Q
                ---------+---
                - - 1 - | 0
                - 0 - - | 1
                \ - - d | d
                - - - - | q
```

Simulation model (verilog)

Listing 9.171: simcells.v

```
1649 module \$_DFFSR_NNP_ (C, S, R, D, Q);
1650     input C, S, R, D;
1651     output reg Q;
1652     always @(negedge C, negedge S, posedge R) begin
1653         if (R == 1)
1654             Q <= 0;
1655         else if (S == 0)
1656             Q <= 1;
1657         else
1658             Q <= D;
1659     end
1660 endmodule
```

yosys> help $_DFFSR_NPN_

A negative edge D-type flip-flop with positive polarity set and negative polarity reset.

```
Truth table:    C S R D | Q
                ---------+---
                - - 0 - | 0
                - 1 - - | 1
                \ - - d | d
                - - - - | q
```

Simulation model (verilog)

Listing 9.172: simcells.v

```
1677 module \$_DFFSR_NPN_ (C, S, R, D, Q);
1678     input C, S, R, D;
1679     output reg Q;
1680     always @(negedge C, posedge S, negedge R) begin
1681         if (R == 0)
1682             Q <= 0;
1683         else if (S == 1)
1684             Q <= 1;
1685         else
1686             Q <= D;
1687     end
1688 endmodule
```

yosys> help $_DFFSR_NPP_

A negative edge D-type flip-flop with positive polarity set and positive polarity reset.

```
Truth table:    C S R D | Q
                --------+---
                - - 1 - | 0
                - 1 - - | 1
                \ - - d | d
                - - - - | q
```

Simulation model (verilog)

Listing 9.173: simcells.v

```
module \$_DFFSR_NPP_ (C, S, R, D, Q);
    input C, S, R, D;
    output reg Q;
    always @(negedge C, posedge S, posedge R) begin
        if (R == 1)
            Q <= 0;
        else if (S == 1)
            Q <= 1;
        else
            Q <= D;
    end
endmodule
```

yosys> help $_DFFSR_PNN_

A positive edge D-type flip-flop with negative polarity set and negative polarity reset.

```
Truth table:    C S R D | Q
                --------+---
                - - 0 - | 0
                - 0 - - | 1
                / - - d | d
                - - - - | q
```

Simulation model (verilog)

Listing 9.174: simcells.v

```
module \$_DFFSR_PNN_ (C, S, R, D, Q);
    input C, S, R, D;
    output reg Q;
    always @(posedge C, negedge S, negedge R) begin
        if (R == 0)
            Q <= 0;
        else if (S == 0)
            Q <= 1;
        else
            Q <= D;
    end
endmodule
```

yosys> help $_DFFSR_PNP_

A positive edge D-type flip-flop with negative polarity set and positive polarity reset.

```
Truth table:    C S R D | Q
                ---------+---
                - - 1 - | 0
                - 0 - - | 1
                / - - d | d
                - - - - | q
```

Simulation model (verilog)

Listing 9.175: simcells.v

```
1761 module \$_DFFSR_PNP_ (C, S, R, D, Q);
1762     input C, S, R, D;
1763     output reg Q;
1764     always @(posedge C, negedge S, posedge R) begin
1765         if (R == 1)
1766             Q <= 0;
1767         else if (S == 0)
1768             Q <= 1;
1769         else
1770             Q <= D;
1771     end
1772 endmodule
```

yosys> help $_DFFSR_PPN_

A positive edge D-type flip-flop with positive polarity set and negative polarity reset.

```
Truth table:    C S R D | Q
                ---------+---
                - - 0 - | 0
                - 1 - - | 1
                / - - d | d
                - - - - | q
```

Simulation model (verilog)

Listing 9.176: simcells.v

```
1789 module \$_DFFSR_PPN_ (C, S, R, D, Q);
1790     input C, S, R, D;
1791     output reg Q;
1792     always @(posedge C, posedge S, negedge R) begin
1793         if (R == 0)
1794             Q <= 0;
1795         else if (S == 1)
1796             Q <= 1;
1797         else
1798             Q <= D;
1799     end
1800 endmodule
```

yosys> help $_DFFSR_PPP_

A positive edge D-type flip-flop with positive polarity set and positive polarity reset.

```
Truth table:    C S R D | Q
                --------+---
                - - 1 - | 0
                - 1 - - | 1
                / - - d | d
                - - - - | q
```

Simulation model (verilog)

Listing 9.177: simcells.v

```
1817 module \$_DFFSR_PPP_ (C, S, R, D, Q);
1818     input C, S, R, D;
1819     output reg Q;
1820     always @(posedge C, posedge S, posedge R) begin
1821         if (R == 1)
1822             Q <= 0;
1823         else if (S == 1)
1824             Q <= 1;
1825         else
1826             Q <= D;
1827     end
1828 endmodule
```

yosys> help $_DFF_NN0_

A negative edge D-type flip-flop with negative polarity reset.

```
Truth table:    D C R | Q
                ------+---
                - - 0 | 0
                d \ - | d
                - - - | q
```

Simulation model (verilog)

Listing 9.178: simcells.v

```
731 module \$_DFF_NN0_ (D, C, R, Q);
732     input D, C, R;
733     output reg Q;
734     always @(negedge C or negedge R) begin
735         if (R == 0)
736             Q <= 0;
737         else
738             Q <= D;
739     end
740 endmodule
```

yosys> help $_DFF_NN1_

A negative edge D-type flip-flop with negative polarity set.

```
Truth table:    D C R | Q
                ------+---
```

(continues on next page)

(continued from previous page)

```
                - - 0 | 1
                d \ - | d
                - - - | q
```

Simulation model (verilog)

Listing 9.179: simcells.v

```
module \$_DFF_NN1_ (D, C, R, Q);
    input D, C, R;
    output reg Q;
    always @(negedge C or negedge R) begin
        if (R == 0)
            Q <= 1;
        else
            Q <= D;
    end
endmodule
```

yosys> help $_DFF_NP0_

A negative edge D-type flip-flop with positive polarity reset.

```
Truth table:    D C R | Q
               -------+---
                - - 1 | 0
                d \ - | d
                - - - | q
```

Simulation model (verilog)

Listing 9.180: simcells.v

```
module \$_DFF_NP0_ (D, C, R, Q);
    input D, C, R;
    output reg Q;
    always @(negedge C or posedge R) begin
        if (R == 1)
            Q <= 0;
        else
            Q <= D;
    end
endmodule
```

yosys> help $_DFF_NP1_

A negative edge D-type flip-flop with positive polarity set.

```
Truth table:    D C R | Q
               -------+---
                - - 1 | 1
                d \ - | d
                - - - | q
```

Simulation model (verilog)

Listing 9.181: simcells.v

```
803 module \$_DFF_NP1_ (D, C, R, Q);
804     input D, C, R;
805     output reg Q;
806     always @(negedge C or posedge R) begin
807         if (R == 1)
808             Q <= 1;
809         else
810             Q <= D;
811     end
812 endmodule
```

yosys> help $_DFF_N_

A negative edge D-type flip-flop.

```
Truth table:    D C | Q
               -----+---
                d \ | d
                - - | q
```

Simulation model (verilog)

Listing 9.182: simcells.v

```
610 module \$_DFF_N_ (D, C, Q);
611     input D, C;
612     output reg Q;
613     always @(negedge C) begin
614         Q <= D;
615     end
616 endmodule
```

yosys> help $_DFF_PN0_

A positive edge D-type flip-flop with negative polarity reset.

```
Truth table:    D C R | Q
               -------+---
                - - 0 | 0
                d / - | d
                - - - | q
```

Simulation model (verilog)

Listing 9.183: simcells.v

```
827 module \$_DFF_PN0_ (D, C, R, Q);
828     input D, C, R;
829     output reg Q;
830     always @(posedge C or negedge R) begin
831         if (R == 0)
832             Q <= 0;
833         else
```

(continues on next page)

(continued from previous page)

```
            Q <= D;
    end
endmodule
```

yosys> help $_DFF_PN1_

A positive edge D-type flip-flop with negative polarity set.

```
Truth table:    D C R | Q
               -------+---
                - - 0 | 1
                d / - | d
                - - - | q
```

Simulation model (verilog)

Listing 9.184: simcells.v

```
module \$_DFF_PN1_ (D, C, R, Q);
    input D, C, R;
    output reg Q;
    always @(posedge C or negedge R) begin
        if (R == 0)
            Q <= 1;
        else
            Q <= D;
    end
endmodule
```

yosys> help $_DFF_PP0_

A positive edge D-type flip-flop with positive polarity reset.

```
Truth table:    D C R | Q
               -------+---
                - - 1 | 0
                d / - | d
                - - - | q
```

Simulation model (verilog)

Listing 9.185: simcells.v

```
module \$_DFF_PP0_ (D, C, R, Q);
    input D, C, R;
    output reg Q;
    always @(posedge C or posedge R) begin
        if (R == 1)
            Q <= 0;
        else
            Q <= D;
    end
endmodule
```

yosys> help $_DFF_PP1_

A positive edge D-type flip-flop with positive polarity set.

```
Truth table:    D C R | Q
               -------+---
                - - 1 | 1
                d / - | d
                - - - | q
```

Simulation model (verilog)

Listing 9.186: simcells.v

```
899 module \$_DFF_PP1_ (D, C, R, Q);
900     input D, C, R;
901     output reg Q;
902     always @(posedge C or posedge R) begin
903         if (R == 1)
904             Q <= 1;
905         else
906             Q <= D;
907     end
908 endmodule
```

yosys> help $_DFF_P_

A positive edge D-type flip-flop.

```
Truth table:    D C | Q
               -----+---
                d / | d
                - - | q
```

Simulation model (verilog)

Listing 9.187: simcells.v

```
630 module \$_DFF_P_ (D, C, Q);
631     input D, C;
632     output reg Q;
633     always @(posedge C) begin
634         Q <= D;
635     end
636 endmodule
```

yosys> help $_FF_

A D-type flip-flop that is clocked from the implicit global clock. (This cell type is usually only used in netlists for formal verification.)

Simulation model (verilog)

Listing 9.188: simcells.v

```
589 module \$_FF_ (D, Q);
590     input D;
```

(continues on next page)

(continued from previous page)

```
591     output reg Q;
592     always @($global_clock) begin
593         Q <= D;
594     end
595 endmodule
```

yosys> help $_SDFFCE_NNON_

A negative edge D-type flip-flop with negative polarity synchronous reset and negative polarity clock enable (with clock enable having priority).

```
Truth table:    D C R E | Q
                ---------+---
                - \ 0 0 | 0
                d \ - 0 | d
                - - - - | q
```

Simulation model (verilog)

Listing 9.189: simcells.v

```
2884 module \$_SDFFCE_NNON_ (D, C, R, E, Q);
2885     input D, C, R, E;
2886     output reg Q;
2887     always @(negedge C) begin
2888         if (E == 0) begin
2889             if (R == 0)
2890                 Q <= 0;
2891             else
2892                 Q <= D;
2893         end
2894     end
2895 endmodule
```

yosys> help $_SDFFCE_NNOP_

A negative edge D-type flip-flop with negative polarity synchronous reset and positive polarity clock enable (with clock enable having priority).

```
Truth table:    D C R E | Q
                ---------+---
                - \ 0 1 | 0
                d \ - 1 | d
                - - - - | q
```

Simulation model (verilog)

Listing 9.190: simcells.v

```
2911 module \$_SDFFCE_NNOP_ (D, C, R, E, Q);
2912     input D, C, R, E;
2913     output reg Q;
2914     always @(negedge C) begin
2915         if (E == 1) begin
```

(continues on next page)

(continued from previous page)

```
            if (R == 0)
                Q <= 0;
            else
                Q <= D;
        end
    end
endmodule
```

yosys> help $_SDFFCE_NN1N_

A negative edge D-type flip-flop with negative polarity synchronous set and negative polarity clock enable (with clock enable having priority).

```
Truth table:    D C R E | Q
               ---------+---
                - \ 0 0 | 1
                d \ - 0 | d
                - - - - | q
```

Simulation model (verilog)

Listing 9.191: simcells.v

```
module \$_SDFFCE_NN1N_ (D, C, R, E, Q);
    input D, C, R, E;
    output reg Q;
    always @(negedge C) begin
        if (E == 0) begin
            if (R == 0)
                Q <= 1;
            else
                Q <= D;
        end
    end
endmodule
```

yosys> help $_SDFFCE_NN1P_

A negative edge D-type flip-flop with negative polarity synchronous set and positive polarity clock enable (with clock enable having priority).

```
Truth table:    D C R E | Q
               ---------+---
                - \ 0 1 | 1
                d \ - 1 | d
                - - - - | q
```

Simulation model (verilog)

Listing 9.192: simcells.v

```
module \$_SDFFCE_NN1P_ (D, C, R, E, Q);
    input D, C, R, E;
    output reg Q;
```

(continues on next page)

(continued from previous page)

```
2968     always @(negedge C) begin
2969         if (E == 1) begin
2970             if (R == 0)
2971                 Q <= 1;
2972             else
2973                 Q <= D;
2974         end
2975     end
2976 endmodule
```

yosys> help $_SDFFCE_NP0N_

A negative edge D-type flip-flop with positive polarity synchronous reset and negative polarity clock enable (with clock enable having priority).

```
Truth table:    D C R E | Q
                ---------+---
                - \ 1 0 | 0
                d \ - 0 | d
                - - - - | q
```

Simulation model (verilog)

Listing 9.193: simcells.v

```
2992 module \$_SDFFCE_NP0N_ (D, C, R, E, Q);
2993     input D, C, R, E;
2994     output reg Q;
2995     always @(negedge C) begin
2996         if (E == 0) begin
2997             if (R == 1)
2998                 Q <= 0;
2999             else
3000                 Q <= D;
3001         end
3002     end
3003 endmodule
```

yosys> help $_SDFFCE_NP0P_

A negative edge D-type flip-flop with positive polarity synchronous reset and positive polarity clock enable (with clock enable having priority).

```
Truth table:    D C R E | Q
                ---------+---
                - \ 1 1 | 0
                d \ - 1 | d
                - - - - | q
```

Simulation model (verilog)

Listing 9.194: simcells.v

```
module \$_SDFFCE_NP0P_ (D, C, R, E, Q);
    input D, C, R, E;
    output reg Q;
    always @(negedge C) begin
        if (E == 1) begin
            if (R == 1)
                Q <= 0;
            else
                Q <= D;
        end
    end
endmodule
```

yosys> help $_SDFFCE_NP1N_

A negative edge D-type flip-flop with positive polarity synchronous set and negative polarity clock enable (with clock enable having priority).

```
Truth table:    D C R E | Q
               ---------+---
                - \ 1 0 | 1
                d \ - 0 | d
                - - - - | q
```

Simulation model (verilog)

Listing 9.195: simcells.v

```
module \$_SDFFCE_NP1N_ (D, C, R, E, Q);
    input D, C, R, E;
    output reg Q;
    always @(negedge C) begin
        if (E == 0) begin
            if (R == 1)
                Q <= 1;
            else
                Q <= D;
        end
    end
endmodule
```

yosys> help $_SDFFCE_NP1P_

A negative edge D-type flip-flop with positive polarity synchronous set and positive polarity clock enable (with clock enable having priority).

```
Truth table:    D C R E | Q
               ---------+---
                - \ 1 1 | 1
                d \ - 1 | d
                - - - - | q
```

Simulation model (verilog)

Listing 9.196: simcells.v

```
3073 module \$_SDFFCE_NP1P_ (D, C, R, E, Q);
3074     input D, C, R, E;
3075     output reg Q;
3076     always @(negedge C) begin
3077         if (E == 1) begin
3078             if (R == 1)
3079                 Q <= 1;
3080             else
3081                 Q <= D;
3082         end
3083     end
3084 endmodule
```

yosys> help $_SDFFCE_PN0N_

A positive edge D-type flip-flop with negative polarity synchronous reset and negative polarity clock enable (with clock enable having priority).

```
Truth table:    D C R E | Q
               ---------+---
                - / 0 0 | 0
                d / - 0 | d
                - - - - | q
```

Simulation model (verilog)

Listing 9.197: simcells.v

```
3100 module \$_SDFFCE_PN0N_ (D, C, R, E, Q);
3101     input D, C, R, E;
3102     output reg Q;
3103     always @(posedge C) begin
3104         if (E == 0) begin
3105             if (R == 0)
3106                 Q <= 0;
3107             else
3108                 Q <= D;
3109         end
3110     end
3111 endmodule
```

yosys> help $_SDFFCE_PN0P_

A positive edge D-type flip-flop with negative polarity synchronous reset and positive polarity clock enable (with clock enable having priority).

```
Truth table:    D C R E | Q
               ---------+---
                - / 0 1 | 0
                d / - 1 | d
                - - - - | q
```

Simulation model (verilog)

Listing 9.198: simcells.v

```
3127 module \$_SDFFCE_PN0P_ (D, C, R, E, Q);
3128     input D, C, R, E;
3129     output reg Q;
3130     always @(posedge C) begin
3131         if (E == 1) begin
3132             if (R == 0)
3133                 Q <= 0;
3134             else
3135                 Q <= D;
3136         end
3137     end
3138 endmodule
```

yosys> help $_SDFFCE_PN1N_

A positive edge D-type flip-flop with negative polarity synchronous set and negative polarity clock enable (with clock enable having priority).

```
Truth table:    D C R E | Q
               ---------+---
                - / 0 0 | 1
                d / - 0 | d
                - - - - | q
```

Simulation model (verilog)

Listing 9.199: simcells.v

```
3154 module \$_SDFFCE_PN1N_ (D, C, R, E, Q);
3155     input D, C, R, E;
3156     output reg Q;
3157     always @(posedge C) begin
3158         if (E == 0) begin
3159             if (R == 0)
3160                 Q <= 1;
3161             else
3162                 Q <= D;
3163         end
3164     end
3165 endmodule
```

yosys> help $_SDFFCE_PN1P_

A positive edge D-type flip-flop with negative polarity synchronous set and positive polarity clock enable (with clock enable having priority).

```
Truth table:    D C R E | Q
               ---------+---
                - / 0 1 | 1
                d / - 1 | d
                - - - - | q
```

Simulation model (verilog)

Listing 9.200: simcells.v

```
3181 module \$_SDFFCE_PN1P_ (D, C, R, E, Q);
3182     input D, C, R, E;
3183     output reg Q;
3184     always @(posedge C) begin
3185         if (E == 1) begin
3186             if (R == 0)
3187                 Q <= 1;
3188             else
3189                 Q <= D;
3190         end
3191     end
3192 endmodule
```

yosys> help $_SDFFCE_PP0N_

A positive edge D-type flip-flop with positive polarity synchronous reset and negative polarity clock enable (with clock enable having priority).

```
Truth table:    D C R E | Q
               ---------+---
                - / 1 0 | 0
                d / - 0 | d
                - - - - | q
```

Simulation model (verilog)

Listing 9.201: simcells.v

```
3208 module \$_SDFFCE_PP0N_ (D, C, R, E, Q);
3209     input D, C, R, E;
3210     output reg Q;
3211     always @(posedge C) begin
3212         if (E == 0) begin
3213             if (R == 1)
3214                 Q <= 0;
3215             else
3216                 Q <= D;
3217         end
3218     end
3219 endmodule
```

yosys> help $_SDFFCE_PP0P_

A positive edge D-type flip-flop with positive polarity synchronous reset and positive polarity clock enable (with clock enable having priority).

```
Truth table:    D C R E | Q
               ---------+---
                - / 1 1 | 0
                d / - 1 | d
                - - - - | q
```

Simulation model (verilog)

Listing 9.202: simcells.v

```
3235 module \$_SDFFCE_PP0P_ (D, C, R, E, Q);
3236     input D, C, R, E;
3237     output reg Q;
3238     always @(posedge C) begin
3239         if (E == 1) begin
3240             if (R == 1)
3241                 Q <= 0;
3242             else
3243                 Q <= D;
3244         end
3245     end
3246 endmodule
```

yosys> help $_SDFFCE_PP1N_

A positive edge D-type flip-flop with positive polarity synchronous set and negative polarity clock enable (with clock enable having priority).

```
Truth table:    D C R E | Q
               ---------+---
                - / 1 0 | 1
                d / - 0 | d
                - - - - | q
```

Simulation model (verilog)

Listing 9.203: simcells.v

```
3262 module \$_SDFFCE_PP1N_ (D, C, R, E, Q);
3263     input D, C, R, E;
3264     output reg Q;
3265     always @(posedge C) begin
3266         if (E == 0) begin
3267             if (R == 1)
3268                 Q <= 1;
3269             else
3270                 Q <= D;
3271         end
3272     end
3273 endmodule
```

yosys> help $_SDFFCE_PP1P_

A positive edge D-type flip-flop with positive polarity synchronous set and positive polarity clock enable (with clock enable having priority).

```
Truth table:    D C R E | Q
               ---------+---
                - / 1 1 | 1
                d / - 1 | d
                - - - - | q
```

Simulation model (verilog)

Listing 9.204: simcells.v

```
3289 module \$_SDFFCE_PP1P_ (D, C, R, E, Q);
3290     input D, C, R, E;
3291     output reg Q;
3292     always @(posedge C) begin
3293         if (E == 1) begin
3294             if (R == 1)
3295                 Q <= 1;
3296             else
3297                 Q <= D;
3298         end
3299     end
3300 endmodule
```

yosys> help $_SDFFE_NNON_

A negative edge D-type flip-flop with negative polarity synchronous reset and negative polarity clock enable (with reset having priority).

```
Truth table:    D C R E | Q
               ---------+---
                - \ 0 - | 0
                d \ - 0 | d
                - - - - | q
```

Simulation model (verilog)

Listing 9.205: simcells.v

```
2484 module \$_SDFFE_NNON_ (D, C, R, E, Q);
2485     input D, C, R, E;
2486     output reg Q;
2487     always @(negedge C) begin
2488         if (R == 0)
2489             Q <= 0;
2490         else if (E == 0)
2491             Q <= D;
2492     end
2493 endmodule
```

yosys> help $_SDFFE_NNOP_

A negative edge D-type flip-flop with negative polarity synchronous reset and positive polarity clock enable (with reset having priority).

```
Truth table:    D C R E | Q
               ---------+---
                - \ 0 - | 0
                d \ - 1 | d
                - - - - | q
```

Simulation model (verilog)

Listing 9.206: simcells.v

```
module \$_SDFFE_NNOP_ (D, C, R, E, Q);
    input D, C, R, E;
    output reg Q;
    always @(negedge C) begin
        if (R == 0)
            Q <= 0;
        else if (E == 1)
            Q <= D;
    end
endmodule
```

yosys> help $_SDFFE_NN1N_

A negative edge D-type flip-flop with negative polarity synchronous set and negative polarity clock enable (with set having priority).

```
Truth table:    D C R E | Q
                ---------+---
                - \ 0 - | 1
                d \ - 0 | d
                - - - - | q
```

Simulation model (verilog)

Listing 9.207: simcells.v

```
module \$_SDFFE_NN1N_ (D, C, R, E, Q);
    input D, C, R, E;
    output reg Q;
    always @(negedge C) begin
        if (R == 0)
            Q <= 1;
        else if (E == 0)
            Q <= D;
    end
endmodule
```

yosys> help $_SDFFE_NN1P_

A negative edge D-type flip-flop with negative polarity synchronous set and positive polarity clock enable (with set having priority).

```
Truth table:    D C R E | Q
                ---------+---
                - \ 0 - | 1
                d \ - 1 | d
                - - - - | q
```

Simulation model (verilog)

Listing 9.208: simcells.v

```
module \$_SDFFE_NN1P_ (D, C, R, E, Q);
    input D, C, R, E;
    output reg Q;
    always @(negedge C) begin
        if (R == 0)
            Q <= 1;
        else if (E == 1)
            Q <= D;
    end
endmodule
```

yosys> help $_SDFFE_NP0N_

A negative edge D-type flip-flop with positive polarity synchronous reset and negative polarity clock enable (with reset having priority).

```
Truth table:    D C R E | Q
                ---------+---
                - \ 1 - | 0
                d \ - 0 | d
                - - - - | q
```

Simulation model (verilog)

Listing 9.209: simcells.v

```
module \$_SDFFE_NP0N_ (D, C, R, E, Q);
    input D, C, R, E;
    output reg Q;
    always @(negedge C) begin
        if (R == 1)
            Q <= 0;
        else if (E == 0)
            Q <= D;
    end
endmodule
```

yosys> help $_SDFFE_NP0P_

A negative edge D-type flip-flop with positive polarity synchronous reset and positive polarity clock enable (with reset having priority).

```
Truth table:    D C R E | Q
                ---------+---
                - \ 1 - | 0
                d \ - 1 | d
                - - - - | q
```

Simulation model (verilog)

Listing 9.210: simcells.v

```
2609 module \$_SDFFE_NP0P_ (D, C, R, E, Q);
2610     input D, C, R, E;
2611     output reg Q;
2612     always @(negedge C) begin
2613         if (R == 1)
2614             Q <= 0;
2615         else if (E == 1)
2616             Q <= D;
2617     end
2618 endmodule
```

yosys> help $_SDFFE_NP1N_

A negative edge D-type flip-flop with positive polarity synchronous set and negative polarity clock enable (with set having priority).

```
Truth table:    D C R E | Q
                ---------+---
                - \ 1 - | 1
                d \ - 0 | d
                - - - - | q
```

Simulation model (verilog)

Listing 9.211: simcells.v

```
2634 module \$_SDFFE_NP1N_ (D, C, R, E, Q);
2635     input D, C, R, E;
2636     output reg Q;
2637     always @(negedge C) begin
2638         if (R == 1)
2639             Q <= 1;
2640         else if (E == 0)
2641             Q <= D;
2642     end
2643 endmodule
```

yosys> help $_SDFFE_NP1P_

A negative edge D-type flip-flop with positive polarity synchronous set and positive polarity clock enable (with set having priority).

```
Truth table:    D C R E | Q
                ---------+---
                - \ 1 - | 1
                d \ - 1 | d
                - - - - | q
```

Simulation model (verilog)

Listing 9.212: simcells.v

```
module \$_SDFFE_NP1P_ (D, C, R, E, Q);
    input D, C, R, E;
    output reg Q;
    always @(negedge C) begin
        if (R == 1)
            Q <= 1;
        else if (E == 1)
            Q <= D;
    end
endmodule
```

yosys> help $_SDFFE_PN0N_

A positive edge D-type flip-flop with negative polarity synchronous reset and negative polarity clock enable (with reset having priority).

```
Truth table:    D C R E | Q
                ---------+---
                - / 0 - | 0
                d / - 0 | d
                - - - - | q
```

Simulation model (verilog)

Listing 9.213: simcells.v

```
module \$_SDFFE_PN0N_ (D, C, R, E, Q);
    input D, C, R, E;
    output reg Q;
    always @(posedge C) begin
        if (R == 0)
            Q <= 0;
        else if (E == 0)
            Q <= D;
    end
endmodule
```

yosys> help $_SDFFE_PN0P_

A positive edge D-type flip-flop with negative polarity synchronous reset and positive polarity clock enable (with reset having priority).

```
Truth table:    D C R E | Q
                ---------+---
                - / 0 - | 0
                d / - 1 | d
                - - - - | q
```

Simulation model (verilog)

Listing 9.214: simcells.v

```
module \$_SDFFE_PN0P_ (D, C, R, E, Q);
    input D, C, R, E;
    output reg Q;
    always @(posedge C) begin
        if (R == 0)
            Q <= 0;
        else if (E == 1)
            Q <= D;
    end
endmodule
```

yosys> help $_SDFFE_PN1N_

A positive edge D-type flip-flop with negative polarity synchronous set and negative polarity clock enable (with set having priority).

```
Truth table:    D C R E | Q
               ---------+---
                - / 0 - | 1
                d / - 0 | d
                - - - - | q
```

Simulation model (verilog)

Listing 9.215: simcells.v

```
module \$_SDFFE_PN1N_ (D, C, R, E, Q);
    input D, C, R, E;
    output reg Q;
    always @(posedge C) begin
        if (R == 0)
            Q <= 1;
        else if (E == 0)
            Q <= D;
    end
endmodule
```

yosys> help $_SDFFE_PN1P_

A positive edge D-type flip-flop with negative polarity synchronous set and positive polarity clock enable (with set having priority).

```
Truth table:    D C R E | Q
               ---------+---
                - / 0 - | 1
                d / - 1 | d
                - - - - | q
```

Simulation model (verilog)

Listing 9.216: simcells.v

```
module \$_SDFFE_PN1P_ (D, C, R, E, Q);
    input D, C, R, E;
    output reg Q;
    always @(posedge C) begin
        if (R == 0)
            Q <= 1;
        else if (E == 1)
            Q <= D;
    end
endmodule
```

yosys> help $_SDFFE_PP0N_

A positive edge D-type flip-flop with positive polarity synchronous reset and negative polarity clock enable (with reset having priority).

```
Truth table:    D C R E | Q
                ---------+---
                - / 1 - | 0
                d / - 0 | d
                - - - - | q
```

Simulation model (verilog)

Listing 9.217: simcells.v

```
module \$_SDFFE_PP0N_ (D, C, R, E, Q);
    input D, C, R, E;
    output reg Q;
    always @(posedge C) begin
        if (R == 1)
            Q <= 0;
        else if (E == 0)
            Q <= D;
    end
endmodule
```

yosys> help $_SDFFE_PP0P_

A positive edge D-type flip-flop with positive polarity synchronous reset and positive polarity clock enable (with reset having priority).

```
Truth table:    D C R E | Q
                ---------+---
                - / 1 - | 0
                d / - 1 | d
                - - - - | q
```

Simulation model (verilog)

Listing 9.218: simcells.v

```
2809 module \$_SDFFE_PP0P_ (D, C, R, E, Q);
2810     input D, C, R, E;
2811     output reg Q;
2812     always @(posedge C) begin
2813         if (R == 1)
2814             Q <= 0;
2815         else if (E == 1)
2816             Q <= D;
2817     end
2818 endmodule
```

yosys> help $_SDFFE_PP1N_

A positive edge D-type flip-flop with positive polarity synchronous set and negative polarity clock enable (with set having priority).

```
Truth table:    D C R E | Q
                ---------+---
                - / 1 - | 1
                d / - 0 | d
                - - - - | q
```

Simulation model (verilog)

Listing 9.219: simcells.v

```
2834 module \$_SDFFE_PP1N_ (D, C, R, E, Q);
2835     input D, C, R, E;
2836     output reg Q;
2837     always @(posedge C) begin
2838         if (R == 1)
2839             Q <= 1;
2840         else if (E == 0)
2841             Q <= D;
2842     end
2843 endmodule
```

yosys> help $_SDFFE_PP1P_

A positive edge D-type flip-flop with positive polarity synchronous set and positive polarity clock enable (with set having priority).

```
Truth table:    D C R E | Q
                ---------+---
                - / 1 - | 1
                d / - 1 | d
                - - - - | q
```

Simulation model (verilog)

Listing 9.220: simcells.v

```
module \$_SDFFE_PP1P_ (D, C, R, E, Q);
    input D, C, R, E;
    output reg Q;
    always @(posedge C) begin
        if (R == 1)
            Q <= 1;
        else if (E == 1)
            Q <= D;
    end
endmodule
```

yosys> help $_SDFF_NN0_

A negative edge D-type flip-flop with negative polarity synchronous reset.

```
Truth table:    D C R | Q
               -------+---
                - \ 0 | 0
                d \ - | d
                - - - | q
```

Simulation model (verilog)

Listing 9.221: simcells.v

```
module \$_SDFF_NN0_ (D, C, R, Q);
    input D, C, R;
    output reg Q;
    always @(negedge C) begin
        if (R == 0)
            Q <= 0;
        else
            Q <= D;
    end
endmodule
```

yosys> help $_SDFF_NN1_

A negative edge D-type flip-flop with negative polarity synchronous set.

```
Truth table:    D C R | Q
               -------+---
                - \ 0 | 1
                d \ - | d
                - - - | q
```

Simulation model (verilog)

Listing 9.222: simcells.v

```
module \$_SDFF_NN1_ (D, C, R, Q);
    input D, C, R;
    output reg Q;
```

(continues on next page)

(continued from previous page)

```
    always @(negedge C) begin
        if (R == 0)
            Q <= 1;
        else
            Q <= D;
    end
endmodule
```

yosys> help $_SDFF_NP0_

A negative edge D-type flip-flop with positive polarity synchronous reset.

```
Truth table:    D C R | Q
               -------+---
                - \ 1 | 0
                d \ - | d
                - - - | q
```

Simulation model (verilog)

Listing 9.223: simcells.v

```
module \$_SDFF_NP0_ (D, C, R, Q);
    input D, C, R;
    output reg Q;
    always @(negedge C) begin
        if (R == 1)
            Q <= 0;
        else
            Q <= D;
    end
endmodule
```

yosys> help $_SDFF_NP1_

A negative edge D-type flip-flop with positive polarity synchronous set.

```
Truth table:    D C R | Q
               -------+---
                - \ 1 | 1
                d \ - | d
                - - - | q
```

Simulation model (verilog)

Listing 9.224: simcells.v

```
module \$_SDFF_NP1_ (D, C, R, Q);
    input D, C, R;
    output reg Q;
    always @(negedge C) begin
        if (R == 1)
            Q <= 1;
        else
```

(continues on next page)

(continued from previous page)

```
            Q <= D;
    end
endmodule
```

yosys> help $_SDFF_PN0_

A positive edge D-type flip-flop with negative polarity synchronous reset.

```
Truth table:    D C R | Q
               -------+---
                - / 0 | 0
                d / - | d
                - - - | q
```

Simulation model (verilog)

Listing 9.225: simcells.v

```
module \$_SDFF_PN0_ (D, C, R, Q);
    input D, C, R;
    output reg Q;
    always @(posedge C) begin
        if (R == 0)
            Q <= 0;
        else
            Q <= D;
    end
endmodule
```

yosys> help $_SDFF_PN1_

A positive edge D-type flip-flop with negative polarity synchronous set.

```
Truth table:    D C R | Q
               -------+---
                - / 0 | 1
                d / - | d
                - - - | q
```

Simulation model (verilog)

Listing 9.226: simcells.v

```
module \$_SDFF_PN1_ (D, C, R, Q);
    input D, C, R;
    output reg Q;
    always @(posedge C) begin
        if (R == 0)
            Q <= 1;
        else
            Q <= D;
    end
endmodule
```

```
yosys> help $_SDFF_PP0_
```

A positive edge D-type flip-flop with positive polarity synchronous reset.

```
Truth table:    D C R | Q
               -------+---
                - / 1 | 0
                d / - | d
                - - - | q
```

Simulation model (verilog)

Listing 9.227: simcells.v

```
module \$_SDFF_PP0_ (D, C, R, Q);
    input D, C, R;
    output reg Q;
    always @(posedge C) begin
        if (R == 1)
            Q <= 0;
        else
            Q <= D;
    end
endmodule
```

```
yosys> help $_SDFF_PP1_
```

A positive edge D-type flip-flop with positive polarity synchronous set.

```
Truth table:    D C R | Q
               -------+---
                - / 1 | 1
                d / - | d
                - - - | q
```

Simulation model (verilog)

Listing 9.228: simcells.v

```
module \$_SDFF_PP1_ (D, C, R, Q);
    input D, C, R;
    output reg Q;
    always @(posedge C) begin
        if (R == 1)
            Q <= 1;
        else
            Q <= D;
    end
endmodule
```

9.2.4 Latch cells

The cell types *$_DLATCH_N_* and *$_DLATCH_P_* represent d-type latches.

Table 9.12: Cell types for basic latches

Verilog	Cell Type
`always @* if (!E) Q <= D`	*$_DLATCH_N_*
`always @* if (E) Q <= D`	*$_DLATCH_P_*

The cell types `$_DLATCH_[NP][NP][01]_` implement d-type latches with reset. The values in the table for these cell types relate to the following Verilog code template:

```
always @*
   if (R == RST_LVL)
      Q <= RST_VAL;
   else if (E == EN_LVL)
      Q <= D;
```

Table 9.13: Cell types for gate level logic networks (latches with reset)

EnLvl	*RstLvl*	*RstVal*	Cell Type
0	0	0	*$_DLATCH_NN0_*
0	0	1	*$_DLATCH_NN1_*
0	1	0	*$_DLATCH_NP0_*
0	1	1	*$_DLATCH_NP1_*
1	0	0	*$_DLATCH_PN0_*
1	0	1	*$_DLATCH_PN1_*
1	1	0	*$_DLATCH_PP0_*
1	1	1	*$_DLATCH_PP1_*

The cell types `$_DLATCHSR_[NP][NP][NP]_` implement d-type latches with set and reset. The values in the table for these cell types relate to the following Verilog code template:

```
always @*
   if (R == RST_LVL)
      Q <= 0;
   else if (S == SET_LVL)
      Q <= 1;
   else if (E == EN_LVL)
      Q <= D;
```

Table 9.14: Cell types for gate level logic networks (latches with set and reset)

EnLvl	*SetLvl*	*RstLvl*	Cell Type
0	0	0	*$_DLATCHSR_NNN_*
0	0	1	*$_DLATCHSR_NNP_*
0	1	0	*$_DLATCHSR_NPN_*
0	1	1	*$_DLATCHSR_NPP_*
1	0	0	*$_DLATCHSR_PNN_*
1	0	1	*$_DLATCHSR_PNP_*
1	1	0	*$_DLATCHSR_PPN_*
1	1	1	*$_DLATCHSR_PPP_*

The cell types `$_SR_[NP][NP]_` implement sr-type latches. The values in the table for these cell types relate to the following Verilog code template:

```
always @*
   if (R == RST_LVL)
      Q <= 0;
   else if (S == SET_LVL)
      Q <= 1;
```

Table 9.15: Cell types for gate level logic networks (SR latches)

SetLvl	*RstLvl*	Cell Type
0	0	*$_SR_NN_*
0	1	*$_SR_NP_*
1	0	*$_SR_PN_*
1	1	*$_SR_PP_*

yosys> help $_DLATCHSR_NNN_

A negative enable D-type latch with negative polarity set and negative polarity reset.

```
Truth table:    E S R D | Q
               ---------+---
                - - 0 - | 0
                - 0 - - | 1
                0 - - d | d
                - - - - | q
```

Simulation model (verilog)

Listing 9.229: simcells.v

```
3551 module \$_DLATCHSR_NNN_ (E, S, R, D, Q);
3552     input E, S, R, D;
3553     output reg Q;
3554     always @* begin
3555         if (R == 0)
3556             Q <= 0;
3557         else if (S == 0)
3558             Q <= 1;
3559         else if (E == 0)
3560             Q <= D;
3561     end
3562 endmodule
```

yosys> help $_DLATCHSR_NNP_

A negative enable D-type latch with negative polarity set and positive polarity reset.

```
Truth table:    E S R D | Q
               ---------+---
                - - 1 - | 0
                - 0 - - | 1
```

(continues on next page)

(continued from previous page)

```
                0 - - d | d
                - - - - | q
```

Simulation model (verilog)

Listing 9.230: simcells.v

```
3579 module \$_DLATCHSR_NNP_ (E, S, R, D, Q);
3580     input E, S, R, D;
3581     output reg Q;
3582     always @* begin
3583         if (R == 1)
3584             Q <= 0;
3585         else if (S == 0)
3586             Q <= 1;
3587         else if (E == 0)
3588             Q <= D;
3589     end
3590 endmodule
```

yosys> help $_DLATCHSR_NPN_

A negative enable D-type latch with positive polarity set and negative polarity reset.

```
Truth table:    E S R D | Q
               ---------+---
                - - 0 - | 0
                - 1 - - | 1
                0 - - d | d
                - - - - | q
```

Simulation model (verilog)

Listing 9.231: simcells.v

```
3607 module \$_DLATCHSR_NPN_ (E, S, R, D, Q);
3608     input E, S, R, D;
3609     output reg Q;
3610     always @* begin
3611         if (R == 0)
3612             Q <= 0;
3613         else if (S == 1)
3614             Q <= 1;
3615         else if (E == 0)
3616             Q <= D;
3617     end
3618 endmodule
```

yosys> help $_DLATCHSR_NPP_

A negative enable D-type latch with positive polarity set and positive polarity reset.

```
Truth table:    E S R D | Q
               ---------+---
```

(continues on next page)

(continued from previous page)

```
                - - 1 - | 0
                - 1 - - | 1
                0 - - d | d
                - - - - | q
```

Simulation model (verilog)

Listing 9.232: simcells.v

```
3635 module \$_DLATCHSR_NPP_ (E, S, R, D, Q);
3636     input E, S, R, D;
3637     output reg Q;
3638     always @* begin
3639         if (R == 1)
3640             Q <= 0;
3641         else if (S == 1)
3642             Q <= 1;
3643         else if (E == 0)
3644             Q <= D;
3645     end
3646 endmodule
```

yosys> help $_DLATCHSR_PNN_

A positive enable D-type latch with negative polarity set and negative polarity reset.

```
Truth table:    E S R D | Q
               ---------+---
                - - 0 - | 0
                - 0 - - | 1
                1 - - d | d
                - - - - | q
```

Simulation model (verilog)

Listing 9.233: simcells.v

```
3663 module \$_DLATCHSR_PNN_ (E, S, R, D, Q);
3664     input E, S, R, D;
3665     output reg Q;
3666     always @* begin
3667         if (R == 0)
3668             Q <= 0;
3669         else if (S == 0)
3670             Q <= 1;
3671         else if (E == 1)
3672             Q <= D;
3673     end
3674 endmodule
```

yosys> help $_DLATCHSR_PNP_

A positive enable D-type latch with negative polarity set and positive polarity reset.

```
Truth table:    E S R D | Q
               ---------+---
                - - 1 - | 0
                - 0 - - | 1
                1 - - d | d
                - - - - | q
```

Simulation model (verilog)

Listing 9.234: simcells.v

```
3691 module \$_DLATCHSR_PNP_ (E, S, R, D, Q);
3692     input E, S, R, D;
3693     output reg Q;
3694     always @* begin
3695         if (R == 1)
3696             Q <= 0;
3697         else if (S == 0)
3698             Q <= 1;
3699         else if (E == 1)
3700             Q <= D;
3701     end
3702 endmodule
```

yosys> help $_DLATCHSR_PPN_

A positive enable D-type latch with positive polarity set and negative polarity reset.

```
Truth table:    E S R D | Q
               ---------+---
                - - 0 - | 0
                - 1 - - | 1
                1 - - d | d
                - - - - | q
```

Simulation model (verilog)

Listing 9.235: simcells.v

```
3719 module \$_DLATCHSR_PPN_ (E, S, R, D, Q);
3720     input E, S, R, D;
3721     output reg Q;
3722     always @* begin
3723         if (R == 0)
3724             Q <= 0;
3725         else if (S == 1)
3726             Q <= 1;
3727         else if (E == 1)
3728             Q <= D;
3729     end
3730 endmodule
```

yosys> help $_DLATCHSR_PPP_

A positive enable D-type latch with positive polarity set and positive polarity reset.

```
Truth table:    E S R D | Q
                --------+---
                - - 1 - | 0
                - 1 - - | 1
                1 - - d | d
                - - - - | q
```

Simulation model (verilog)

Listing 9.236: simcells.v

```
3747 module \$_DLATCHSR_PPP_ (E, S, R, D, Q);
3748     input E, S, R, D;
3749     output reg Q;
3750     always @* begin
3751         if (R == 1)
3752             Q <= 0;
3753         else if (S == 1)
3754             Q <= 1;
3755         else if (E == 1)
3756             Q <= D;
3757     end
3758 endmodule
```

yosys> help $_DLATCH_NNO_

A negative enable D-type latch with negative polarity reset.

```
Truth table:    E R D | Q
                ------+---
                - 0 - | 0
                0 - d | d
                - - - | q
```

Simulation model (verilog)

Listing 9.237: simcells.v

```
3357 module \$_DLATCH_NNO_ (E, R, D, Q);
3358     input E, R, D;
3359     output reg Q;
3360     always @* begin
3361         if (R == 0)
3362                     Q <= 0;
3363         else if (E == 0)
3364             Q <= D;
3365     end
3366 endmodule
```

yosys> help $_DLATCH_NN1_

A negative enable D-type latch with negative polarity set.

```
Truth table:    E R D | Q
                ------+---
```

(continues on next page)

(continued from previous page)

```
                - 0 - | 1
                0 - d | d
                - - - | q
```

Simulation model (verilog)

Listing 9.238: simcells.v

```
3381 module \$_DLATCH_NN1_ (E, R, D, Q);
3382     input E, R, D;
3383     output reg Q;
3384     always @* begin
3385         if (R == 0)
3386                     Q <= 1;
3387         else if (E == 0)
3388             Q <= D;
3389     end
3390 endmodule
```

yosys> help $_DLATCH_NP0_

A negative enable D-type latch with positive polarity reset.

```
Truth table:    E R D | Q
                ------+---
                - 1 - | 0
                0 - d | d
                - - - | q
```

Simulation model (verilog)

Listing 9.239: simcells.v

```
3405 module \$_DLATCH_NP0_ (E, R, D, Q);
3406     input E, R, D;
3407     output reg Q;
3408     always @* begin
3409         if (R == 1)
3410                     Q <= 0;
3411         else if (E == 0)
3412             Q <= D;
3413     end
3414 endmodule
```

yosys> help $_DLATCH_NP1_

A negative enable D-type latch with positive polarity set.

```
Truth table:    E R D | Q
                ------+---
                - 1 - | 1
                0 - d | d
                - - - | q
```

Simulation model (verilog)

Listing 9.240: simcells.v

```
3429 module \$_DLATCH_NP1_ (E, R, D, Q);
3430     input E, R, D;
3431     output reg Q;
3432     always @* begin
3433         if (R == 1)
3434                     Q <= 1;
3435         else if (E == 0)
3436             Q <= D;
3437     end
3438 endmodule
```

yosys> help $_DLATCH_N_

A negative enable D-type latch.

```
Truth table:    E D | Q
               -----+---
                0 d | d
                - - | q
```

Simulation model (verilog)

Listing 9.241: simcells.v

```
3314 module \$_DLATCH_N_ (E, D, Q);
3315     input E, D;
3316     output reg Q;
3317     always @* begin
3318         if (E == 0)
3319             Q <= D;
3320     end
3321 endmodule
```

yosys> help $_DLATCH_PN0_

A positive enable D-type latch with negative polarity reset.

```
Truth table:    E R D | Q
               -------+---
                - 0 - | 0
                1 - d | d
                - - - | q
```

Simulation model (verilog)

Listing 9.242: simcells.v

```
3453 module \$_DLATCH_PN0_ (E, R, D, Q);
3454     input E, R, D;
3455     output reg Q;
3456     always @* begin
3457         if (R == 0)
3458                     Q <= 0;
```

(continues on next page)

(continued from previous page)

```
3459        else if (E == 1)
3460            Q <= D;
3461    end
3462 endmodule
```

yosys> help $_DLATCH_PN1_

A positive enable D-type latch with negative polarity set.

```
Truth table:    E R D | Q
               -------+---
                - 0 - | 1
                1 - d | d
                - - - | q
```

Simulation model (verilog)

Listing 9.243: simcells.v

```
3477 module \$_DLATCH_PN1_ (E, R, D, Q);
3478     input E, R, D;
3479     output reg Q;
3480     always @* begin
3481         if (R == 0)
3482                     Q <= 1;
3483         else if (E == 1)
3484             Q <= D;
3485     end
3486 endmodule
```

yosys> help $_DLATCH_PP0_

A positive enable D-type latch with positive polarity reset.

```
Truth table:    E R D | Q
               -------+---
                - 1 - | 0
                1 - d | d
                - - - | q
```

Simulation model (verilog)

Listing 9.244: simcells.v

```
3501 module \$_DLATCH_PP0_ (E, R, D, Q);
3502     input E, R, D;
3503     output reg Q;
3504     always @* begin
3505         if (R == 1)
3506                     Q <= 0;
3507         else if (E == 1)
3508             Q <= D;
3509     end
3510 endmodule
```

yosys> help $_DLATCH_PP1_

A positive enable D-type latch with positive polarity set.

```
Truth table:    E R D | Q
               -------+---
                - 1 - | 1
                1 - d | d
                - - - | q
```

Simulation model (verilog)

Listing 9.245: simcells.v

```
3525 module \$_DLATCH_PP1_ (E, R, D, Q);
3526     input E, R, D;
3527     output reg Q;
3528     always @* begin
3529         if (R == 1)
3530                     Q <= 1;
3531         else if (E == 1)
3532             Q <= D;
3533     end
3534 endmodule
```

yosys> help $_DLATCH_P_

A positive enable D-type latch.

```
Truth table:    E D | Q
               -----+---
                1 d | d
                - - | q
```

Simulation model (verilog)

Listing 9.246: simcells.v

```
3335 module \$_DLATCH_P_ (E, D, Q);
3336     input E, D;
3337     output reg Q;
3338     always @* begin
3339         if (E == 1)
3340             Q <= D;
3341     end
3342 endmodule
```

yosys> help $_SR_NN_

A set-reset latch with negative polarity SET and negative polarity RESET.

```
Truth table:    S R | Q
               -----+---
                - 0 | 0
                0 - | 1
                - - | q
```

Simulation model (verilog)

Listing 9.247: simcells.v

```
module \$_SR_NN_ (S, R, Q);
    input S, R;
    output reg Q;
    always @* begin
        if (R == 0)
            Q <= 0;
        else if (S == 0)
            Q <= 1;
    end
endmodule
```

yosys> help $_SR_NP_

A set-reset latch with negative polarity SET and positive polarity RESET.

```
Truth table:    S R | Q
               -----+---
                - 1 | 0
                0 - | 1
                - - | q
```

Simulation model (verilog)

Listing 9.248: simcells.v

```
module \$_SR_NP_ (S, R, Q);
    input S, R;
    output reg Q;
    always @* begin
        if (R == 1)
            Q <= 0;
        else if (S == 0)
            Q <= 1;
    end
endmodule
```

yosys> help $_SR_PN_

A set-reset latch with positive polarity SET and negative polarity RESET.

```
Truth table:    S R | Q
               -----+---
                - 0 | 0
                1 - | 1
                - - | q
```

Simulation model (verilog)

Listing 9.249: simcells.v

```
module \$_SR_PN_ (S, R, Q);
    input S, R;
```

(continues on next page)

(continued from previous page)

```
    output reg Q;
    always @* begin
        if (R == 0)
            Q <= 0;
        else if (S == 1)
            Q <= 1;
    end
endmodule
```

yosys> help $_SR_PP_

A set-reset latch with positive polarity SET and positive polarity RESET.

```
Truth table:    S R | Q
               -----+---
                - 1 | 0
                1 - | 1
                - - | q
```

Simulation model (verilog)

Listing 9.250: simcells.v

```
module \$_SR_PP_ (S, R, Q);
    input S, R;
    output reg Q;
    always @* begin
        if (R == 1)
            Q <= 0;
        else if (S == 1)
            Q <= 1;
    end
endmodule
```

9.2.5 Other gate-level cells

Other gate-level cells

yosys> help $_TBUF_

A tri-state buffer.

```
Truth table:    A E | Y
               -----+---
                a 1 | a
                - 0 | z
```

Properties

is_evaluable

Simulation model (verilog)

Listing 9.251: simcells.v

```
473 module \$_TBUF_ (A, E, Y);
474     input A, E;
475     output Y;
476     assign Y = E ? A : 1'bz;
477 endmodule
```

9.3 Cell properties

is_evaluable

These cells are able to be used in conjunction with the *eval* command. Some passes, such as *opt_expr*, may also be able to perform additional optimizations on cells which are evaluable.

x-aware

Some passes will treat these cells as the non 'x' aware cell. For example, during synthesis *$eqx* will typically be treated as *$eq*.

x-output

These cells can produce 'x' output even if all inputs are defined. For example, a *$div* cell with divisor (B) equal to zero has undefined output.

Refer to the propindex for the list of cells with a given property.

CHAPTER

TEN

COMMAND LINE REFERENCE

```
Usage:
  ./yosys [OPTION...] [<infile> [..]]

 operation options:
  -b, --backend <backend>       use <backend> for the output file specified on the␣
↪command line
  -f, --frontend <frontend>     use <frontend> for the input files on the command line
  -s, --scriptfile <scriptfile>
                                execute the commands in <scriptfile>
  -c, --tcl-scriptfile <tcl_scriptfile>
                                execute the commands in the TCL <tcl_scriptfile> (see
↪'help tcl' for details)
  -C, --tcl-interactive         enters TCL interactive shell mode
  -p, --commands <commands>     execute <commands> (to chain commands, separate them␣
↪with semicolon + whitespace: 'cmd1; cmd2')
  -r, --top <top>               elaborate the specified HDL <top> module
  -m, --plugin <plugin>         load the specified <plugin> module
  -D, --define <define>[=<value>]
                                set the specified Verilog define to <value> if supplied␣
↪via command "read -define"
  -S, --synth                   shortcut for calling the "synth" command, a default␣
↪script for transforming the Verilog input to a gate-level netlist. For example: yosys -
↪o output.blif -S input.v For more complex synthesis jobs it is recommended to use the␣
↪read_* and write_* commands in a script file instead of specifying input and output␣
↪files on the command line.
  -H                            print the command list
  -h, --help [<command>]        print this help message. If given, print help for
↪<command>.
  -V, --version                 print version information and exit

 logging options:
  -Q                            suppress printing of banner (copyright, disclaimer,␣
↪version)
  -T                            suppress printing of footer (log hash, version, timing␣
↪statistics)
  -q, --quiet                   quiet operation. Only write warnings and error messages␣
↪to console. Use this option twice to also quiet warning messages
  -v, --verbose <level>         print log headers up to <level> to the console. Implies -
↪q for everything except the 'End of script.' message.
  -t, --timestamp               annotate all log messages with a time stamp
```

(continues on next page)

(continued from previous page)

```
  -d, --detailed-timing         print more detailed timing stats at exit
  -l, --logfile <logfile>       write log messages to <logfile>
  -L, --line-buffered-logfile <logfile>
                                like -l but open <logfile> in line buffered mode
  -o, --outfile <outfile>       write the design to <outfile> on exit
  -P, --dump-design <header_id>[:<filename>]
                                dump the design when printing the specified log header␣
↪to a file. yosys_dump_<header_id>.il is used as filename if none is specified. Use 'ALL
↪' as <header_id> to dump at every header.
  -W, --warning-as-warning <regex>
                                print a warning for all log messages matching <regex>
  -w, --warning-as-message <regex>
                                if a warning message matches <regex>, it is printed as␣
↪regular message instead
  -e, --warning-as-error <regex>
                                if a warning message matches <regex>, it is printed as␣
↪error message instead
  -E, --deps-file <depsfile>    write a Makefile dependencies file <depsfile> with input␣
↪and output file names

 developer options:
  -X, --trace                   enable tracing of core data structure changes. for␣
↪debugging
  -M, --randomize-pointers      will slightly randomize allocated pointer addresses. for␣
↪debugging
      --autoidx <idx>           start counting autoidx up from <seed>, similar effect to␣
↪--hash-seed
      --hash-seed <seed>        mix up hashing values with <seed>, for extreme␣
↪optimization and testing
  -A, --abort                   will call abort() at the end of the script. for debugging
  -x, --experimental <feature>  do not print warnings for the experimental <feature>
  -g, --debug                   globally enable debug log messages
      --perffile <perffile>     write a JSON performance log to <perffile>
```

10.1 Yosys environment variables

HOME
: Yosys command history is stored in `$HOME/.yosys_history`. Graphics (from *show* and *viz* commands) will output to this directory by default. This environment variable is also used in some cases for resolving filenames with `~`.

PATH
: May be used in OpenBSD builds for finding the location of Yosys executable.

TMPDIR
: Used for storing temporary files.

ABC
: When compiling Yosys with out-of-tree ABC using **ABCEXTERNAL**, this variable can be used to override the external ABC executable.

YOSYS_NOVERIFIC

If Yosys was built with Verific, this environment variable can be used to temporarily disable Verific support.

`YOSYS_COVER_DIR and YOSYS_COVER_FILE`
When using code coverage, these environment variables control the output file name/location.

`YOSYS_ABORT_ON_LOG_ERROR`
Can be used for debugging Yosys internals. Setting it to 1 causes abort() to be called when Yosys terminates with an error message.

10.2 abc - use ABC for technology mapping

```
yosys> help abc
```

```
    abc [options] [selection]

This pass uses the ABC tool [1] for technology mapping of yosys's internal gate
library to a target architecture.

    -exe <command>
        use the specified command instead of "<yosys-bindir>/yosys-abc" to execute ABC.
        This can e.g. be used to call a specific version of ABC or a wrapper.

    -script <file>
        use the specified ABC script file instead of the default script.

        if <file> starts with a plus sign (+), then the rest of the filename
        string is interpreted as the command string to be passed to ABC. The
        leading plus sign is removed and all commas (,) in the string are
        replaced with blanks before the string is passed to ABC.

        if no -script parameter is given, the following scripts are used:

        for -liberty/-genlib without -constr:
          strash; &get -n; &fraig -x; &put; scorr; dc2; dretime; strash;
               &get -n; &dch -f; &nf {D}; &put

        for -liberty/-genlib with -constr:
          strash; &get -n; &fraig -x; &put; scorr; dc2; dretime; strash;
               &get -n; &dch -f; &nf {D}; &put; buffer; upsize {D};
               dnsize {D}; stime -p

        for -lut/-luts (only one LUT size):
          strash; &get -n; &fraig -x; &put; scorr; dc2; dretime; strash;
               dch -f; if; mfs2; lutpack {S}

        for -lut/-luts (different LUT sizes):
          strash; &get -n; &fraig -x; &put; scorr; dc2; dretime; strash;
               dch -f; if; mfs2

        for -sop:
          strash; &get -n; &fraig -x; &put; scorr; dc2; dretime; strash;
               dch -f; cover {I} {P}
```

(continues on next page)

(continued from previous page)

```
    otherwise:
      strash; &get -n; &fraig -x; &put; scorr; dc2; dretime; strash;
           &get -n; &dch -f; &nf {D}; &put

-fast
    use different default scripts that are slightly faster (at the cost
    of output quality):

    for -liberty/-genlib without -constr:
      strash; dretime; map {D}

    for -liberty/-genlib with -constr:
      strash; dretime; map {D}; buffer; upsize {D}; dnsize {D};
           stime -p

    for -lut/-luts:
      strash; dretime; if

    for -sop:
      strash; dretime; cover {I} {P}

    otherwise:
      strash; dretime; map

-liberty <file>
    generate netlists for the specified cell library (using the liberty
    file format).

-dont_use <cell_name>
    generate netlists for the specified cell library (using the liberty
    file format).

-genlib <file>
    generate netlists for the specified cell library (using the SIS Genlib
    file format).

-constr <file>
    pass this file with timing constraints to ABC.
    use with -liberty/-genlib.

    a constr file contains two lines:
        set_driving_cell <cell_name>
        set_load <floating_point_number>

    the set_driving_cell statement defines which cell type is assumed to
    drive the primary inputs and the set_load statement sets the load in
    femtofarads for each primary output.

-D <picoseconds>
    set delay target. the string {D} in the default scripts above is
    replaced by this option when used, and an empty string otherwise.
```

(continues on next page)

(continued from previous page)

```
    this also replaces 'dretime' with 'dretime; retime -o {D}' in the
    default scripts above.

-I <num>
    maximum number of SOP inputs.
    (replaces {I} in the default scripts above)

-P <num>
    maximum number of SOP products.
    (replaces {P} in the default scripts above)

-S <num>
    maximum number of LUT inputs shared.
    (replaces {S} in the default scripts above, default: -S 1)

-lut <width>
    generate netlist using luts of (max) the specified width.

-lut <w1>:<w2>
    generate netlist using luts of (max) the specified width <w2>. All
    luts with width <= <w1> have constant cost. for luts larger than <w1>
    the area cost doubles with each additional input bit. the delay cost
    is still constant for all lut widths.

-luts <cost1>,<cost2>,<cost3>,<sizeN>:<cost4-N>,..
    generate netlist using luts. Use the specified costs for luts with 1,
    2, 3, .. inputs.

-sop
    map to sum-of-product cells and inverters

-g type1,type2,...
    Map to the specified list of gate types. Supported gates types are:
       AND, NAND, OR, NOR, XOR, XNOR, ANDNOT, ORNOT, MUX,
       NMUX, AOI3, OAI3, AOI4, OAI4.
    (The NOT gate is always added to this list automatically.)

    The following aliases can be used to reference common sets of gate
    types:
      simple: AND OR XOR MUX
      cmos2:  NAND NOR
      cmos3:  NAND NOR AOI3 OAI3
      cmos4:  NAND NOR AOI3 OAI3 AOI4 OAI4
      cmos:   NAND NOR AOI3 OAI3 AOI4 OAI4 NMUX MUX XOR XNOR
      gates:  AND NAND OR NOR XOR XNOR ANDNOT ORNOT
      aig:    AND NAND OR NOR ANDNOT ORNOT

    The alias 'all' represent the full set of all gate types.

    Prefix a gate type with a '-' to remove it from the list. For example
    the arguments 'AND,OR,XOR' and 'simple,-MUX' are equivalent.
```

(continues on next page)

(continued from previous page)

```
        The default is 'all,-NMUX,-AOI3,-OAI3,-AOI4,-OAI4'.

    -dff
        also pass $_DFF_?_ and $_DFFE_??_ cells through ABC. modules with many
        clock domains are automatically partitioned in clock domains and each
        domain is passed through ABC independently.

    -clk [!]<clock-signal-name>[,[!]<enable-signal-name>]
        use only the specified clock domain. this is like -dff, but only FF
        cells that belong to the specified clock domain are used.

    -keepff
        set the "keep" attribute on flip-flop output wires. (and thus preserve
        them, for example for equivalence checking.)

    -nocleanup
        when this option is used, the temporary files created by this pass
        are not removed. this is useful for debugging.

    -showtmp
        print the temp dir name in log. usually this is suppressed so that the
        command output is identical across runs.

    -markgroups
        set a 'abcgroup' attribute on all objects created by ABC. The value of
        this attribute is a unique integer for each ABC process started. This
        is useful for debugging the partitioning of clock domains.

    -dress
        run the 'dress' command after all other ABC commands. This aims to
        preserve naming by an equivalence check between the original and
        post-ABC netlists (experimental).

When no target cell library is specified the Yosys standard cell library is
loaded into ABC before the ABC script is executed.

Note that this is a logic optimization pass within Yosys that is calling ABC
internally. This is not going to "run ABC on your design". It will instead run
ABC on logic snippets extracted from your design. You will not get any useful
output when passing an ABC script that writes a file. Instead write your full
design as BLIF file with write_blif and then load that into ABC externally if
you want to use ABC to convert your design into another format.

[1] http://www.eecs.berkeley.edu/~alanmi/abc/
```

10.3 abc9 - use ABC9 for technology mapping

yosys> help **abc9**

```
    abc9 [options] [selection]

```

(continues on next page)

(continued from previous page)

```
This script pass performs a sequence of commands to facilitate the use of the
ABC tool [1] for technology mapping of the current design to a target FPGA
architecture. Only fully-selected modules are supported.

    -run <from_label>:<to_label>
        only run the commands between the labels (see below). an empty
        from label is synonymous to 'begin', and empty to label is
        synonymous to the end of the command list.

    -exe <command>
        use the specified command instead of "<yosys-bindir>/yosys-abc" to execute ABC.
        This can e.g. be used to call a specific version of ABC or a wrapper.

    -script <file>
        use the specified ABC script file instead of the default script.

        if <file> starts with a plus sign (+), then the rest of the filename
        string is interpreted as the command string to be passed to ABC. The
        leading plus sign is removed and all commas (,) in the string are
        replaced with blanks before the string is passed to ABC.

        if no -script parameter is given, the following scripts are used:
          &scorr; &sweep; &dc2; &dch -f; &ps; &if {C} {W} {D} {R} -v; &mfs

    -fast
        use different default scripts that are slightly faster (at the cost
        of output quality):
          &if {C} {W} {D} {R} -v

    -D <picoseconds>
        set delay target. the string {D} in the default scripts above is
        replaced by this option when used, and an empty string otherwise
        (indicating best possible delay).

    -lut <width>
        generate netlist using luts of (max) the specified width.

    -lut <w1>:<w2>
        generate netlist using luts of (max) the specified width <w2>. All
        luts with width <= <w1> have constant cost. for luts larger than <w1>
        the area cost doubles with each additional input bit. the delay cost
        is still constant for all lut widths.

    -lut <file>
        pass this file with lut library to ABC.

    -luts <cost1>,<cost2>,<cost3>,<sizeN>:<cost4-N>,..
        generate netlist using luts. Use the specified costs for luts with 1,
        2, 3, .. inputs.

    -maxlut <width>
        when auto-generating the lut library, discard all luts equal to or
```

(continues on next page)

(continued from previous page)

```
        greater than this size (applicable when neither -lut nor -luts is
        specified).

    -dff
        also pass $_DFF_[NP]_ cells through to ABC. modules with many clock
        domains are supported and automatically partitioned by ABC.

    -nocleanup
        when this option is used, the temporary files created by this pass
        are not removed. this is useful for debugging.

    -showtmp
        print the temp dir name in log. usually this is suppressed so that the
        command output is identical across runs.

    -box <file>
        pass this file with box library to ABC.

Note that this is a logic optimization pass within Yosys that is calling ABC
internally. This is not going to "run ABC on your design". It will instead run
ABC on logic snippets extracted from your design. You will not get any useful
output when passing an ABC script that writes a file. Instead write your full
design as an XAIGER file with `write_xaiger' and then load that into ABC
externally if you want to use ABC to convert your design into another format.

[1] http://www.eecs.berkeley.edu/~alanmi/abc/


    check:
        abc9_ops -check [-dff]    (option if -dff)

    map:
        abc9_ops -prep_hier [-dff]    (option if -dff)
        scc -specify -set_attr abc9_scc_id {}
        abc9_ops -prep_bypass [-prep_dff]    (option if -dff)
        design -stash $abc9
        design -load $abc9_map
        proc
        wbflip
        techmap -wb -map %$abc9 -map +/techmap.v A:abc9_flop
        opt -nodffe -nosdff
        abc9_ops -prep_dff_submod                                              ␣
↪(only if -dff)
        setattr -set submod "$abc9_flop" t:$_DFF_?_ %ci* %co* t:$_DFF_?_ %d    ␣
↪(only if -dff)
        submod                                                                 ␣
↪(only if -dff)
        setattr -mod -set whitebox 1 -set abc9_flop 1 -set abc9_box 1 *_$abc9_flop ␣
↪(only if -dff)
        foreach module in design
            rename <module-name>_$abc9_flop _TECHMAP_REPLACE_                  ␣
↪(only if -dff)
```

(continues on next page)

(continued from previous page)

```
        abc9_ops -prep_dff_unmap                                                    ␣
↪(only if -dff)
        design -copy-to $abc9 =*_$abc9_flop                                         ␣
↪(only if -dff)
        delete =*_$abc9_flop                                                        ␣
↪(only if -dff)
        design -stash $abc9_map
        design -load $abc9
        design -delete $abc9
        techmap -wb -max_iter 1 -map %$abc9_map -map +/abc9_map.v [-D DFF]    (option if␣
↪-dff)
        design -delete $abc9_map

    pre:
        read_verilog -icells -lib -specify +/abc9_model.v
        abc9_ops -break_scc -prep_delays -prep_xaiger [-dff]    (option for -dff)
        abc9_ops -prep_lut <maxlut>    (skip if -lut or -luts)
        abc9_ops -prep_box    (skip if -box)
        design -stash $abc9
        design -load $abc9_holes
        techmap -wb -map %$abc9 -map +/techmap.v
        opt -purge
        aigmap
        design -stash $abc9_holes
        design -load $abc9
        design -delete $abc9

    exe:
        aigmap
        foreach module in selection
            abc9_ops -write_lut <abc-temp-dir>/input.lut    (skip if '-lut' or '-luts')
            abc9_ops -write_box <abc-temp-dir>/input.box    (skip if '-box')
            write_xaiger -map <abc-temp-dir>/input.sym [-dff] <abc-temp-dir>/input.xaig
            abc9_exe [options] -cwd <abc-temp-dir> -lut [<abc-temp-dir>/input.lut] -box [
↪<abc-temp-dir>/input.box]
            read_aiger -xaiger -wideports -module_name <module-name>$abc9 -map <abc-temp-
↪dir>/input.sym <abc-temp-dir>/output.aig
            abc9_ops -reintegrate [-dff]

    unmap:
        techmap -wb -map %$abc9_unmap -map +/abc9_unmap.v
        design -delete $abc9_unmap
        design -delete $abc9_holes
        delete =*_$abc9_byp
        setattr -mod -unset abc9_box_id
```

10.4 abc9_exe - use ABC9 for technology mapping

```
yosys> help abc9_exe
```

```
    abc9_exe [options]


This pass uses the ABC tool [1] for technology mapping of the top module
(according to the (* top *) attribute or if only one module is currently
selected) to a target FPGA architecture.

    -exe <command>
        use the specified command instead of "<yosys-bindir>/yosys-abc" to execute ABC.
        This can e.g. be used to call a specific version of ABC or a wrapper.

    -script <file>
        use the specified ABC script file instead of the default script.

        if <file> starts with a plus sign (+), then the rest of the filename
        string is interpreted as the command string to be passed to ABC. The
        leading plus sign is removed and all commas (,) in the string are
        replaced with blanks before the string is passed to ABC.

        if no -script parameter is given, the following scripts are used:
          &scorr; &sweep; &dc2; &dch -f; &ps; &if {C} {W} {D} {R} -v; &mfs

    -fast
        use different default scripts that are slightly faster (at the cost
        of output quality):
          &if {C} {W} {D} {R} -v

    -constr <file>
        pass this file with timing constraints to ABC.
        use with -liberty.

        a constr file contains two lines:
            set_driving_cell <cell_name>
            set_load <floating_point_number>

        the set_driving_cell statement defines which cell type is assumed to
        drive the primary inputs and the set_load statement sets the load in
        femtofarads for each primary output.

    -liberty <file>
        read the given Liberty file as a description of the target cell library.
        this option can be used multiple times.

    -dont_use <cell_name>
        avoid usage of the technology cell <cell_name> when mapping the design.
        this option can be used multiple times.

    -D <picoseconds>
        set delay target. the string {D} in the default scripts above is
        replaced by this option when used, and an empty string otherwise
        (indicating best possible delay).
```

(continues on next page)

(continued from previous page)

```
    -lut <width>
        generate netlist using luts of (max) the specified width.

    -lut <w1>:<w2>
        generate netlist using luts of (max) the specified width <w2>. All
        luts with width <= <w1> have constant cost. for luts larger than <w1>
        the area cost doubles with each additional input bit. the delay cost
        is still constant for all lut widths.

    -lut <file>
        pass this file with lut library to ABC.

    -luts <cost1>,<cost2>,<cost3>,<sizeN>:<cost4-N>,..
        generate netlist using luts. Use the specified costs for luts with 1,
        2, 3, .. inputs.

    -showtmp
        print the temp dir name in log. usually this is suppressed so that the
        command output is identical across runs.

    -box <file>
        pass this file with box library to ABC.

    -cwd <dir>
        use this as the current working directory, inside which the 'input.xaig'
        file is expected. temporary files will be created in this directory, and
        the mapped result will be written to 'output.aig'.

Note that this is a logic optimization pass within Yosys that is calling ABC
internally. This is not going to "run ABC on your design". It will instead run
ABC on logic snippets extracted from your design. You will not get any useful
output when passing an ABC script that writes a file. Instead write your full
design as BLIF file with write_blif and then load that into ABC externally if
you want to use ABC to convert your design into another format.

[1] http://www.eecs.berkeley.edu/~alanmi/abc/
```

10.5 abc9_ops - helper functions for ABC9

yosys> help **abc9_ops**

```
    abc9_ops [options] [selection]

This pass contains a set of supporting operations for use during ABC technology
mapping, and is expected to be called in conjunction with other operations from
the `abc9' script pass. Only fully-selected modules are supported.

    -check
        check that the design is valid, e.g. (* abc9_box_id *) values are
        unique, (* abc9_carry *) is only given for one input/output port, etc.
```

(continues on next page)

(continued from previous page)

```
    -prep_hier
        derive all used (* abc9_box *) or (* abc9_flop *) (if -dff option)
        whitebox modules. with (* abc9_flop *) modules, only those containing
        $dff/$_DFF_[NP]_ cells with zero initial state -- due to an ABC
        limitation -- will be derived.

    -prep_bypass
        create techmap rules in the '$abc9_map' and '$abc9_unmap' designs for
        bypassing sequential (* abc9_box *) modules using a combinatorial box
        (named *_$abc9_byp). bypassing is necessary if sequential elements (e.g.
        $dff, $mem, etc.) are discovered inside so that any combinatorial paths
        will be correctly captured. this bypass box will only contain ports that
        are referenced by a simple path declaration ($specify2 cell) inside a
        specify block.

    -prep_dff
        select all (* abc9_flop *) modules instantiated in the design and store
        in the named selection '$abc9_flops'.

    -prep_dff_submod
        within (* abc9_flop *) modules, rewrite all edge-sensitive path
        declarations and $setup() timing checks ($specify3 and $specrule cells)
        that share a 'DST' port with the $_DFF_[NP]_.Q port from this 'Q' port
        to the DFF's 'D' port. this is to prepare such specify cells to be moved
        into the flop box.

    -prep_dff_unmap
        populate the '$abc9_unmap' design with techmap rules for mapping
        *_$abc9_flop cells back into their derived cell types (where the rules
        created by -prep_hier will then map back to the original cell with
        parameters).

    -prep_delays
        insert `$__ABC9_DELAY' blackbox cells into the design to account for
        certain required times.

    -break_scc
        for an arbitrarily chosen cell in each unique SCC of each selected
        module (tagged with an (* abc9_scc_id = <int> *) attribute) interrupt
        all wires driven by this cell's outputs with a temporary
        $__ABC9_SCC_BREAKER cell to break the SCC.

    -prep_xaiger
        prepare the design for XAIGER output. this includes computing the
        topological ordering of ABC9 boxes, as well as preparing the
        '$abc9_holes' design that contains the logic behaviour of ABC9
        whiteboxes.

    -dff
        consider flop cells (those instantiating modules marked with
        (* abc9_flop *)) during -prep_{delays,xaiger,box}.
```

(continues on next page)

(continued from previous page)

```
    -prep_lut <maxlut>
        pre-compute the lut library by analysing all modules marked with
        (* abc9_lut=<area> *).

    -write_lut <dst>
        write the pre-computed lut library to <dst>.

    -prep_box
        pre-compute the box library by analysing all modules marked with
        (* abc9_box *).

    -write_box <dst>
        write the pre-computed box library to <dst>.

    -reintegrate
        for each selected module, re-intergrate the module '<module-name>$abc9'
        by first recovering ABC9 boxes, and then stitching in the remaining
        primary inputs and outputs.
```

10.6 abc_new - (experimental) use ABC for SC technology mapping (new)

yosys> help **abc_new**

```
    abc_new [options] [selection]

This command uses the ABC tool [1] to optimize the current design and map it to
the target standard cell library.

    -run <from_label>:<to_label>
        only run the commands between the labels (see below). an empty
        from label is synonymous to 'begin', and empty to label is
        synonymous to the end of the command list.

    -exe <command>
    -script <file>
    -D <picoseconds>
    -constr <file>
    -dont_use <cell_name>
    -liberty <file>
        these options are passed on to the 'abc9_exe' command which invokes
        the ABC tool on individual modules of the design. please see
        'help abc9_exe' for more details

[1] http://www.eecs.berkeley.edu/~alanmi/abc/


    check:
        abc9_ops -check
```

(continues on next page)

(continued from previous page)

```
    prep_boxes:
        box_derive
        abc9_ops -prep_box

    map:
        foreach module in selection
          abc9_ops -write_box <abc-temp-dir>/input.box
          write_xaiger2 -mapping_prep -map2 <abc-temp-dir>/input.map2 <abc-temp-dir>/
↪input.xaig
          abc9_exe [options] -cwd <abc-temp-dir> -box <abc-temp-dir>/input.box
          read_xaiger2 -sc_mapping -module_name <module> -map2 <abc-temp-dir>/input.map2
↪<abc-temp-dir>/output.aig


WARNING: THE 'abc_new' COMMAND IS EXPERIMENTAL.
```

10.7 abstract - replace signals with abstract values during formal verification

yosys> help **abstract**

```
    abstract [mode] [options] [selection]

Perform abstraction of signals within the design. Abstraction replaces a signal
with an unconstrained abstract value that can take an arbitrary concrete value
during formal verification. The mode and options control when a signal should
be abstracted and how it should affect FFs present in the design.

Modes:
    -state
        The selected FFs will be modified to load a new abstract value on every
        active clock edge, async reset or async load. This is independent of any
        clock enable that may be present on the FF cell. Conditional abstraction
        is supported with the -enable/-enabeln options. If present, the condition
        is sampled at the same time as the FF would smaple the correspnding data
        or async-data input whose value will be replaced with an abstract value.

        The selection can be used to specify which state bits to abstract. For
        each selected wire, any state bits that the wire is driven by will be
        abstracted. For a selected FF cell, all of its state is abstracted.
        Individual bits of a single wire can be abtracted using the -slice and
        -rtlilslice options.

    -init
        The selected FFs will be modified to have an abstract initial value.
        The -enable/-enablen options are not supported in this mode.

        The selection is used in the same way as it is for the -state mode.

    -value
```

(continues on next page)

(continued from previous page)

```
        The drivers of the selected signals will be replaced with an abstract
        value. In this mode, the abstract value can change at any time and is
        not synchronized to any clock or other signal. Conditional abstraction
        is supported with the -enable/-enablen options. The condition will
        combinationally select between the original driver and the abstract
        value.

        The selection can be used to specify which output bits of which drivers
        to abtract. For a selected cell, all its output bits will be abstracted.
        For a selected wire, every output bit that is driving the wire will be
        abstracted. Individual bits of a single wire can be abstracted using the
        -slice and -rtlilslice options.

    -enable <wire-name>
    -enablen <wire-name>
        Perform conditional abstraction with a named single bit wire as
        condition. For -enable the wire is used as an active-high condition and
        for -enablen as an active-low condition. See the description of the
        -state and -value modes for details on how the condition affects the
        abstractions performed by either mode. This option is not supported in
        the -init mode.

    -slice <lhs>:<rhs>
    -slice <index>
    -rtlilslice <lhs>:<rhs>
    -rtlilslice <index>
        Limit the abstraction to a slice of a single selected wire. The targeted
        bits of the wire can be given as an inclusive range of indices or as a
        single index. When using the -slice option, the indices are interpreted
        following the source level declaration of the wire. This means the
        -slice option will respect declarations with a non-zero-based index range
        or with reversed bitorder. The -rtlilslice options will always use
        zero-based indexing where index 0 corresponds to the least significant
        bit of the wire.
```

10.8 add - add objects to the design

yosys> help **add**

```
    add <command> [selection]

This command adds objects to the design. It operates on all fully selected
modules. So e.g. 'add -wire foo' will add a wire foo to all selected modules.


    add {-wire|-input|-inout|-output} <name> <width> [selection]

Add a wire (input, inout, output port) with the given name and width. The
command will fail if the object exists already and has different properties
than the object to be created.
```

(continues on next page)

(continued from previous page)

```
    add -global_input <name> <width> [selection]

Like 'add -input', but also connect the signal between instances of the
selected modules.


    add {-assert|-assume|-live|-fair|-cover} <name1> [-if <name2>]

Add an $assert, $assume, etc. cell connected to a wire named name1, with its
enable signal optionally connected to a wire named name2 (default: 1'b1).


    add -mod <name[s]>

Add module[s] with the specified name[s].
```

10.9 aigmap - map logic to and-inverter-graph circuit

yosys> help **aigmap**

```
    aigmap [options] [selection]

Replace all logic cells with circuits made of only $_AND_ and
$_NOT_ cells.

    -nand
        Enable creation of $_NAND_ cells

    -select
        Overwrite replaced cells in the current selection with new $_AND_,
        $_NOT_, and $_NAND_, cells
```

10.10 alumacc - extract ALU and MACC cells

yosys> help **alumacc**

```
    alumacc [selection]

This pass translates arithmetic operations like $add, $mul, $lt, etc. to $alu
and $macc cells.
```

10.11 anlogic_eqn - Anlogic: Calculate equations for luts

yosys> help **anlogic_eqn**

```
    anlogic_eqn [selection]

Calculate equations for luts since bitstream generator depends on it.
```

10.12 anlogic_fixcarry - Anlogic: fix carry chain

yosys> help **anlogic_fixcarry**

```
    anlogic_fixcarry [options] [selection]

Add Anlogic adders to fix carry chain if needed.
```

10.13 assertpmux - adds asserts for parallel muxes

yosys> help **assertpmux**

```
    assertpmux [options] [selection]

This command adds asserts to the design that assert that all parallel muxes
($pmux cells) have a maximum of one of their inputs enable at any time.

    -noinit
        do not enforce the pmux condition during the init state

    -always
        usually the $pmux condition is only checked when the $pmux output
        is used by the mux tree it drives. this option will deactivate this
        additional constraint and check the $pmux condition always.
```

10.14 async2sync - convert async FF inputs to sync circuits

yosys> help **async2sync**

```
    async2sync [options] [selection]

This command replaces async FF inputs with sync circuits emulating the same
behavior for when the async signals are actually synchronized to the clock.

This pass assumes negative hold time for the async FF inputs. For example when
a reset deasserts with the clock edge, then the FF output will still drive the
reset value in the next cycle regardless of the data-in value at the time of
the clock edge.

    -nolower
        Do not automatically run 'chformal -lower' to lower $check cells.
```

10.15 attrmap - renaming attributes

yosys> help **attrmap**

```
    attrmap [options] [selection]

This command renames attributes and/or maps key/value pairs to
```

(continues on next page)

(continued from previous page)

```
other key/value pairs.

    -tocase <name>
        Match attribute names case-insensitively and set it to the specified
        name.

    -rename <old_name> <new_name>
        Rename attributes as specified

    -map <old_name>=<old_value> <new_name>=<new_value>
        Map key/value pairs as indicated.

    -imap <old_name>=<old_value> <new_name>=<new_value>
        Like -map, but use case-insensitive match for <old_value> when
        it is a string value.

    -remove <name>=<value>
        Remove attributes matching this pattern.

    -modattr
        Operate on module attributes instead of attributes on wires and cells.

For example, mapping Xilinx-style "keep" attributes to Yosys-style:

    attrmap -tocase keep -imap keep="true" keep=1 \
            -imap keep="false" keep=0 -remove keep=0
```

10.16 attrmvcp - move or copy attributes from wires to driving cells

yosys> help **attrmvcp**

```
    attrmvcp [options] [selection]

Move or copy attributes on wires to the cells driving them.

    -copy
        By default, attributes are moved. This will only add
        the attribute to the cell, without removing it from
        the wire.

    -purge
        If no selected cell consumes the attribute, then it is
        left on the wire by default. This option will cause the
        attribute to be removed from the wire, even if no selected
        cell takes it.

    -driven
        By default, attriburtes are moved to the cell driving the
        wire. With this option set it will be moved to the cell
        driven by the wire instead.
```

(continues on next page)

(continued from previous page)

```
    -attr <attrname>
        Move or copy this attribute. This option can be used
        multiple times.
```

10.17 autoname - automatically assign names to objects

yosys> help **autoname**

```
    autoname [selection]

Assign auto-generated public names to objects with private names (the ones
with $-prefix).
```

10.18 blackbox - convert modules into blackbox modules

yosys> help **blackbox**

```
    blackbox [options] [selection]

Convert modules into blackbox modules (remove contents and set the blackbox
module attribute).
```

10.19 bmuxmap - transform $bmux cells to trees of $mux cells

yosys> help **bmuxmap**

```
    bmuxmap [selection]

This pass transforms $bmux cells to trees of $mux cells.

    -pmux
        transform to $pmux instead of $mux cells.
```

10.20 booth - map $mul cells to Booth multipliers

yosys> help **booth**

```
    booth [selection]

This pass replaces multiplier cells with a radix-4 Booth-encoded implementation.
It operates on $mul cells whose width of operands is at least 4x4 and whose
width of result is at least 8.

    -lowpower
        use an alternative low-power architecture for the generated multiplier
        (signed multipliers only)
```

10.21 box_derive - derive box modules

yosys> help **box_derive**

```
    box_derive [-base <base_module>] [-naming_attr <attr>] [selection]

As part of the assembly of the design hierarchy done by the 'hierarchy' command,
specializations of parametric modules are derived on demand: for each choice of
parameter values appearing in the design, a copy of the parametric module is
derived which is specialized to that choice.

This derivation process ignores blackboxes and whiteboxes (boxes). To supplement,
this 'box_derive' command can be used to request the derivation of modules based
on box instances appearing in the design, which is desirable in certain use
cases. Only the selected cells are considered as the instances that steer the
derivation process.

    -base <base_module>
        instead of deriving the module that directly corresponds to each box
        instance, derive a specialization of <base_module> (this option applies
        to all selected box cells)

    -naming_attr <attr>
        once a specialization is derived, use the value of the module attribute
        <attr> for a name which should be used for the derived module (this
        replaces the internal Yosys naming scheme in which the names of derived
        modules start with '$paramod$')
```

10.22 bufnorm - (experimental) convert design into buffered-normalized form

yosys> help **bufnorm**

```
    bufnorm [options] [selection]

Insert buffer cells into the design as needed, to make sure that each wire
has exactly one driving cell port, and aliasing wires are buffered using
buffer cells, than can be chained in a canonical order.

Running 'bufnorm' on the whole design enters 'buffered-normalized mode'.

    -buf
        Create $buf cells for all buffers. The default is to use $_BUF_ cells
        for sigle-bit buffers and $buf cells only for multi-bit buffers.

    -chain
        Chain all alias wires. By default only wires with positive-valued
        'chain' or 'keep' attribute on them are chained.

    -output
        Enable chaining of ouput ports wires.
```

(continues on next page)

(continued from previous page)

```
    -public
        Enable chaining of wires wth public names.

    -nochain
        Disable chaining of wires with 'chain' attribute.

    -nokeep
        Disable chaining of wires with 'keep' attribute.

    -flat
        Alias for -nokeep and -nochain.

    -nosticky
        Disable 'sticky' behavior of output ports already driving whole
        wires, and always enforce canonical sort order instead.

    -alphasort
        Strictly use alphanumeric sort for chain-order. (Default is
        to chain 'keep' wires first, then ports in declaration order,
        and then the other wires in alphanumeric sort order.)

Run 'bufnorm' with -pos, -bits, or -conn on the whole design to remove all
$buf buffer cells and exit 'buffered-normalized mode' again.

    -pos
        Create (multi- and single-bit) $pos cells instead $buf and $_BUF_.

    -bits
        Create arrays of $_BUF_ cells instead of multi-bit $buf cells.

    -conn
        Create 'direct connections' instead of buffer cells.

    -nomode
        Do not automatically enter or leave 'buffered-normalized mode'.

The 'bufnorm' command can also be used to just switch in and out of
'buffered-normalized mode' and run the low-level re-normalizer.

    -update
        Enter 'buffered-normalized mode' and (re-)normalize.

    -reset
        Leave 'buffered-normalized mode' without changing the netlist.


WARNING: THE 'bufnorm' COMMAND IS EXPERIMENTAL.
```

10.23 bugpoint - minimize testcases

yosys> help **bugpoint**

```
    bugpoint [options] [-script <filename> | -command "<command>"]

This command minimizes the current design that is known to crash Yosys with the
given script into a smaller testcase. It does this by removing an arbitrary part
of the design and recursively invokes a new Yosys process with this modified
design and the same script, repeating these steps while it can find a smaller
design that still causes a crash. Once this command finishes, it replaces the
current design with the smallest testcase it was able to produce.
In order to save the reduced testcase you must write this out to a file with
another command after `bugpoint` like `write_rtlil` or `write_verilog`.

    -script <filename> | -command "<command>"
        use this script file or command to crash Yosys. required.

    -yosys <filename>
        use this Yosys binary. if not specified, `yosys` is used.

    -grep "<string>"
        only consider crashes that place this string in the log file.

    -fast
        run `proc_clean; clean -purge` after each minimization step. converges
        faster, but produces larger testcases, and may fail to produce any
        testcase at all if the crash is related to dangling wires.

    -clean
        run `proc_clean; clean -purge` before checking testcase and after
        finishing. produces smaller and more useful testcases, but may fail to
        produce any testcase at all if the crash is related to dangling wires.

It is possible to constrain which parts of the design will be considered for
removal. Unless one or more of the following options are specified, all parts
will be considered.

    -modules
        try to remove modules. modules with a (* bugpoint_keep *) attribute
        will be skipped.

    -ports
        try to remove module ports. ports with a (* bugpoint_keep *) attribute
        will be skipped (useful for clocks, resets, etc.)

    -cells
        try to remove cells. cells with a (* bugpoint_keep *) attribute will
        be skipped.

    -connections
        try to reconnect ports to 'x.
```

(continues on next page)

(continued from previous page)

```
    -processes
        try to remove processes. processes with a (* bugpoint_keep *) attribute
        will be skipped.

    -assigns
        try to remove process assigns from cases.

    -updates
        try to remove process updates from syncs.

    -runner "<prefix>"
        child process wrapping command, e.g., "timeout 30", or valgrind.
```

10.24 bwmuxmap - replace $bwmux cells with equivalent logic

yosys> help **bwmuxmap**

```
    bwmxumap [options] [selection]

This pass replaces $bwmux cells with equivalent logic
```

10.25 cd - a shortcut for 'select -module <name>'

yosys> help **cd**

```
    cd <modname>

This is just a shortcut for 'select -module <modname>'.


    cd <cellname>

When no module with the specified name is found, but there is a cell
with the specified name in the current module, then this is equivalent
to 'cd <celltype>'.


    cd ..

Remove trailing substrings that start with '.' in current module name until
the name of a module in the current design is generated, then switch to that
module. Otherwise clear the current selection.


    cd

This is just a shortcut for 'select -clear'.
```

10.26 cellmatch - match cells to their targets in cell library

yosys> help **cellmatch**

```
    cellmatch -lib <design> [module selection]

This pass identifies functionally equivalent counterparts between each of the
selected modules and a module from the secondary design <design>. For every such
correspondence found, a techmap rule is generated for mapping instances of the
former to instances of the latter. This techmap rule is saved in yet another
design called '$cellmatch', which is created if non-existent.

This pass restricts itself to combinational modules. Modules are functionally
equivalent as long as their truth tables are identical upto a permutation of
inputs and outputs. The supported number of inputs is limited to 6.

    cellmatch -derive_luts [module selection]

For every port in each selected module, characterize its combinational
function with a 'lut' attribute if possible.
```

10.27 check - check for obvious problems in the design

yosys> help **check**

```
    check [options] [selection]

This pass identifies the following problems in the current design:

  - combinatorial loops
  - two or more conflicting drivers for one wire
  - used wires that do not have a driver

Options:

    -noinit
        also check for wires which have the 'init' attribute set

    -initdrv
        also check for wires that have the 'init' attribute set and are not
        driven by an FF cell type

    -mapped
        also check for internal cells that have not been mapped to cells of the
        target architecture

    -allow-tbuf
        modify the -mapped behavior to still allow $_TBUF_ cells

    -assert
        produce a runtime error if any problems are found in the current design
```

(continues on next page)

(continued from previous page)

```
    -force-detailed-loop-check
        for the detection of combinatorial loops, use a detailed connectivity
        model for all internal cells for which it is available. This disables
        falling back to a simpler overapproximating model for those cells for
        which the detailed model is expected costly.
```

10.28 chformal - change formal constraints of the design

yosys> help **chformal**

```
    chformal [types] [mode] [options] [selection]

Make changes to the formal constraints of the design. The [types] options
the type of constraint to operate on. If none of the following options are
given, the command will operate on all constraint types:

    -assert       $assert cells, representing assert(...) constraints
    -assume       $assume cells, representing assume(...) constraints
    -live         $live cells, representing assert(s_eventually ...)
    -fair         $fair cells, representing assume(s_eventually ...)
    -cover        $cover cells, representing cover() statements

    Additionally chformal will operate on $check cells corresponding to the
    selected constraint types.

Exactly one of the following modes must be specified:

    -remove
        remove the cells and thus constraints from the design

    -early
        bypass FFs that only delay the activation of a constraint. When inputs
        of the bypassed FFs do not remain stable between clock edges, this may
        result in unexpected behavior.

    -delay <N>
        delay activation of the constraint by <N> clock cycles

    -skip <N>
        ignore activation of the constraint in the first <N> clock cycles

    -coverenable
        add cover statements for the enable signals of the constraints

    -assert2assume
    -assume2assert
    -live2fair
    -fair2live
        change the roles of cells as indicated. these options can be combined

    -lower
```

(continues on next page)

(continued from previous page)

```
        convert each $check cell into an $assert, $assume, $live, $fair or
        $cover cell. If the $check cell contains a message, also produce a
        $print cell.
```

10.29 chparam - re-evaluate modules with new parameters

yosys> help **chparam**

```
    chparam [ -set name value ]... [selection]

Re-evaluate the selected modules with new parameters. String values must be
passed in double quotes (").


    chparam -list [selection]

List the available parameters of the selected modules.
```

10.30 chtype - change type of cells in the design

yosys> help **chtype**

```
    chtype [options] [selection]

Change the types of cells in the design.

    -set <type>
        set the cell type to the given type

    -map <old_type> <new_type>
        change cells types that match <old_type> to <new_type>
```

10.31 clean - remove unused cells and wires

yosys> help **clean**

```
    clean [options] [selection]

This is identical to 'opt_clean', but less verbose.

When commands are separated using the ';;' token, this command will be executed
between the commands.

When commands are separated using the ';;;' token, this command will be executed
in -purge mode between the commands.
```

10.32 clean_zerowidth - clean zero-width connections from the design

yosys> help **clean_zerowidth**

```
    clean_zerowidth [selection]

Fixes the selected cells and processes to contain no zero-width connections.
Depending on the cell type, this may be implemented by removing the connection,
widening it to 1-bit, or removing the cell altogether.
```

10.33 clk2fflogic - convert clocked FFs to generic $ff cells

yosys> help **clk2fflogic**

```
    clk2fflogic [options] [selection]

This command replaces clocked flip-flops with generic $ff cells that use the
implicit global clock. This is useful for formal verification of designs with
multiple clocks.

This pass assumes negative hold time for the async FF inputs. For example when
a reset deasserts with the clock edge, then the FF output will still drive the
reset value in the next cycle regardless of the data-in value at the time of
the clock edge.

    -nolower
        Do not automatically run 'chformal -lower' to lower $check cells.

    -nopeepopt
        Do not automatically run 'peepopt -formalclk' to rewrite clock patterns
        to more formal friendly forms.
```

10.34 clkbufmap - insert clock buffers on clock networks

yosys> help **clkbufmap**

```
    clkbufmap [options] [selection]

Inserts clock buffers between nets connected to clock inputs and their drivers.

In the absence of any selection, all wires without the 'clkbuf_inhibit'
attribute will be considered for clock buffer insertion.
Alternatively, to consider all wires without the 'buffer_type' attribute set to
'none' or 'bufr' one would specify:
  'w:* a:buffer_type=none a:buffer_type=bufr %u %d'
as the selection.

    -buf <celltype> <portname_out>:<portname_in>
        Specifies the cell type to use for the clock buffers
        and its port names.  The first port will be connected to
```

(continues on next page)

(continued from previous page)

```
        the clock network sinks, and the second will be connected
        to the actual clock source.

    -inpad <celltype> <portname_out>:<portname_in>
        If specified, a PAD cell of the given type is inserted on
        clock nets that are also top module's inputs (in addition
        to the clock buffer, if any).

At least one of -buf or -inpad should be specified.
```

10.35 clockgate - extract clock gating out of flip flops

yosys> help **clockgate**

```
    clockgate [options] [selection]

This pass transforms each set of FFs sharing the same clock and
enable signal into a clock-gating cell and a set of enable-less FFs.
Primarily a power-saving transformation on ASIC designs.

    -pos <celltype> <ce>:<clk>:<gclk>
        If specified, rising-edge FFs will have CE inputs
        removed and a gated clock will be created by the
        user-specified <celltype> ICG (integrated clock gating)
        cell with ports named <ce>, <clk>, <gclk>.
        The ICG's clock enable pin must be active high.
    -neg <celltype> <ce>:<clk>:<gclk>
        If specified, falling-edge FFs will have CE inputs
        removed and a gated clock will be created by the
        user-specified <celltype> ICG (integrated clock gating)
        cell with ports named <ce>, <clk>, <gclk>.
        The ICG's clock enable pin must be active high.
    -liberty <filename>
        If specified, ICGs will be selected from the liberty files
        if available. Priority is given to cells with fewer tie_lo
        inputs and smaller size. This removes the need to manually
        specify -pos or -neg and -tie_lo.
    -dont_use <celltype>
        Cells <celltype> won't be considered when searching for ICGs
        in the liberty file specified by -liberty.
    -tie_lo <port_name>
        Port <port_name> of the ICG will be tied to zero.
        Intended for DFT scan-enable pins.
    -min_net_size <n>
        Only transform sets of at least <n> eligible FFs.
```

10.36 connect - create or remove connections

yosys> help **connect**

```
    connect [-nomap] [-nounset] -set <lhs-expr> <rhs-expr> [selection]

Create a connection. This is equivalent to adding the statement 'assign
<lhs-expr> = <rhs-expr>;' to the Verilog input. Per default, all existing
drivers for <lhs-expr> are unconnected. This can be overwritten by using
the -nounset option.


    connect [-nomap] -unset <expr> [selection]

Unconnect all existing drivers for the specified expression.


    connect [-nomap] [-assert] -port <cell> <port> <expr> [selection]

Connect the specified cell port to the specified cell port.


Per default signal alias names are resolved and all signal names are mapped
the the signal name of the primary driver. Using the -nomap option deactivates
this behavior.

The connect command operates in one module only. Either only one module must
be selected or an active module must be set using the 'cd' command.

The -assert option verifies that the connection already exists, instead of
making it.

This command does not operate on module with processes.
```

10.37 connect_rpc - connect to RPC frontend

yosys> help **connect_rpc**

```
    connect_rpc -exec <command> [args...]
    connect_rpc -path <path>

Load modules using an out-of-process frontend.

    -exec <command> [args...]
        run <command> with arguments [args...]. send requests on stdin, read
        responses from stdout.

    -path <path>
        connect to Unix domain socket at <path>. (Unix)
        connect to bidirectional byte-type named pipe at <path>. (Windows)

A simple JSON-based, newline-delimited protocol is used for communicating with
```

(continues on next page)

(continued from previous page)

```
the frontend. Yosys requests data from the frontend by sending exactly 1 line
of JSON. Frontend responds with data or error message by replying with exactly
1 line of JSON as well.

    -> {"method": "modules"}
    <- {"modules": ["<module-name>", ...]}
    <- {"error": "<error-message>"}
        request for the list of modules that can be derived by this frontend.
        the 'hierarchy' command will call back into this frontend if a cell
        with type <module-name> is instantiated in the design.

    -> {"method": "derive", "module": "<module-name">, "parameters": {
        "<param-name>": {"type": "[unsigned|signed|string|real]",
                         "value": "<param-value>"}, ...}}
    <- {"frontend": "[rtlil|verilog|...]","source": "<source>"}}
    <- {"error": "<error-message>"}
        request for the module <module-name> to be derived for a specific set of
        parameters. <param-name> starts with \ for named parameters, and with $
        for unnamed parameters, which are numbered starting at 1.<param-value>
        for integer parameters is always specified as a binary string of
        unlimited precision. the <source> returned by the frontend is
        hygienically parsedby a built-in Yosys <frontend>, allowing the RPC
        frontend to return anyconvenient representation of the module. the
        derived module is cached,so the response should be the same whenever the
        same set of parameters is provided.
```

10.38 connwrappers - match width of input-output port pairs

yosys> help **connwrappers**

```
    connwrappers [options] [selection]

Wrappers are used in coarse-grain synthesis to wrap cells with smaller ports
in wrapper cells with a (larger) constant port size. I.e. the upper bits
of the wrapper output are signed/unsigned bit extended. This command uses this
knowledge to rewire the inputs of the driven cells to match the output of
the driving cell.

    -signed <cell_type> <port_name> <width_param>
    -unsigned <cell_type> <port_name> <width_param>
        consider the specified signed/unsigned wrapper output

    -port <cell_type> <port_name> <width_param> <sign_param>
        use the specified parameter to decide if signed or unsigned

The options -signed, -unsigned, and -port can be specified multiple times.
```

10.39 coolrunner2_fixup - insert necessary buffer cells for CoolRunner-II architecture

yosys> help **coolrunner2_fixup**

```
    coolrunner2_fixup [options] [selection]

Insert necessary buffer cells for CoolRunner-II architecture.
```

10.40 coolrunner2_sop - break $sop cells into ANDTERM/ORTERM cells

yosys> help **coolrunner2_sop**

```
    coolrunner2_sop [options] [selection]

Break $sop cells into ANDTERM/ORTERM cells.
```

10.41 copy - copy modules in the design

yosys> help **copy**

```
    copy old_name new_name

Copy the specified module. Note that selection patterns are not supported
by this command.
```

10.42 cover - print code coverage counters

yosys> help **cover**

```
    cover [options] [pattern]

Print the code coverage counters collected using the cover() macro in the Yosys
C++ code. This is useful to figure out what parts of Yosys are utilized by a
test bench.

    -q
        Do not print output to the normal destination (console and/or log file)

    -o file
        Write output to this file, truncate if exists.

    -a file
        Write output to this file, append if exists.

    -d dir
        Write output to a newly created file in the specified directory.
```

(continues on next page)

(continued from previous page)

```
When one or more pattern (shell wildcards) are specified, then only counters
matching at least one pattern are printed.


It is also possible to instruct Yosys to print the coverage counters on program
exit to a file using environment variables:

    YOSYS_COVER_DIR="{dir-name}" yosys {args}

        This will create a file (with an auto-generated name) in this
        directory and write the coverage counters to it.

    YOSYS_COVER_FILE="{file-name}" yosys {args}

        This will append the coverage counters to the specified file.


Hint: Use the following AWK command to consolidate Yosys coverage files:

    gawk '{ p[$3] = $1; c[$3] += $2; } END { for (i in p)
      printf "%-60s %10d %s\n", p[i], c[i], i; }' {files} | sort -k3


Coverage counters are only available in Yosys for Linux.
```

10.43 cutpoint - adds formal cut points to the design

yosys> help **cutpoint**

```
    cutpoint [options] [selection]

This command adds formal cut points to the design.

    -undef
        set cutpoint nets to undef (x). the default behavior is to create
        an $anyseq cell and drive the cutpoint net from that
```

10.44 debug - run command with debug log messages enabled

yosys> help **debug**

```
    debug cmd

Execute the specified command with debug log messages enabled
```

10.45 delete - delete objects in the design

yosys> help **delete**

```
    delete [selection]

Deletes the selected objects. This will also remove entire modules, if the
whole module is selected.


    delete {-input|-output|-port} [selection]

Does not delete any object but removes the input and/or output flag on the
selected wires, thus 'deleting' module ports.
```

10.46 deminout - demote inout ports to input or output

yosys> help **deminout**

```
    deminout [options] [selection]

"Demote" inout ports to input or output ports, if possible.
```

10.47 demuxmap - transform $demux cells to $eq + $mux cells

yosys> help **demuxmap**

```
    demuxmap [selection]

This pass transforms $demux cells to a bunch of equality comparisons.
```

10.48 design - save, restore and reset current design

yosys> help **design**

```
    design -reset

Clear the current design.


    design -save <name>

Save the current design under the given name.


    design -stash <name>

Save the current design under the given name and then clear the current design.
```

(continues on next page)

(continued from previous page)

```
    design -push

Push the current design to the stack and then clear the current design.


    design -push-copy

Push the current design to the stack without clearing the current design.


    design -pop

Reset the current design and pop the last design from the stack.


    design -load <name>

Reset the current design and load the design previously saved under the given
name.


    design -copy-from <name> [-as <new_mod_name>] <selection>

Copy modules from the specified design into the current one. The selection is
evaluated in the other design.


    design -copy-to <name> [-as <new_mod_name>] [selection]

Copy modules from the current design into the specified one.


    design -import <name> [-as <new_top_name>] [selection]

Import the specified design into the current design. The source design must
either have a selected top module or the selection must contain exactly one
module that is then used as top module for this command.


    design -reset-vlog

The Verilog front-end remembers defined macros and top-level declarations
between calls to 'read_verilog'. This command resets this memory.

    design -delete <name>

Delete the design previously saved under the given name.
```

10.49 dffinit - set INIT param on FF cells

yosys> help **dffinit**

```
    dffinit [options] [selection]

This pass sets an FF cell parameter to the the initial value of the net it
drives. (This is primarily used in FPGA flows.)

    -ff <cell_name> <output_port> <init_param>
        operate on the specified cell type. this option can be used
        multiple times.

    -highlow
        use the string values "high" and "low" to represent a single-bit
        initial value of 1 or 0. (multi-bit values are not supported in this
        mode.)

    -strinit <string for high> <string for low>
        use string values in the command line to represent a single-bit
        initial value of 1 or 0. (multi-bit values are not supported in this
        mode.)

    -noreinit
        fail if the FF cell has already a defined initial value set in other
        passes and the initial value of the net it drives is not equal to
        the already defined initial value.
```

10.50 dfflegalize - convert FFs to types supported by the target

yosys> help **dfflegalize**

```
    dfflegalize [options] [selection]

Converts FFs to types supported by the target.

    -cell <cell_type_pattern> <init_values>
        specifies a supported group of FF cells.  <cell_type_pattern>
        is a yosys internal fine cell name, where ? characters can be
        as a wildcard matching any character.  <init_values> specifies
        which initialization values these FF cells can support, and can
        be one of:

        - x (no init value supported)
        - 0
        - 1
        - r (init value has to match reset value, only for some FF types)
        - 01 (both 0 and 1 supported).

    -mince <num>
        specifies a minimum number of FFs that should be using any given
        clock enable signal.  If a clock enable signal doesn't meet this
```

(continues on next page)

(continued from previous page)

```
        threshold, it is unmapped into soft logic.

    -minsrst <num>
        specifies a minimum number of FFs that should be using any given
        sync set/reset signal.  If a sync set/reset signal doesn't meet this
        threshold, it is unmapped into soft logic.

The following cells are supported by this pass (ie. will be ingested,
and can be specified as allowed targets):

- $_DFF_[NP]_
- $_DFFE_[NP][NP]_
- $_DFF_[NP][NP][01]_
- $_DFFE_[NP][NP][01][NP]_
- $_ALDFF_[NP][NP]_
- $_ALDFFE_[NP][NP][NP]_
- $_DFFSR_[NP][NP][NP]_
- $_DFFSRE_[NP][NP][NP][NP]_
- $_SDFF_[NP][NP][01]_
- $_SDFFE_[NP][NP][01][NP]_
- $_SDFFCE_[NP][NP][01][NP]_
- $_SR_[NP][NP]_
- $_DLATCH_[NP]_
- $_DLATCH_[NP][NP][01]_
- $_DLATCHSR_[NP][NP][NP]_

The following transformations are performed by this pass:

- upconversion from a less capable cell to a more capable cell, if the less
  capable cell is not supported (eg. dff -> dffe, or adff -> dffsr)
- unmapping FFs with clock enable (due to unsupported cell type or -mince)
- unmapping FFs with sync reset (due to unsupported cell type or -minsrst)
- adding inverters on the control pins (due to unsupported polarity)
- adding inverters on the D and Q pins and inverting the init/reset values
  (due to unsupported init or reset value)
- converting sr into adlatch (by tying D to 1 and using E as set input)
- emulating unsupported dffsr cell by adff + adff + sr + mux
- emulating unsupported dlatchsr cell by adlatch + adlatch + sr + mux
- emulating adff when the (reset, init) value combination is unsupported by
  dff + adff + dlatch + mux
- emulating adlatch when the (reset, init) value combination is unsupported by
- dlatch + adlatch + dlatch + mux
If the pass is unable to realize a given cell type (eg. adff when only plain dff
is available), an error is raised.
```

10.51 dfflibmap - technology mapping of flip-flops

yosys> help **dfflibmap**

```
    dfflibmap [-prepare] [-map-only] [-info] [-dont_use <cell_name>] -liberty <file>␣
↪[selection]
```

(continues on next page)

(continued from previous page)

```
Map internal flip-flop cells to the flip-flop cells in the technology
library specified in the given liberty files.

This pass may add inverters as needed. Therefore it is recommended to
first run this pass and then map the logic paths to the target technology.

When called with -prepare, this command will convert the internal FF cells
to the internal cell types that best match the cells found in the given
liberty file, but won't actually map them to the target cells.

When called with -map-only, this command will only map internal cell
types that are already of exactly the right type to match the target
cells, leaving remaining internal cells untouched.

When called with -info, this command will only print the target cell
list, along with their associated internal cell types, and the arguments
that would be passed to the dfflegalize pass.  The design will not be
changed.

When called with -dont_use, this command will not map to the specified cell
name as an alternative to setting the dont_use property in the Liberty file.
This argument can be called multiple times with different cell names. This
argument also supports simple glob patterns in the cell name.
```

10.52 dffunmap - unmap clock enable and synchronous reset from FFs

yosys> help **dffunmap**

```
    dffunmap [options] [selection]

This pass transforms FF types with clock enable and/or synchronous reset into
their base type (with neither clock enable nor sync reset) by emulating the
clock enable and synchronous reset with multiplexers on the cell input.

    -ce-only
        unmap only clock enables, leave synchronous resets alone.

    -srst-only
        unmap only synchronous resets, leave clock enables alone.
```

10.53 dft_tag - create tagging logic for data flow tracking

yosys> help **dft_tag**

```
    dft_tag [options] [selection]

This pass... TODO
```

(continues on next page)

(continued from previous page)

```
    -overwrite-only
        Only process $overwrite_tag and $original_tag cells.
    -tag-public
        For each public wire that may carry tagged data, create a new public
        wire (named <wirename>:<tagname>) that carries the tag bits. Note
        that without this, tagging logic will only be emitted as required
        for uses of $get_tag.
```

10.54 dump - print parts of the design in RTLIL format

yosys> help **dump**

```
    dump [options] [selection]

Write the selected parts of the design to the console or specified file in
RTLIL format.

    -m
        also dump the module headers, even if only parts of a single
        module is selected

    -n
        only dump the module headers if the entire module is selected

    -o <filename>
        write to the specified file.

    -a <filename>
        like -outfile but append instead of overwrite
```

10.55 echo - turning echoing back of commands on and off

yosys> help **echo**

```
    echo on

Print all commands to log before executing them.


    echo off

Do not print all commands to log before executing them. (default)
```

10.56 edgetypes - list all types of edges in selection

yosys> help **edgetypes**

```
    edgetypes [options] [selection]

This command lists all unique types of 'edges' found in the selection. An 'edge'
is a 4-tuple of source and sink cell type and port name.
```

10.57 efinix_fixcarry - Efinix: fix carry chain

yosys> help **efinix_fixcarry**

```
    efinix_fixcarry [options] [selection]

Add Efinix adders to fix carry chain if needed.
```

10.58 equiv_add - add a $equiv cell

yosys> help **equiv_add**

```
    equiv_add [-try] gold_sig gate_sig

This command adds an $equiv cell for the specified signals.


    equiv_add [-try] -cell gold_cell gate_cell

This command adds $equiv cells for the ports of the specified cells.
```

10.59 equiv_induct - proving $equiv cells using temporal induction

yosys> help **equiv_induct**

```
    equiv_induct [options] [selection]

Uses a version of temporal induction to prove $equiv cells.

Only selected $equiv cells are proven and only selected cells are used to
perform the proof.

    -undef
        enable modelling of undef states

    -seq <N>
        the max. number of time steps to be considered (default = 4)

This command is very effective in proving complex sequential circuits, when
the internal state of the circuit quickly propagates to $equiv cells.

However, this command uses a weak definition of 'equivalence': This command
proves that the two circuits will not diverge after they produce equal
outputs (observable points via $equiv) for at least <N> cycles (the <N>
```

(continues on next page)

(continued from previous page)

```
specified via -seq).

Combined with simulation this is very powerful because simulation can give
you confidence that the circuits start out synced for at least <N> cycles
after reset.
```

10.60 equiv_make - prepare a circuit for equivalence checking

yosys> help **equiv_make**

```
    equiv_make [options] gold_module gate_module equiv_module

This creates a module annotated with $equiv cells from two presumably
equivalent modules. Use commands such as 'equiv_simple' and 'equiv_status'
to work with the created equivalent checking module.

    -inames
        Also match cells and wires with $... names.

    -blacklist <file>
        Do not match cells or signals that match the names in the file.

    -encfile <file>
        Match FSM encodings using the description from the file.
        See 'help fsm_recode' for details.

    -make_assert
        Check equivalence with $assert cells instead of $equiv.
        $eqx (===) is used to compare signals.
Note: The circuit created by this command is not a miter (with something like
a trigger output), but instead uses $equiv cells to encode the equivalence
checking problem. Use 'miter -equiv' if you want to create a miter circuit.
```

10.61 equiv_mark - mark equivalence checking regions

yosys> help **equiv_mark**

```
    equiv_mark [options] [selection]

This command marks the regions in an equivalence checking module. Region 0 is
the proven part of the circuit. Regions with higher numbers are connected
unproven subcricuits. The integer attribute 'equiv_region' is set on all
wires and cells.
```

10.62 equiv_miter - extract miter from equiv circuit

yosys> help **equiv_miter**

```
    equiv_miter [options] miter_module [selection]

This creates a miter module for further analysis of the selected $equiv cells.

    -trigger
        Create a trigger output

    -cmp
        Create cmp_* outputs for individual unproven $equiv cells

    -assert
        Create a $assert cell for each unproven $equiv cell

    -undef
        Create compare logic that handles undefs correctly
```

10.63 equiv_opt - prove equivalence for optimized circuit

yosys> help **equiv_opt**

```
    equiv_opt [options] [command]

This command uses temporal induction to check circuit equivalence before and
after an optimization pass.

    -run <from_label>:<to_label>
        only run the commands between the labels (see below). an empty
        from label is synonymous to the start of the command list, and empty to
        label is synonymous to the end of the command list.

    -map <filename>
        expand the modules in this file before proving equivalence. this is
        useful for handling architecture-specific primitives.

    -blacklist <file>
        Do not match cells or signals that match the names in the file
        (passed to equiv_make).

    -assert
        produce an error if the circuits are not equivalent.

    -multiclock
        run clk2fflogic before equivalence checking.

    -async2sync
        run async2sync before equivalence checking.

    -undef
        enable modelling of undef states during equiv_induct.

    -nocheck
```

(continues on next page)

(continued from previous page)

```
        disable running check before and after the command under test.

The following commands are executed by this verification command:

    run_pass:
        hierarchy -auto-top
        design -save preopt
        check -assert    (unless -nocheck)
        [command]
        check -assert    (unless -nocheck)
        design -stash postopt

    prepare:
        design -copy-from preopt  -as gold A:top
        design -copy-from postopt -as gate A:top

    techmap:    (only with -map)
        techmap -wb -D EQUIV -autoproc -map <filename> ...

    prove:
        clk2fflogic    (only with -multiclock)
        async2sync     (only with -async2sync)
        equiv_make -blacklist <filename> ... gold gate equiv
        equiv_induct [-undef] equiv
        equiv_status [-assert] equiv

    restore:
        design -load preopt
```

10.64 equiv_purge - purge equivalence checking module

yosys> help **equiv_purge**

```
    equiv_purge [options] [selection]

This command removes the proven part of an equivalence checking module, leaving
only the unproven segments in the design. This will also remove and add module
ports as needed.
```

10.65 equiv_remove - remove $equiv cells

yosys> help **equiv_remove**

```
    equiv_remove [options] [selection]

This command removes the selected $equiv cells. If neither -gold nor -gate is
used then only proven cells are removed.

    -gold
```

(continues on next page)

(continued from previous page)

```
        keep gold circuit

    -gate
        keep gate circuit
```

10.66 equiv_simple - try proving simple $equiv instances

yosys> help **equiv_simple**

```
    equiv_simple [options] [selection]

This command tries to prove $equiv cells using a simple direct SAT approach.

    -v
        verbose output

    -undef
        enable modelling of undef states

    -short
        create shorter input cones that stop at shared nodes. This yields
        simpler SAT problems but sometimes fails to prove equivalence.

    -nogroup
        disabling grouping of $equiv cells by output wire

    -seq <N>
        the max. number of time steps to be considered (default = 1)
```

10.67 equiv_status - print status of equivalent checking module

yosys> help **equiv_status**

```
    equiv_status [options] [selection]

This command prints status information for all selected $equiv cells.

    -assert
        produce an error if any unproven $equiv cell is found
```

10.68 equiv_struct - structural equivalence checking

yosys> help **equiv_struct**

```
    equiv_struct [options] [selection]

This command adds additional $equiv cells based on the assumption that the
gold and gate circuit are structurally equivalent. Note that this can introduce
```

(continues on next page)

(continued from previous page)

```
bad $equiv cells in cases where the netlists are not structurally equivalent,
for example when analyzing circuits with cells with commutative inputs. This
command will also de-duplicate gates.

    -fwd
        by default this command performans forward sweeps until nothing can
        be merged by forwards sweeps, then backward sweeps until forward
        sweeps are effective again. with this option set only forward sweeps
        are performed.

    -fwonly <cell_type>
        add the specified cell type to the list of cell types that are only
        merged in forward sweeps and never in backward sweeps. $equiv is in
        this list automatically.

    -icells
        by default, the internal RTL and gate cell types are ignored. add
        this option to also process those cell types with this command.

    -maxiter <N>
        maximum number of iterations to run before aborting
```

10.69 eval - evaluate the circuit given an input

yosys> help **eval**

```
    eval [options] [selection]

This command evaluates the value of a signal given the value of all required
inputs.

    -set <signal> <value>
        set the specified signal to the specified value.

    -set-undef
        set all unspecified source signals to undef (x)

    -table <signal>
        create a truth table using the specified input signals

    -show <signal>
        show the value for the specified signal. if no -show option is passed
        then all output ports of the current module are used.
```

10.70 example_dt - drivertools example

yosys> help **example_dt**

```
TODO: add help message
```

10.71 exec - execute commands in the operating system shell

yosys> help **exec**

```
    exec [options] -- [command]

Execute a command in the operating system shell.  All supplied arguments are
concatenated and passed as a command to popen(3).  Whitespace is not guaranteed
to be preserved, even if quoted.  stdin and stderr are not connected, while
stdout is logged unless the "-q" option is specified.


    -q
        Suppress stdout and stderr from subprocess

    -expect-return <int>
        Generate an error if popen() does not return specified value.
        May only be specified once; the final specified value is controlling
        if specified multiple times.

    -expect-stdout <regex>
        Generate an error if the specified regex does not match any line
        in subprocess's stdout.  May be specified multiple times.

    -not-expect-stdout <regex>
        Generate an error if the specified regex matches any line
        in subprocess's stdout.  May be specified multiple times.


    Example: exec -q -expect-return 0 -- echo "bananapie" | grep "nana"
```

10.72 expose - convert internal signals to module ports

yosys> help **expose**

```
    expose [options] [selection]

This command exposes all selected internal signals of a module as additional
outputs.

    -dff
        only consider wires that are directly driven by register cell.

    -cut
        when exposing a wire, create an input/output pair and cut the internal
        signal path at that wire.

    -input
        when exposing a wire, create an input port and disconnect the internal
        driver.

    -shared
```

(continues on next page)

(continued from previous page)

```
        only expose those signals that are shared among the selected modules.
        this is useful for preparing modules for equivalence checking.

    -evert
        also turn connections to instances of other modules to additional
        inputs and outputs and remove the module instances.

    -evert-dff
        turn flip-flops to sets of inputs and outputs.

    -sep <separator>
        when creating new wire/port names, the original object name is suffixed
        with this separator (default: '.') and the port name or a type
        designator for the exposed signal.
```

10.73 extract - find subcircuits and replace them with cells

yosys> help **extract**

```
    extract -map <map_file> [options] [selection]
    extract -mine <out_file> [options] [selection]

This pass looks for subcircuits that are isomorphic to any of the modules
in the given map file and replaces them with instances of this modules. The
map file can be a Verilog source file (*.v) or an RTLIL source file (*.il).

    -map <map_file>
        use the modules in this file as reference. This option can be used
        multiple times.

    -map %<design-name>
        use the modules in this in-memory design as reference. This option can
        be used multiple times.

    -verbose
        print debug output while analyzing

    -constports
        also find instances with constant drivers. this may be much
        slower than the normal operation.

    -nodefaultswaps
        normally builtin port swapping rules for internal cells are used per
        default. This turns that off, so e.g. 'a^b' does not match 'b^a'
        when this option is used.

    -compat <needle_type> <haystack_type>
        Per default, the cells in the map file (needle) must have the
        type as the cells in the active design (haystack). This option
        can be used to register additional pairs of types that should
        match. This option can be used multiple times.
```

(continues on next page)

(continued from previous page)

```
    -swap <needle_type> <port1>,<port2>[,...]
        Register a set of swappable ports for a needle cell type.
        This option can be used multiple times.

    -perm <needle_type> <port1>,<port2>[,...] <portA>,<portB>[,...]
        Register a valid permutation of swappable ports for a needle
        cell type. This option can be used multiple times.

    -cell_attr <attribute_name>
        Attributes on cells with the given name must match.

    -wire_attr <attribute_name>
        Attributes on wires with the given name must match.

    -ignore_parameters
        Do not use parameters when matching cells.

    -ignore_param <cell_type> <parameter_name>
        Do not use this parameter when matching cells.

This pass does not operate on modules with unprocessed processes in it.
(I.e. the 'proc' pass should be used first to convert processes to netlists.)

This pass can also be used for mining for frequent subcircuits. In this mode
the following options are to be used instead of the -map option.

    -mine <out_file>
        mine for frequent subcircuits and write them to the given RTLIL file

    -mine_cells_span <min> <max>
        only mine for subcircuits with the specified number of cells
        default value: 3 5

    -mine_min_freq <num>
        only mine for subcircuits with at least the specified number of matches
        default value: 10

    -mine_limit_matches_per_module <num>
        when calculating the number of matches for a subcircuit, don't count
        more than the specified number of matches per module

    -mine_max_fanout <num>
        don't consider internal signals with more than <num> connections

The modules in the map file may have the attribute 'extract_order' set to an
integer value. Then this value is used to determine the order in which the pass
tries to map the modules to the design (ascending, default value is 0).

See 'help techmap' for a pass that does the opposite thing.
```

10.74 extract_counter - Extract GreenPak4 counter cells

yosys> help **extract_counter**

```
    extract_counter [options] [selection]

This pass converts non-resettable or async resettable counters to counter cells.
Use a target-specific 'techmap' map file to convert those cells to the actual
target cells.

    -maxwidth N
        Only extract counters up to N bits wide (default 64)

    -minwidth N
        Only extract counters at least N bits wide (default 2)

    -allow_arst yes|no
        Allow counters to have async reset (default yes)

    -dir up|down|both
        Look for up-counters, down-counters, or both (default down)

    -pout X,Y,...
        Only allow parallel output from the counter to the listed cell types
        (if not specified, parallel outputs are not restricted)
```

10.75 extract_fa - find and extract full/half adders

yosys> help **extract_fa**

```
    extract_fa [options] [selection]

This pass extracts full/half adders from a gate-level design.

    -fa, -ha
        Enable cell types (fa=full adder, ha=half adder)
        All types are enabled if none of this options is used

    -d <int>
        Set maximum depth for extracted logic cones (default=20)

    -b <int>
        Set maximum breadth for extracted logic cones (default=6)

    -v
        Verbose output
```

10.76 extract_reduce - converts gate chains into $reduce_* cells

yosys> help **extract_reduce**

```
    extract_reduce [options] [selection]

converts gate chains into $reduce_* cells

This command finds chains of $_AND_, $_OR_, and $_XOR_ cells and replaces them
with their corresponding $reduce_* cells. Because this command only operates on
these cell types, it is recommended to map the design to only these cell types
using the `abc -g` command. Note that, in some cases, it may be more effective
to map the design to only $_AND_ cells, run extract_reduce, map the remaining
parts of the design to AND/OR/XOR cells, and run extract_reduce a second time.

    -allow-off-chain
        Allows matching of cells that have loads outside the chain. These cells
        will be replicated and folded into the $reduce_* cell, but the original
        cell will remain, driving its original loads.
```

10.77 extractinv - extract explicit inverter cells for invertible cell pins

yosys> help **extractinv**

```
    extractinv [options] [selection]

Searches the design for all cells with invertible pins controlled by a cell
parameter (eg. IS_CLK_INVERTED on many Xilinx cells) and removes the parameter.
If the parameter was set to 1, inserts an explicit inverter cell in front of
the pin instead.  Normally used for output to ISE, which does not support the
inversion parameters.

To mark a cell port as invertible, use (* invertible_pin = "param_name" *)
on the wire in the blackbox module.  The parameter value should have
the same width as the port, and will be effectively XORed with it.

    -inv <celltype> <portname_out>:<portname_in>
        Specifies the cell type to use for the inverters and its port names.
        This option is required.
```

10.78 flatten - flatten design

yosys> help **flatten**

```
    flatten [options] [selection]

This pass flattens the design by replacing cells by their implementation. This
pass is very similar to the 'techmap' pass. The only difference is that this
pass is using the current design as mapping library.
```

(continues on next page)

(continued from previous page)

```
Cells and/or modules with the 'keep_hierarchy' attribute set will not be
flattened by this command.

    -wb
        Ignore the 'whitebox' attribute on cell implementations.

    -noscopeinfo
        Do not create '$scopeinfo' cells that preserve attributes of cells and
        modules that were removed during flattening. With this option, the
        'src' attribute of a given cell is merged into all objects replacing
        that cell, with multiple distinct 'src' locations separated by '|'.
        Without this option these 'src' locations can be found via the
        cell_src' and 'module_src' attribute of '$scopeinfo' cells.

    -scopename
        Create 'scopename' attributes for objects with a private name. This
        attribute records the 'hdlname' of the enclosing scope. For objects
        with a public name the enclosing scope can be found via their
        'hdlname' attribute.

    -separator <char>
        Use this separator char instead of '.' when concatenating design levels.
```

10.79 flowmap - pack LUTs with FlowMap

yosys> help **flowmap**

```
    flowmap [options] [selection]

This pass uses the FlowMap technology mapping algorithm to pack logic gates
into k-LUTs with optimal depth. It allows mapping any circuit elements that can
be evaluated with the `eval` pass, including cells with multiple output ports
and multi-bit input and output ports.

    -maxlut k
        perform technology mapping for a k-LUT architecture. if not specified,
        defaults to 3.

    -minlut n
        only produce n-input or larger LUTs. if not specified, defaults to 1.

    -cells <cell>[,<cell>,...]
        map specified cells. if not specified, maps $_NOT_, $_AND_, $_OR_,
        $_XOR_ and $_MUX_, which are the outputs of the `simplemap` pass.

    -relax
        perform depth relaxation and area minimization.

    -r-alpha n, -r-beta n, -r-gamma n
        parameters of depth relaxation heuristic potential function.
        if not specified, alpha=8, beta=2, gamma=1.
```

(continues on next page)

(continued from previous page)

```
    -optarea n
        optimize for area by trading off at most n logic levels for fewer LUTs.
        n may be zero, to optimize for area without increasing depth.
        implies -relax.

    -debug
        dump intermediate graphs.

    -debug-relax
        explain decisions performed during depth relaxation.
```

10.80 fmcombine - combine two instances of a cell into one

yosys> help **fmcombine**

```
    fmcombine [options] module_name gold_cell gate_cell

This pass takes two cells, which are instances of the same module, and replaces
them with one instance of a special 'combined' module, that effectively
contains two copies of the original module, plus some formal properties.

This is useful for formal test benches that check what differences in behavior
a slight difference in input causes in a module.

    -initeq
        Insert assumptions that initially all FFs in both circuits have the
        same initial values.

    -anyeq
        Do not duplicate $anyseq/$anyconst cells.

    -fwd
        Insert forward hint assumptions into the combined module.

    -bwd
        Insert backward hint assumptions into the combined module.
        (Backward hints are logically equivalend to fordward hits, but
        some solvers are faster with bwd hints, or even both -bwd and -fwd.)

    -nop
        Don't insert hint assumptions into the combined module.
        (This should not provide any speedup over the original design, but
        strangely sometimes it does.)

If none of -fwd, -bwd, and -nop is given, then -fwd is used as default.
```

10.81 fminit - set init values/sequences for formal

yosys> help **fminit**

```
    fminit [options] <selection>

This pass creates init constraints (for example for reset sequences) in a formal
model.

    -seq <signal> <sequence>
        Set sequence using comma-separated list of values, use 'z for
        unconstrained bits. The last value is used for the remainder of the
        trace.

    -set <signal> <value>
        Add constant value constraint

    -posedge <signal>
    -negedge <signal>
        Set clock for init sequences
```

10.82 formalff - prepare FFs for formal

yosys> help **formalff**

```
    formalff [options] [selection]

This pass transforms clocked flip-flops to prepare a design for formal
verification. If a design contains latches and/or multiple different clocks run
the async2sync or clk2fflogic passes before using this pass.

    -clk2ff
        Replace all clocked flip-flops with $ff cells that use the implicit
        global clock. This assumes, without checking, that the design uses a
        single global clock. If that is not the case, the clk2fflogic pass
        should be used instead.

    -ff2anyinit
        Replace uninitialized bits of $ff cells with $anyinit cells. An
        $anyinit cell behaves exactly like an $ff cell with an undefined
        initialization value. The difference is that $anyinit inhibits
        don't-care optimizations and is used to track solver-provided values
        in witness traces.

        If combined with -clk2ff this also affects newly created $ff cells.

    -anyinit2ff
        Replaces $anyinit cells with uninitialized $ff cells. This performs the
        reverse of -ff2anyinit and can be used, before running a backend pass
        (or similar) that is not yet aware of $anyinit cells.

        Note that after running -anyinit2ff, in general, performing don't-care
```

(continues on next page)

(continued from previous page)

```
        optimizations is not sound in a formal verification setting.

    -fine
        Emit fine-grained $_FF_ cells instead of coarse-grained $ff cells for
        -anyinit2ff. Cannot be combined with -clk2ff or -ff2anyinit.

    -setundef
        Find FFs with undefined initialization values for which changing the
        initialization does not change the observable behavior and initialize
        them. For -ff2anyinit, this reduces the number of generated $anyinit
        cells that drive wires with private names.

    -hierarchy
        Propagates the 'replaced_by_gclk' attribute set by clk2ff upwards
        through the design hierarchy towards the toplevel inputs. This option
        works on the whole design and ignores the selection.

    -assume
        Add assumptions that constrain wires with the 'replaced_by_gclk'
        attribute to the value they would have before an active clock edge.
```

10.83 freduce - perform functional reduction

yosys> help **freduce**

```
    freduce [options] [selection]

This pass performs functional reduction in the circuit. I.e. if two nodes are
equivalent, they are merged to one node and one of the redundant drivers is
disconnected. A subsequent call to 'clean' will remove the redundant drivers.

    -v, -vv
        enable verbose or very verbose output

    -inv
        enable explicit handling of inverted signals

    -stop <n>
        stop after <n> reduction operations. this is mostly used for
        debugging the freduce command itself.

    -dump <prefix>
        dump the design to <prefix>_<module>_<num>.il after each reduction
        operation. this is mostly used for debugging the freduce command.

This pass is undef-aware, i.e. it considers don't-care values for detecting
equivalent nodes.

All selected wires are considered for rewiring. The selected cells cover the
circuit that is analyzed.
```

10.84 fsm - extract and optimize finite state machines

yosys> help **fsm**

```
    fsm [options] [selection]

This pass calls all the other fsm_* passes in a useful order. This performs
FSM extraction and optimization. It also calls opt_clean as needed:

    fsm_detect          unless got option -nodetect
    fsm_extract

    fsm_opt
    opt_clean
    fsm_opt

    fsm_expand          if got option -expand
    opt_clean           if got option -expand
    fsm_opt             if got option -expand

    fsm_recode          unless got option -norecode

    fsm_info

    fsm_export          if got option -export
    fsm_map             unless got option -nomap

Options:

    -expand, -norecode, -export, -nomap
        enable or disable passes as indicated above

    -fullexpand
        call expand with -full option

    -encoding type
    -fm_set_fsm_file file
    -encfile file
        passed through to fsm_recode pass

This pass uses a subset of FF types to detect FSMs. Run 'opt -nosdff -nodffe'
before this pass to prepare the design.
```

10.85 fsm_detect - finding FSMs in design

yosys> help **fsm_detect**

```
    fsm_detect [options] [selection]

This pass detects finite state machines by identifying the state signal.
The state signal is then marked by setting the attribute 'fsm_encoding'
on the state signal to "auto".
```

(continues on next page)

(continued from previous page)

```
    -ignore-self-reset
        Mark FSMs even if they are self-resetting

Existing 'fsm_encoding' attributes are not changed by this pass.

Signals can be protected from being detected by this pass by setting the
'fsm_encoding' attribute to "none".

This pass uses a subset of FF types to detect FSMs. Run 'opt -nosdff -nodffe'
before this pass to prepare the design for fsm_detect.
```

10.86 fsm_expand - expand FSM cells by merging logic into it

yosys> help **fsm_expand**

```
    fsm_expand [-full] [selection]

The fsm_extract pass is conservative about the cells that belong to a finite
state machine. This pass can be used to merge additional auxiliary gates into
the finite state machine.

By default, fsm_expand is still a bit conservative regarding merging larger
word-wide cells. Call with -full to consider all cells for merging.
```

10.87 fsm_export - exporting FSMs to KISS2 files

yosys> help **fsm_export**

```
    fsm_export [-noauto] [-o filename] [-origenc] [selection]

This pass creates a KISS2 file for every selected FSM. For FSMs with the
'fsm_export' attribute set, the attribute value is used as filename, otherwise
the module and cell name is used as filename. If the parameter '-o' is given,
the first exported FSM is written to the specified filename. This overwrites
the setting as specified with the 'fsm_export' attribute. All other FSMs are
exported to the default name as mentioned above.

    -noauto
        only export FSMs that have the 'fsm_export' attribute set

    -o filename
        filename of the first exported FSM

    -origenc
        use binary state encoding as state names instead of s0, s1, ...
```

10.88 fsm_extract - extracting FSMs in design

yosys> help **fsm_extract**

```
    fsm_extract [selection]

This pass operates on all signals marked as FSM state signals using the
'fsm_encoding' attribute. It consumes the logic that creates the state signal
and uses the state signal to generate control signal and replaces it with an
FSM cell.

The generated FSM cell still generates the original state signal with its
original encoding. The 'fsm_opt' pass can be used in combination with the
'opt_clean' pass to eliminate this signal.
```

10.89 fsm_info - print information on finite state machines

yosys> help **fsm_info**

```
    fsm_info [selection]

This pass dumps all internal information on FSM cells. It can be useful for
analyzing the synthesis process and is called automatically by the 'fsm'
pass so that this information is included in the synthesis log file.
```

10.90 fsm_map - mapping FSMs to basic logic

yosys> help **fsm_map**

```
    fsm_map [selection]

This pass translates FSM cells to flip-flops and logic.
```

10.91 fsm_opt - optimize finite state machines

yosys> help **fsm_opt**

```
    fsm_opt [selection]

This pass optimizes FSM cells. It detects which output signals are actually
not used and removes them from the FSM. This pass is usually used in
combination with the 'opt_clean' pass (see also 'help fsm').
```

10.92 fsm_recode - recoding finite state machines

yosys> help **fsm_recode**

```
    fsm_recode [options] [selection]

This pass reassign the state encodings for FSM cells. At the moment only
one-hot encoding and binary encoding is supported.
    -encoding <type>
        specify the encoding scheme used for FSMs without the
        'fsm_encoding' attribute or with the attribute set to `auto'.

    -fm_set_fsm_file <file>
        generate a file containing the mapping from old to new FSM encoding
        in form of Synopsys Formality set_fsm_* commands.

    -encfile <file>
        write the mappings from old to new FSM encoding to a file in the
        following format:

            .fsm <module_name> <state_signal>
            .map <old_bitpattern> <new_bitpattern>
```

10.93 fst2tb - generate testbench out of fst file

yosys> help **fst2tb**

```
    fst2tb [options] [top-level]

This command generates testbench for the circuit using the given top-level
module and simulus signal from FST file

    -tb <name>
        generated testbench name.
        files <name>.v and <name>.txt are created as result.

    -r <filename>
        read simulation FST file

    -clock <portname>
        name of top-level clock input

    -clockn <portname>
        name of top-level clock input (inverse polarity)

    -scope <name>
        scope of simulation top model

    -start <time>
        start co-simulation in arbitary time (default 0)

    -stop <time>
        stop co-simulation in arbitary time (default END)

    -n <integer>
        number of clock cycles to simulate (default: 20)
```

10.94 future - resolve future sampled value functions

yosys> help **future**

```
future [options] [selection]
```

10.95 gatemate_foldinv - fold inverters into Gatemate LUT trees

yosys> help **gatemate_foldinv**

```
    gatemate_foldinv [selection]


This pass searches for $__CC_NOT cells and folds them into CC_LUT2, CC_L2T4
and CC_L2T5 cells as created by LUT tree mapping.
```

10.96 glift - create GLIFT models and optimization problems

yosys> help **glift**

```
    glift <command> [options] [selection]

Augments the current or specified module with gate-level information flow
tracking (GLIFT) logic using the "constructive mapping" approach. Also can set
up QBF-SAT optimization problems in order to optimize GLIFT models or trade off
precision and complexity.


Commands:

  -create-precise-model
    Replaces the current or specified module with one that has corresponding
    "taint" inputs, outputs, and internal nets along with precise taint
    tracking logic. For example, precise taint tracking logic for an AND gate
    is:

      y_t = a & b_t | b & a_t | a_t & b_t


  -create-imprecise-model
    Replaces the current or specified module with one that has corresponding
    "taint" inputs, outputs, and internal nets along with imprecise "All OR"
    taint tracking logic:

      y_t = a_t | b_t


  -create-instrumented-model
    Replaces the current or specified module with one that has corresponding
    "taint" inputs, outputs, and internal nets along with 4 varying-precision
```

(continues on next page)

(continued from previous page)

```
    versions of taint tracking logic. Which version of taint tracking logic is
    used for a given gate is determined by a MUX selected by an $anyconst cell.
     By default, unless the `-no-cost-model` option is provided, an additional
    wire named `__glift_weight` with the `keep` and `minimize` attributes is
    added to the module along with pmuxes and adders to calculate a rough
    estimate of the number of logic gates in the GLIFT model given an assignment
    for the $anyconst cells. The four versions of taint tracking logic for an
    AND gate are:
      y_t = a & b_t | b & a_t | a_t & b_t       (like `-create-precise-model`)
      y_t = a_t | a & b_t
      y_t = b_t | b & a_t
      y_t = a_t | b_t                           (like `-create-imprecise-model`)


Options:

  -taint-constants
    Constant values in the design are labeled as tainted.
    (default: label constants as un-tainted)

  -keep-outputs
    Do not remove module outputs. Taint tracking outputs will appear in the
    module ports alongside the orignal outputs.
    (default: original module outputs are removed)

  -simple-cost-model
    Do not model logic area. Instead model the number of non-zero assignments to
    $anyconsts. Taint tracking logic versions vary in their size, but all
    reduced-precision versions are significantly smaller than the fully-precise
    version. A non-zero $anyconst assignment means that reduced-precision taint
    tracking logic was chosen for some gate. Only applicable in combination with
    `-create-instrumented-model`. (default: use a complex model and give that
     wire the "keep" and "minimize" attributes)

  -no-cost-model
    Do not model taint tracking logic area and do not create a `__glift_weight`
    wire. Only applicable in combination with `-create-instrumented-model`.
    (default: model area and give that wire the "keep" and "minimize"
    attributes)

  -instrument-more
    Allow choice from more versions of (even simpler) taint tracking logic. A
    total of 8 versions of taint tracking logic will be added per gate,
    including the 4 versions from `-create-instrumented-model` and these
    additional versions:

      y_t = a_t
      y_t = b_t
      y_t = 1
      y_t = 0

    Only applicable in combination with `-create-instrumented-model`.
```

(continues on next page)

(continued from previous page)

```
    (default: do not add more versions of taint tracking logic.
```

10.97 greenpak4_dffinv - merge greenpak4 inverters and DFF/latches

yosys> help **greenpak4_dffinv**

```
    greenpak4_dffinv [options] [selection]

Merge GP_INV cells with GP_DFF* and GP_DLATCH* cells.
```

10.98 help - display help messages

yosys> help **help**

```
help  ..............  list all commands
help <command>  ......  print help message for given command
help -all  ...........  print complete command reference

help -cells ..........  list all cell types
help <celltype>  .....  print help message for given cell type
help <celltype>+  ....  print verilog code for given cell type
```

10.99 hierarchy - check, expand and clean up design hierarchy

yosys> help **hierarchy**

```
    hierarchy [-check] [-top <module>]
    hierarchy -generate <cell-types> <port-decls>

In parametric designs, a module might exists in several variations with
different parameter values. This pass looks at all modules in the current
design and re-runs the language frontends for the parametric modules as
needed. It also resolves assignments to wired logic data types (wand/wor),
resolves positional module parameters, unrolls array instances, and more.

    -check
        also check the design hierarchy. this generates an error when
        an unknown module is used as cell type.

    -simcheck
        like -check, but also throw an error if blackbox modules are
        instantiated, and throw an error if the design has no top module.

    -smtcheck
        like -simcheck, but allow smtlib2_module modules.

    -purge_lib
        by default the hierarchy command will not remove library (blackbox)
```

(continues on next page)

(continued from previous page)

```
        modules. use this option to also remove unused blackbox modules.

    -libdir <directory>
        search for files named <module_name>.v in the specified directory
        for unknown modules and automatically run read_verilog for each
        unknown module.

    -keep_positionals
        per default this pass also converts positional arguments in cells
        to arguments using port names. This option disables this behavior.

    -keep_portwidths
        per default this pass adjusts the port width on cells that are
        module instances when the width does not match the module port. This
        option disables this behavior.

    -nodefaults
        do not resolve input port default values

    -nokeep_prints
        per default this pass sets the "keep" attribute on all modules
        that directly or indirectly display text on the terminal.
        This option disables this behavior.

    -nokeep_asserts
        per default this pass sets the "keep" attribute on all modules
        that directly or indirectly contain one or more formal properties.
        This option disables this behavior.

    -top <module>
        use the specified top module to build the design hierarchy. Modules
        outside this tree (unused modules) are removed.

        when the -top option is used, the 'top' attribute will be set on the
        specified top module. otherwise a module with the 'top' attribute set
        will implicitly be used as top module, if such a module exists.

    -auto-top
        automatically determine the top of the design hierarchy and mark it.

    -chparam name value
       elaborate the top module using this parameter value. Modules on which
       this parameter does not exist may cause a warning message to be output.
       This option can be specified multiple times to override multiple
       parameters. String values must be passed in double quotes (").

In -generate mode this pass generates blackbox modules for the given cell
types (wildcards supported). For this the design is searched for cells that
match the given types and then the given port declarations are used to
determine the direction of the ports. The syntax for a port declaration is:

    {i|o|io}[@<num>]:<portname>
```

(continues on next page)

(continued from previous page)

```
Input ports are specified with the 'i' prefix, output ports with the 'o'
prefix and inout ports with the 'io' prefix. The optional <num> specifies
the position of the port in the parameter list (needed when instantiated
using positional arguments). When <num> is not specified, the <portname> can
also contain wildcard characters.

This pass ignores the current selection and always operates on all modules
in the current design.
```

10.100 hilomap - technology mapping of constant hi- and/or lo-drivers

yosys> help **hilomap**

```
    hilomap [options] [selection]

Map constants to 'tielo' and 'tiehi' driver cells.

    -hicell <celltype> <portname>
        Replace constant hi bits with this cell.

    -locell <celltype> <portname>
        Replace constant lo bits with this cell.

    -singleton
        Create only one hi/lo cell and connect all constant bits
        to that cell. Per default a separate cell is created for
        each constant bit.
```

10.101 history - show last interactive commands

yosys> help **history**

```
    history

This command prints all commands in the shell history buffer. This are
all commands executed in an interactive session, but not the commands
from executed scripts.
```

10.102 ice40_braminit - iCE40: perform SB_RAM40_4K initialization from file

yosys> help **ice40_braminit**

```
    ice40_braminit

This command processes all SB_RAM40_4K blocks with a non-empty INIT_FILE
parameter and converts it into the required INIT_x attributes
```

10.103 ice40_dsp - iCE40: map multipliers

yosys> help **ice40_dsp**

```
    ice40_dsp [options] [selection]

Map multipliers ($mul/SB_MAC16) and multiply-accumulate ($mul/SB_MAC16 + $add)
cells into iCE40 DSP resources.
Currently, only the 16x16 multiply mode is supported and not the 2 x 8x8 mode.

Pack input registers (A, B, {C,D}; with optional hold), pipeline registers
({F,J,K,G}, H), output registers (O -- full 32-bits or lower 16-bits only; with
optional hold), and post-adder into the SB_MAC16 resource.

Multiply-accumulate operations using the post-adder with feedback on the {C,D}
input will be folded into the DSP. In this scenario only, resetting the
the accumulator to an arbitrary value can be inferred to use the {C,D} input.
```

10.104 ice40_opt - iCE40: perform simple optimizations

yosys> help **ice40_opt**

```
    ice40_opt [options] [selection]

This command executes the following script:

    do
        <ice40 specific optimizations>
        opt_expr -mux_undef -undriven [-full]
        opt_merge
        opt_dff
        opt_clean
    while <changed design>
```

10.105 ice40_wrapcarry - iCE40: wrap carries

yosys> help **ice40_wrapcarry**

```
    ice40_wrapcarry [selection]

Wrap manually instantiated SB_CARRY cells, along with their associated SB_LUT4s,
into an internal $__ICE40_CARRY_WRAPPER cell for preservation across technology
mapping.

Attributes on both cells will have their names prefixed with 'SB_CARRY.' or
'SB_LUT4.' and attached to the wrapping cell.
A (* keep *) attribute on either cell will be logically OR-ed together.

    -unwrap
        unwrap $__ICE40_CARRY_WRAPPER cells back into SB_CARRYs and SB_LUT4s,
        including restoring their attributes.
```

10.106 insbuf - insert buffer cells for connected wires

yosys> help **insbuf**

```
    insbuf [options] [selection]

Insert buffer cells into the design for directly connected wires.

    -buf <celltype> <in-portname> <out-portname>
        Use the given cell type instead of $_BUF_. (Notice that the next
        call to "clean" will remove all $_BUF_ in the design.)

    -chain
        Chain buffer cells
```

10.107 internal_stats - print internal statistics

yosys> help **internal_stats**

```
Print internal statistics for developers (experimental)
```

10.108 iopadmap - technology mapping of i/o pads (or buffers)

yosys> help **iopadmap**

```
    iopadmap [options] [selection]

Map module inputs/outputs to PAD cells from a library. This pass
can only map to very simple PAD cells. Use 'techmap' to further map
the resulting cells to more sophisticated PAD cells.

    -inpad <celltype> <in_port>[:<ext_port>]
        Map module input ports to the given cell type with the
        given output port name. if a 2nd portname is given, the
        signal is passed through the pad cell, using the 2nd
        portname as the port facing the module port.

    -outpad <celltype> <out_port>[:<ext_port>]
    -inoutpad <celltype> <io_port>[:<ext_port>]
        Similar to -inpad, but for output and inout ports.

    -toutpad <celltype> <oe_port>:<out_port>[:<ext_port>]
        Merges $_TBUF_ cells into the output pad cell. This takes precedence
        over the other -outpad cell. The first portname is the enable input
        of the tristate driver, which can be prefixed with `~` for negative
        polarity enable.

    -tinoutpad <celltype> <oe_port>:<in_port>:<out_port>[:<ext_port>]
        Merges $_TBUF_ cells into the inout pad cell. This takes precedence
        over the other -inoutpad cell. The first portname is the enable input
```

(continues on next page)

(continued from previous page)

```
        of the tristate driver and the 2nd portname is the internal output
        buffering the external signal.  Like with `-toutpad`, the enable can
        be marked as negative polarity by prefixing the name with `~`.

    -ignore <celltype> <portname>[:<portname>]*
        Skips mapping inputs/outputs that are already connected to given
        ports of the given cell.  Can be used multiple times.  This is in
        addition to the cells specified as mapping targets.

    -widthparam <param_name>
        Use the specified parameter name to set the port width.

    -nameparam <param_name>
        Use the specified parameter to set the port name.

    -bits
        create individual bit-wide buffers even for ports that
        are wider. (the default behavior is to create word-wide
        buffers using -widthparam to set the word size on the cell.)

Tristate PADS (-toutpad, -tinoutpad) always operate in -bits mode.
```

10.109 jny - write design and metadata

yosys> help **jny**

```
    jny [options] [selection]

Write JSON netlist metadata for the current design

    -o <filename>
        write to the specified file.

    -no-connections
        Don't include connection information in the netlist output.

    -no-attributes
        Don't include attributed information in the netlist output.

    -no-properties
        Don't include property information in the netlist output.

See 'help write_jny' for a description of the JSON format used.
```

10.110 json - write design in JSON format

yosys> help **json**

```
    json [options] [selection]

Write a JSON netlist of all selected objects.

    -o <filename>
        write to the specified file.

    -aig
        also include AIG models for the different gate types

    -compat-int
        emit 32-bit or smaller fully-defined parameter values directly
        as JSON numbers (for compatibility with old parsers)

    -noscopeinfo
        don't include $scopeinfo cells in the output

See 'help write_json' for a description of the JSON format used.
```

10.111 keep_hierarchy - selectively add the keep_hierarchy attribute

yosys> help **keep_hierarchy**

```
    keep_hierarchy [options] [selection]

Add the keep_hierarchy attribute.

    -min_cost <min_cost>
        only add the attribute to modules estimated to have more than <min_cost>
        gates after simple techmapping. Intended for tuning trade-offs between
        quality and yosys runtime.

        When evaluating a module's cost, gates which are within a submodule
        which is marked with the keep_hierarchy attribute are not counted
        towards the upper module's cost. This applies to both when the attribute
        was added by this command or was pre-existing.
```

10.112 lattice_gsr - Lattice: handle GSR

yosys> help **lattice_gsr**

```
    lattice_gsr [options] [selection]

Trim active low async resets connected to GSR and resolve GSR parameter,
if a GSR or SGSR primitive is used in the design.

If any cell has the GSR parameter set to "AUTO", this will be resolved
to "ENABLED" if a GSR primitive is present and the (* nogsr *) attribute
is not set, otherwise it will be resolved to "DISABLED".
```

10.113 libcache - control caching of technology library data parsed from liberty files

yosys> help **libcache**

```
    libcache {-enable|-disable|-purge} { -all | [path]... }

Controls the default and per path caching of liberty file data.

    -enable    Enable caching.
    -disable   Disable caching.
    -purge     Reset cache setting and forget cached data.

This mode takes a list of paths as argument. If no paths are provided, this
command does nothing. The -all option can be used to change the default cache
setting for -enable/-disable or to reset and forget about all paths.

By default caching is disabled.

    libcache -list

Displays the current cache settings and cached paths.
```

10.114 license - print license terms

yosys> help **license**

```
    license

This command produces the following notice.

 /----------------------------------------------------------------------------\
 |                                                                            |
 |  yosys -- Yosys Open SYnthesis Suite                                       |
 |                                                                            |
 |  Copyright (C) 2012 - 2025  Claire Xenia Wolf <claire@yosyshq.com>         |
 |                                                                            |
 |  Permission to use, copy, modify, and/or distribute this software for any  |
 |  purpose with or without fee is hereby granted, provided that the above    |
 |  copyright notice and this permission notice appear in all copies.         |
 |                                                                            |
 |  THE SOFTWARE IS PROVIDED "AS IS" AND THE AUTHOR DISCLAIMS ALL WARRANTIES  |
 |  WITH REGARD TO THIS SOFTWARE INCLUDING ALL IMPLIED WARRANTIES OF          |
 |  MERCHANTABILITY AND FITNESS. IN NO EVENT SHALL THE AUTHOR BE LIABLE FOR   |
 |  ANY SPECIAL, DIRECT, INDIRECT, OR CONSEQUENTIAL DAMAGES OR ANY DAMAGES    |
 |  WHATSOEVER RESULTING FROM LOSS OF USE, DATA OR PROFITS, WHETHER IN AN     |
 |  ACTION OF CONTRACT, NEGLIGENCE OR OTHER TORTIOUS ACTION, ARISING OUT OF   |
 |  OR IN CONNECTION WITH THE USE OR PERFORMANCE OF THIS SOFTWARE.            |
 |                                                                            |
 \----------------------------------------------------------------------------/
```

10.115 log - print text and log files

yosys> help **log**

```
    log [options] string
    log [ -push | -pop ]

Print the given string to the screen and/or the log file. This is useful for TCL
scripts, because the TCL command "puts" only goes to stdout but not to
logfiles.

    -stdout
        Print the output to stdout too. This is useful when all Yosys is
        executed with a script and the -q (quiet operation) argument to notify
        the user.

    -stderr
        Print the output to stderr too.

    -nolog
        Don't use the internal log() command. Use either -stdout or -stderr,
        otherwise no output will be generated at all.

    -n
        do not append a newline

    -header
        log a pass header

    -push
        push a new level on the pass counter

    -pop
        pop from the pass counter
```

10.116 logger - set logger properties

yosys> help **logger**

```
    logger [options]

This command sets global logger properties, also available using command line
options.

    -[no]time
        enable/disable display of timestamp in log output.

    -[no]stderr
        enable/disable logging errors to stderr.

    -warn regex
        print a warning for all log messages matching the regex.
```

(continues on next page)

(continued from previous page)

```
    -nowarn regex
        if a warning message matches the regex, it is printed as regular
        message instead.

    -werror regex
        if a warning message matches the regex, it is printed as error
        message instead and the tool terminates with a nonzero return code.

    -[no]debug
        globally enable/disable debug log messages.

    -experimental <feature>
        do not print warnings for the specified experimental feature

    -expect <type> <regex> <expected_count>
        expect log, warning or error to appear. matched errors will terminate
        with exit code 0.

    -expect-no-warnings
        gives error in case there is at least one warning that is not expected.

    -check-expected
        verifies that the patterns previously set up by -expect have actually
        been met, then clears the expected log list.  If this is not called
        manually, the check will happen at yosys exist time instead.
```

10.117 ls - list modules or objects in modules

yosys> help **ls**

```
    ls [selection]

When no active module is selected, this prints a list of modules.

When an active module is selected, this prints a list of objects in the module.
```

10.118 ltp - print longest topological path

yosys> help **ltp**

```
    ltp [options] [selection]

This command prints the longest topological path in the design. (Only considers
paths within a single module, so the design must be flattened.)

    -noff
        automatically exclude FF cell types
```

10.119 lut2mux - convert $lut to $_MUX_

yosys> help **lut2mux**

```
    lut2mux [options] [selection]

This pass converts $lut cells to $_MUX_ gates.
```

10.120 maccmap - mapping macc cells

yosys> help **maccmap**

```
    maccmap [-unmap] [selection]

This pass maps $macc cells to yosys $fa and $alu cells. When the -unmap option
is used then the $macc cell is mapped to $add, $sub, etc. cells instead.
```

10.121 memory - translate memories to basic cells

yosys> help **memory**

```
    memory [-norom] [-nomap] [-nordff] [-nowiden] [-nosat] [-memx] [-no-rw-check] [-bram
↪<bram_rules>] [selection]

This pass calls all the other memory_* passes in a useful order:

    opt_mem
    opt_mem_priority
    opt_mem_feedback
    memory_bmux2rom                     (skipped if called with -norom)
    memory_dff [-no-rw-check]           (skipped if called with -nordff or -memx)
    opt_clean
    memory_share [-nowiden] [-nosat]
    opt_mem_widen
    memory_memx                         (when called with -memx)
    opt_clean
    memory_collect
    memory_bram -rules <bram_rules>     (when called with -bram)
    memory_map                          (skipped if called with -nomap)

This converts memories to word-wide DFFs and address decoders
or multiport memory blocks if called with the -nomap option.
```

10.122 memory_bmux2rom - convert muxes to ROMs

yosys> help **memory_bmux2rom**

```
    memory_bmux2rom [options] [selection]

This pass converts $bmux cells with constant A input to ROMs.
```

10.123 memory_bram - map memories to block rams

yosys> help **memory_bram**

```
    memory_bram -rules <rule_file> [selection]

This pass converts the multi-port $mem memory cells into block ram instances.
The given rules file describes the available resources and how they should be
used.

The rules file contains configuration options, a set of block ram description
and a sequence of match rules.

The option 'attr_icase' configures how attribute values are matched. The value 0
means case-sensitive, 1 means case-insensitive.

A block ram description looks like this:

    bram RAMB1024X32     # name of BRAM cell
      init 1             # set to '1' if BRAM can be initialized
      abits 10           # number of address bits
      dbits 32           # number of data bits
      groups 2           # number of port groups
      ports  1 1         # number of ports in each group
      wrmode 1 0         # set to '1' if this groups is write ports
      enable 4 1         # number of enable bits
      transp 0 2         # transparent (for read ports)
      clocks 1 2         # clock configuration
      clkpol 2 2         # clock polarity configuration
    endbram

For the option 'transp' the value 0 means non-transparent, 1 means transparent
and a value greater than 1 means configurable. All groups with the same
value greater than 1 share the same configuration bit.

For the option 'clocks' the value 0 means non-clocked, and a value greater
than 0 means clocked. All groups with the same value share the same clock
signal.

For the option 'clkpol' the value 0 means negative edge, 1 means positive edge
and a value greater than 1 means configurable. All groups with the same value
greater than 1 share the same configuration bit.

Using the same bram name in different bram blocks will create different variants
of the bram. Verilog configuration parameters for the bram are created as
needed.

It is also possible to create variants by repeating statements in the bram block
and appending '@<label>' to the individual statements.

A match rule looks like this:

    match RAMB1024X32
```

(continues on next page)

(continued from previous page)

```
      max waste 16384    # only use this bram if <= 16k ram bits are unused
      min efficiency 80  # only use this bram if efficiency is at least 80%
    endmatch

It is possible to match against the following values with min/max rules:

    words  ........  number of words in memory in design
    abits  ........  number of address bits on memory in design
    dbits  ........  number of data bits on memory in design
    wports  .......  number of write ports on memory in design
    rports  .......  number of read ports on memory in design
    ports  ........  number of ports on memory in design
    bits  .........  number of bits in memory in design
    dups ..........  number of duplications for more read ports

    awaste  .......  number of unused address slots for this match
    dwaste  .......  number of unused data bits for this match
    bwaste  .......  number of unused bram bits for this match
    waste  ........  total number of unused bram bits (bwaste*dups)
    efficiency  ...  total percentage of used and non-duplicated bits

    acells  .......  number of cells in 'address-direction'
    dcells  .......  number of cells in 'data-direction'
    cells  ........  total number of cells (acells*dcells*dups)

A match containing the command 'attribute' followed by a list of space
separated 'name[=string_value]' values requires that the memory contains any
one of the given attribute name and string values (where specified), or name
and integer 1 value (if no string_value given, since Verilog will interpret
'(* attr *)' as '(* attr=1 *)').
A name prefixed with '!' indicates that the attribute must not exist.

The interface for the created bram instances is derived from the bram
description. Use 'techmap' to convert the created bram instances into
instances of the actual bram cells of your target architecture.

A match containing the command 'or_next_if_better' is only used if it
has a higher efficiency than the next match (and the one after that if
the next also has 'or_next_if_better' set, and so forth).

A match containing the command 'make_transp' will add external circuitry
to simulate 'transparent read', if necessary.

A match containing the command 'make_outreg' will add external flip-flops
to implement synchronous read ports, if necessary.

A match containing the command 'shuffle_enable A' will re-organize
the data bits to accommodate the enable pattern of port A.
```

10.124 memory_collect - creating multi-port memory cells

yosys> help **memory_collect**

```
    memory_collect [selection]

This pass collects memories and memory ports and creates generic multiport
memory cells.
```

10.125 memory_dff - merge input/output DFFs into memory read ports

yosys> help **memory_dff**

```
    memory_dff [-no-rw-check] [selection]

This pass detects DFFs at memory read ports and merges them into the memory
port. I.e. it consumes an asynchronous memory port and the flip-flops at its
interface and yields a synchronous memory port.

    -no-rw-check
        marks all recognized read ports as "return don't-care value on
        read/write collision" (same result as setting the no_rw_check
        attribute on all memories).
```

10.126 memory_libmap - map memories to cells

yosys> help **memory_libmap**

```
    memory_libmap -lib <library_file> [-D <condition>] [selection]

This pass takes a description of available RAM cell types and maps
all selected memories to one of them, or leaves them to be mapped to FFs.

  -lib <library_file>
    Selects a library file containing RAM cell definitions. This option
    can be passed more than once to select multiple libraries.
    See passes/memory/memlib.md for description of the library format.

  -D <condition>
    Enables a condition that can be checked within the library file
    to eg. select between slightly different hardware variants.
    This option can be passed any number of times.

  -logic-cost-rom <num>
  -logic-cost-ram <num>
    Sets the cost of a single bit for memory lowered to soft logic.

  -no-auto-distributed
  -no-auto-block
  -no-auto-huge
```

(continues on next page)

(continued from previous page)

```
    Disables automatic mapping of given kind of RAMs.  Manual mapping
    (using ram_style or other attributes) is still supported.
```

10.127 memory_map - translate multiport memories to basic cells

yosys> help **memory_map**

```
    memory_map [options] [selection]

This pass converts multiport memory cells as generated by the memory_collect
pass to word-wide DFFs and address decoders.

    -attr !<name>
        do not map memories that have attribute <name> set.

    -attr <name>[=<value>]
        for memories that have attribute <name> set, only map them if its value
        is a string <value> (if specified), or an integer 1 (otherwise). if this
        option is specified multiple times, map the memory if the attribute is
        to any of the values.

    -iattr
        for -attr, suppress case sensitivity in matching of <value>.

    -rom-only
        only perform conversion for ROMs (memories with no write ports).

    -keepdc
        when mapping ROMs, keep x-bits shared across read ports.

    -formal
        map memories for a global clock based formal verification flow.
        This implies -keepdc, uses $ff cells for ROMs and sets hdlname
        attributes. It also has limited support for async write ports
        as generated by clk2fflogic.
```

10.128 memory_memx - emulate vlog sim behavior for mem ports

yosys> help **memory_memx**

```
    memory_memx [selection]

This pass adds additional circuitry that emulates the Verilog simulation
behavior for out-of-bounds memory reads and writes.
```

10.129 memory_narrow - split up wide memory ports

yosys> help **memory_narrow**

```
    memory_narrow [options] [selection]

This pass splits up wide memory ports into several narrow ports.
```

10.130 memory_nordff - extract read port FFs from memories

yosys> help **memory_nordff**

```
    memory_nordff [options] [selection]

This pass extracts FFs from memory read ports. This results in a netlist
similar to what one would get from not calling memory_dff.
```

10.131 memory_share - consolidate memory ports

yosys> help **memory_share**

```
    memory_share [-nosat] [-nowiden] [selection]

This pass merges share-able memory ports into single memory ports.

The following methods are used to consolidate the number of memory ports:

  - When multiple write ports access the same address then this is converted
    to a single write port with a more complex data and/or enable logic path.

  - When multiple read or write ports access adjacent aligned addresses, they
    are merged to a single wide read or write port.  This transformation can be
    disabled with the "-nowiden" option.

  - When multiple write ports are never accessed at the same time (a SAT
    solver is used to determine this), then the ports are merged into a single
    write port.  This transformation can be disabled with the "-nosat" option.

Note that in addition to the algorithms implemented in this pass, the $memrd
and $memwr cells are also subject to generic resource sharing passes (and other
optimizations) such as "share" and "opt_merge".
```

10.132 memory_unpack - unpack multi-port memory cells

yosys> help **memory_unpack**

```
    memory_unpack [selection]

This pass converts the multi-port $mem memory cells into individual $memrd and
$memwr cells. It is the counterpart to the memory_collect pass.
```

10.133 microchip_dffopt - MICROCHIP: optimize FF control signal usage

yosys> help **microchip_dffopt**

```
    microchip_dffopt [options] [selection]

Converts hardware clock enable and set/reset signals on FFs to emulation
using LUTs, if doing so would improve area. Operates on post-techmap LUT, DFF
cells.
```

10.134 microchip_dsp - MICROCHIP: pack resources into DSPs

yosys> help **microchip_dsp**

```
    microchip_dsp [options] [selection]

Pack input registers 'A', 'B', 'C', and 'D' (with optional enable/reset),
output register 'P' (with optional enable/reset), pre-adder and/or post-adder into
Microchip DSP resources.

Multiply-accumulate operations using the post-adder with feedback on the 'C'
input will be folded into the DSP. In this scenario only, the 'C' input can be
used to override the current accumulation result with a new value. This will
be added to the multiplier result to form the next accumulation result.

Use of the dedicated 'PCOUT' -> 'PCIN' cascade path is detected for 'P' -> 'C'
connections (optionally, where 'P' is right-shifted by 17-bits and used as an
input to the post-adder. This pattern is common for summing partial products to
implement wide multipliers). Cascade chains are limited to a mazimum length
of 24 cells, corresponding to PolarFire (pf) devices.

This pass is a no-op if the scratchpad variable 'microchip_dsp.multonly' is set
to 1.


    -family {polarfire}
        select the family to target
        default: polarfire
```

10.135 miter - automatically create a miter circuit

yosys> help **miter**

```
    miter -equiv [options] gold_name gate_name miter_name

Creates a miter circuit for equivalence checking. The gold- and gate- modules
must have the same interfaces. The miter circuit will have all inputs of the
two source modules, prefixed with 'in_'. The miter circuit has a 'trigger'
output that goes high if an output mismatch between the two source modules is
```

(continues on next page)

(continued from previous page)

```
detected.

    -ignore_gold_x
        a undef (x) bit in the gold module output will match any value in
        the gate module output.

    -make_outputs
        also route the gold- and gate-outputs to 'gold_*' and 'gate_*' outputs
        on the miter circuit.

    -make_outcmp
        also create a cmp_* output for each gold/gate output pair.

    -make_assert
        also create an 'assert' cell that checks if trigger is always low.

    -make_cover
        also create a 'cover' cell for each gold/gate output pair.

    -flatten
        call 'flatten -wb; opt_expr -keepdc -undriven;;' on the miter circuit.


    -cross
        allow output ports on the gold module to match input ports on the
        gate module. This is useful when the gold module contains additional
        logic to drive some of the gate module inputs.


    miter -assert [options] module [miter_name]

Creates a miter circuit for property checking. All input ports are kept,
output ports are discarded. An additional output 'trigger' is created that
goes high when an assert is violated. Without a miter_name, the existing
module is modified.

    -make_outputs
        keep module output ports.

    -flatten
        call 'flatten -wb; opt_expr -keepdc -undriven;;' on the miter circuit.
```

10.136 mutate - generate or apply design mutations

yosys> help **mutate**

```
    mutate -list N [options] [selection]

Create a list of N mutations using an even sampling.

    -o filename
```

(continues on next page)

(continued from previous page)

```
        Write list to this file instead of console output

    -s filename
        Write a list of all src tags found in the design to the specified file

    -seed N
        RNG seed for selecting mutations

    -none
        Include a "none" mutation in the output

    -ctrl name width value
        Add -ctrl options to the output. Use 'value' for first mutation, then
        simply count up from there.

    -mode name
    -module name
    -cell name
    -port name
    -portbit int
    -ctrlbit int
    -wire name
    -wirebit int
    -src string
        Filter list of mutation candidates to those matching
        the given parameters.

    -cfg option int
        Set a configuration option. Options available:
          weight_pq_w weight_pq_b weight_pq_c weight_pq_s
          weight_pq_mw weight_pq_mb weight_pq_mc weight_pq_ms
          weight_cover pick_cover_prcnt


    mutate -mode MODE [options]

Apply the given mutation.

    -ctrl name width value
        Add a control signal with the given name and width. The mutation is
        activated if the control signal equals the given value.

    -module name
    -cell name
    -port name
    -portbit int
    -ctrlbit int
        Mutation parameters, as generated by 'mutate -list N'.

    -wire name
    -wirebit int
    -src string
```

(continues on next page)

(continued from previous page)

```
        Ignored. (They are generated by -list for documentation purposes.)
```

10.137 muxcover - cover trees of MUX cells with wider MUXes

yosys> help **muxcover**

```
    muxcover [options] [selection]

Cover trees of $_MUX_ cells with $_MUX{4,8,16}_ cells

    -mux4[=cost], -mux8[=cost], -mux16[=cost]
        Cover $_MUX_ trees using the specified types of MUXes (with optional
        integer costs). If none of these options are given, the effect is the
        same as if all of them are.
        Default costs: $_MUX4_ = 220, $_MUX8_ = 460,
                       $_MUX16_ = 940

    -mux2=cost
        Use the specified cost for $_MUX_ cells when making covering decisions.
        Default cost: $_MUX_ = 100

    -dmux=cost
        Use the specified cost for $_MUX_ cells used in decoders.
        Default cost: 90

    -nodecode
        Do not insert decoder logic. This reduces the number of possible
        substitutions, but guarantees that the resulting circuit is not
        less efficient than the original circuit.

    -nopartial
        Do not consider mappings that use $_MUX<N>_ to select from less
        than <N> different signals.
```

10.138 muxpack - $mux/$pmux cascades to $pmux

yosys> help **muxpack**

```
    muxpack [selection]

This pass converts cascaded chains of $pmux cells (e.g. those create from case
constructs) and $mux cells (e.g. those created by if-else constructs) into
$pmux cells.

This optimisation is conservative --- it will only pack $mux or $pmux cells
whose select lines are driven by '$eq' cells with other such cells if it can be
certain that their select inputs are mutually exclusive.
```

10.139 nlutmap - map to LUTs of different sizes

yosys> help **nlutmap**

```
    nlutmap [options] [selection]

This pass uses successive calls to 'abc' to map to an architecture. That
provides a small number of differently sized LUTs.

    -luts N_1,N_2,N_3,...
        The number of LUTs with 1, 2, 3, ... inputs that are
        available in the target architecture.

    -assert
        Create an error if not all logic can be mapped

Excess logic that does not fit into the specified LUTs is mapped back
to generic logic gates ($_AND_, etc.).
```

10.140 nx_carry - NanoXplore: create carry cells

yosys> help **nx_carry**

```
    nx_carry [options] [selection]

Fixes carry chain if needed, break it on 24 elements and group by 4 into NX_CY.
```

10.141 onehot - optimize $eq cells for onehot signals

yosys> help **onehot**

```
    onehot [options] [selection]

This pass optimizes $eq cells that compare one-hot signals against constants

    -v, -vv
        verbose output
```

10.142 opt - perform simple optimizations

yosys> help **opt**

```
    opt [options] [selection]

This pass calls all the other opt_* passes in a useful order. This performs
a series of trivial optimizations and cleanups. This pass executes the other
passes in the following order:

    opt_expr [-mux_undef] [-mux_bool] [-undriven] [-noclkinv] [-fine] [-full] [-keepdc]
```

(continues on next page)

(continued from previous page)

```
    opt_merge [-share_all] -nomux

    do
        opt_muxtree
        opt_reduce [-fine] [-full]
        opt_merge [-share_all]
        opt_share  (-full only)
        opt_dff [-nodffe] [-nosdff] [-keepdc] [-sat]  (except when called with -noff)
        opt_clean [-purge]
        opt_expr [-mux_undef] [-mux_bool] [-undriven] [-noclkinv] [-fine] [-full] [-
↪keepdc]
    while <changed design>

When called with -fast the following script is used instead:

    do
        opt_expr [-mux_undef] [-mux_bool] [-undriven] [-noclkinv] [-fine] [-full] [-
↪keepdc]
        opt_merge [-share_all]
        opt_dff [-nodffe] [-nosdff] [-keepdc] [-sat]  (except when called with -noff)
        opt_clean [-purge]
    while <changed design in opt_dff>

Note: Options in square brackets (such as [-keepdc]) are passed through to
the opt_* commands when given to 'opt'.
```

10.143 opt_clean - remove unused cells and wires

yosys> help **opt_clean**

```
    opt_clean [options] [selection]

This pass identifies wires and cells that are unused and removes them. Other
passes often remove cells but leave the wires in the design or reconnect the
wires but leave the old cells in the design. This pass can be used to clean up
after the passes that do the actual work.

This pass only operates on completely selected modules without processes.

    -purge
        also remove internal nets if they have a public name
```

10.144 opt_demorgan - Optimize reductions with DeMorgan equivalents

yosys> help **opt_demorgan**

```
    opt_demorgan [selection]
```

(continues on next page)

(continued from previous page)

```
This pass pushes inverters through $reduce_* cells if this will reduce the
overall gate count of the circuit
```

10.145 opt_dff - perform DFF optimizations

yosys> help **opt_dff**

```
    opt_dff [-nodffe] [-nosdff] [-keepdc] [-sat] [selection]

This pass converts flip-flops to a more suitable type by merging clock enables
and synchronous reset multiplexers, removing unused control inputs, or
potentially removes the flip-flop altogether, converting it to a constant
driver.

    -nodffe
        disables dff -> dffe conversion, and other transforms recognizing clock
        enable

    -nosdff
        disables dff -> sdff conversion, and other transforms recognizing sync
        resets

    -simple-dffe
        only enables clock enable recognition transform for obvious cases

    -sat
        additionally invoke SAT solver to detect and remove flip-flops (with
        non-constant inputs) that can also be replaced with a constant driver

    -keepdc
        some optimizations change the behavior of the circuit with respect to
        don't-care bits. for example in 'a+0' a single x-bit in 'a' will cause
        all result bits to be set to x. this behavior changes when 'a+0' is
        replaced by 'a'. the -keepdc option disables all such optimizations.
```

10.146 opt_expr - perform const folding and simple expression rewriting

yosys> help **opt_expr**

```
    opt_expr [options] [selection]

This pass performs const folding on internal cell types with constant inputs.
It also performs some simple expression rewriting.

    -mux_undef
        remove 'undef' inputs from $mux, $pmux and $_MUX_ cells

    -mux_bool
        replace $mux cells with inverters or buffers when possible
```

(continues on next page)

(continued from previous page)

```
    -undriven
        replace undriven nets with undef (x) constants

    -noclkinv
        do not optimize clock inverters by changing FF types

    -fine
        perform fine-grain optimizations

    -full
        alias for -mux_undef -mux_bool -undriven -fine

    -keepdc
        some optimizations change the behavior of the circuit with respect to
        don't-care bits. for example in 'a+0' a single x-bit in 'a' will cause
        all result bits to be set to x. this behavior changes when 'a+0' is
        replaced by 'a'. the -keepdc option disables all such optimizations.
```

10.147 opt_ffinv - push inverters through FFs

yosys> help **opt_ffinv**

```
    opt_ffinv [selection]

This pass pushes inverters to the other side of a FF when they can be merged
into LUTs on the other side.
```

10.148 opt_lut - optimize LUT cells

yosys> help **opt_lut**

```
    opt_lut [options] [selection]

This pass combines cascaded $lut cells with unused inputs.

  -tech ice40
        treat the design as a LUT-mapped circuit for the iCE40 architecture
        and preserve connections to SB_CARRY as appropriate

    -limit N
        only perform the first N combines, then stop. useful for debugging.
```

10.149 opt_lut_ins - discard unused LUT inputs

yosys> help **opt_lut_ins**

```
    opt_lut_ins [options] [selection]

This pass removes unused inputs from LUT cells (that is, inputs that can not
influence the output signal given this LUT's value).  While such LUTs cannot
be directly emitted by ABC, they can be a result of various post-ABC
transformations, such as mapping wide LUTs (not all sub-LUTs will use the
full set of inputs) or optimizations such as xilinx_dffopt.

    -tech <technology>
        Instead of generic $lut cells, operate on LUT cells specific
        to the given technology.  Valid values are: xilinx, lattice, gowin.
```

10.150 opt_mem - optimize memories

yosys> help **opt_mem**

```
    opt_mem [options] [selection]

This pass performs various optimizations on memories in the design.
```

10.151 opt_mem_feedback - convert memory read-to-write port feedback paths to write enables

yosys> help **opt_mem_feedback**

```
    opt_mem_feedback [selection]

This pass detects cases where an asynchronous read port is only connected via
a mux tree to a write port with the same address.  When such a connection is
found, it is replaced with a new condition on an enable signal, allowing
for removal of the read port.
```

10.152 opt_mem_priority - remove priority relations between write ports that can never collide

yosys> help **opt_mem_priority**

```
    opt_mem_priority [selection]

This pass detects cases where one memory write port has priority over another
even though they can never collide with each other -- ie. there can never be
a situation where a given memory bit is written by both ports at the same
time, for example because of always-different addresses, or mutually exclusive
enable signals. In such cases, the priority relation is removed.
```

10.153 opt_mem_widen - optimize memories where all ports are wide

yosys> help **opt_mem_widen**

```
    opt_mem_widen [options] [selection]

This pass looks for memories where all ports are wide and adjusts the base
memory width up until that stops being the case.
```

10.154 opt_merge - consolidate identical cells

yosys> help **opt_merge**

```
    opt_merge [options] [selection]

This pass identifies cells with identical type and input signals. Such cells
are then merged to one cell.

    -nomux
        Do not merge MUX cells.

    -share_all
        Operate on all cell types, not just built-in types.

    -keepdc
        Do not merge flipflops with don't-care bits in their initial value.
```

10.155 opt_muxtree - eliminate dead trees in multiplexer trees

yosys> help **opt_muxtree**

```
    opt_muxtree [selection]

This pass analyzes the control signals for the multiplexer trees in the design
and identifies inputs that can never be active. It then removes this dead
branches from the multiplexer trees.

This pass only operates on completely selected modules without processes.
```

10.156 opt_reduce - simplify large MUXes and AND/OR gates

yosys> help **opt_reduce**

```
    opt_reduce [options] [selection]

This pass performs two interlinked optimizations:

1. it consolidates trees of large AND gates or OR gates and eliminates
duplicated inputs.
```

(continues on next page)

(continued from previous page)

```
2. it identifies duplicated inputs to MUXes and replaces them with a single
input with the original control signals OR'ed together.

    -fine
      perform fine-grain optimizations

    -full
      alias for -fine
```

10.157 opt_share - merge mutually exclusive cells of the same type that share an input signal

yosys> help **opt_share**

```
    opt_share [selection]

This pass identifies mutually exclusive cells of the same type that:
    (a) share an input signal,
    (b) drive the same $mux, $_MUX_, or $pmux multiplexing cell,

allowing the cell to be merged and the multiplexer to be moved from
multiplexing its output to multiplexing the non-shared input signals.
```

10.158 paramap - renaming cell parameters

yosys> help **paramap**

```
    paramap [options] [selection]

This command renames cell parameters and/or maps key/value pairs to
other key/value pairs.

    -tocase <name>
        Match attribute names case-insensitively and set it to the specified
        name.

    -rename <old_name> <new_name>
        Rename attributes as specified

    -map <old_name>=<old_value> <new_name>=<new_value>
        Map key/value pairs as indicated.

    -imap <old_name>=<old_value> <new_name>=<new_value>
        Like -map, but use case-insensitive match for <old_value> when
        it is a string value.

    -remove <name>=<value>
        Remove attributes matching this pattern.
```

(continues on next page)

(continued from previous page)

```
For example, mapping Diamond-style ECP5 "init" attributes to Yosys-style:

    paramap -tocase INIT t:LUT4
```

10.159 peepopt - collection of peephole optimizers

yosys> help **peepopt**

```
    peepopt [options] [selection]

This pass applies a collection of peephole optimizers to the current design.

This pass employs the following rules by default:

   * muldiv - Replace (A*B)/B with A

   * shiftmul - Replace A>>(B*C) with A'>>(B<<K) where C and K are constants
                and A' is derived from A by appropriately inserting padding
                into the signal. (right variant)

                Analogously, replace A<<(B*C) with appropriate selection of
                output bits from A<<(B<<K). (left variant)

   * shiftadd - Replace A>>(B+D) with (A'>>D)>>(B) where D is constant and
                A' is derived from A by padding or cutting inaccessible bits.
                Scratchpad: 'peepopt.shiftadd.max_data_multiple' (default: 2)
                limits the amount of padding to a multiple of the data,
                to avoid high resource usage from large temporary MUX trees.

If -formalclk is specified it instead employs the following rules:

   * clockgateff - Replace latch based clock gating patterns with a flip-flop
                   based pattern to prevent combinational paths from the
                   output to the enable input after running clk2fflogic.
```

10.160 plugin - load and list loaded plugins

yosys> help **plugin**

```
    plugin [options]

Load and list loaded plugins.

    -i <plugin_filename>
        Load (install) the specified plugin.

    -a <alias_name>
        Register the specified alias name for the loaded plugin
```

(continues on next page)

(continued from previous page)

```
    -l
        List loaded plugins
```

10.161 pmux2shiftx - transform $pmux cells to $shiftx cells

yosys> help **pmux2shiftx**

```
    pmux2shiftx [options] [selection]

This pass transforms $pmux cells to $shiftx cells.

    -v, -vv
        verbose output

    -min_density <percentage>
        specifies the minimum density for the shifter
        default: 50

    -min_choices <int>
        specified the minimum number of choices for a control signal
        default: 3

    -onehot ignore|pmux|shiftx
        select strategy for one-hot encoded control signals
        default: pmux

    -norange
        disable $sub inference for "range decoders"
```

10.162 pmuxtree - transform $pmux cells to trees of $mux cells

yosys> help **pmuxtree**

```
    pmuxtree [selection]

This pass transforms $pmux cells to trees of $mux cells.
```

10.163 portarcs - derive port arcs for propagation delay

yosys> help **portarcs**

```
    portarcs [options] [selection]

This command characterizes the combinational content of selected modules and
derives timing arcs going from module inputs to module outputs representing the
propagation delay of the module.
```

(continues on next page)

(continued from previous page)

```
    -draw
        plot the computed delay table to the terminal

    -icells
        assign unit delay to gates from the internal Yosys cell library

    -write
        write the computed arcs back into the module as $specify2 instances
```

10.164 portlist - list (top-level) ports

yosys> help **portlist**

```
    portlist [options] [selection]

This command lists all module ports found in the selected modules.

If no selection is provided then it lists the ports on the top module.

  -m
    print verilog blackbox module definitions instead of port lists
```

10.165 prep - generic synthesis script

yosys> help **prep**

```
    prep [options]

This command runs a conservative RTL synthesis. A typical application for this
is the preparation stage of a verification flow. This command does not operate
on partly selected designs.

    -top <module>
        use the specified module as top module (default='top')

    -auto-top
        automatically determine the top of the design hierarchy

    -flatten
        flatten the design before synthesis. this will pass '-auto-top' to
        'hierarchy' if no top module is specified.

    -ifx
        passed to 'proc'. uses verilog simulation behavior for verilog if/case
        undef handling. this also prevents 'wreduce' from being run.

    -memx
        simulate verilog simulation behavior for out-of-bounds memory accesses
        using the 'memory_memx' pass.
```

(continues on next page)

(continued from previous page)

```
    -nomem
        do not run any of the memory_* passes

    -rdff
        call 'memory_dff'. This enables merging of FFs into
        memory read ports.

    -nokeepdc
        do not call opt_* with -keepdc

    -run <from_label>[:<to_label>]
        only run the commands between the labels (see below). an empty
        from label is synonymous to 'begin', and empty to label is
        synonymous to the end of the command list.


The following commands are executed by this synthesis command:

    begin:
        hierarchy -check [-top <top> | -auto-top]

    coarse:
        proc [-ifx]
        flatten    (if -flatten)
        future
        opt_expr -keepdc
        opt_clean
        check
        opt -noff -keepdc
        wreduce -keepdc [-memx]
        memory_dff    (if -rdff)
        memory_memx    (if -memx)
        opt_clean
        memory_collect
        opt -noff -keepdc -fast

    check:
        stat
        check
```

10.166 printattrs - print attributes of selected objects

yosys> help **printattrs**

```
    printattrs [selection]

Print all attributes of the selected objects.
```

10.167 proc - translate processes to netlists

yosys> help **proc**

```
    proc [options] [selection]

This pass calls all the other proc_* passes in the most common order.

    proc_clean
    proc_rmdead
    proc_prune
    proc_init
    proc_arst
    proc_rom
    proc_mux
    proc_dlatch
    proc_dff
    proc_memwr
    proc_clean
    opt_expr -keepdc

This replaces the processes in the design with multiplexers,
flip-flops and latches.

The following options are supported:

    -nomux
        Will omit the proc_mux pass.

    -norom
        Will omit the proc_rom pass.

    -global_arst [!]<netname>
        This option is passed through to proc_arst.

    -ifx
        This option is passed through to proc_mux. proc_rmdead is not
        executed in -ifx mode.

    -noopt
        Will omit the opt_expr pass.
```

10.168 proc_arst - detect asynchronous resets

yosys> help **proc_arst**

```
    proc_arst [-global_arst [!]<netname>] [selection]

This pass identifies asynchronous resets in the processes and converts them
to a different internal representation that is suitable for generating
flip-flop cells with asynchronous resets.
```

(continues on next page)

(continued from previous page)

```
    -global_arst [!]<netname>
        In modules that have a net with the given name, use this net as async
        reset for registers that have been assign initial values in their
        declaration ('reg foobar = constant_value;'). Use the '!' modifier for
        active low reset signals. Note: the frontend stores the default value
        in the 'init' attribute on the net.
```

10.169 proc_clean - remove empty parts of processes

yosys> help **proc_clean**

```
    proc_clean [options] [selection]

    -quiet
        do not print any messages.

This pass removes empty parts of processes and ultimately removes a process
if it contains only empty structures.
```

10.170 proc_dff - extract flip-flops from processes

yosys> help **proc_dff**

```
    proc_dff [selection]

This pass identifies flip-flops in the processes and converts them to
d-type flip-flop cells.
```

10.171 proc_dlatch - extract latches from processes

yosys> help **proc_dlatch**

```
    proc_dlatch [selection]

This pass identifies latches in the processes and converts them to
d-type latches.
```

10.172 proc_init - convert initial block to init attributes

yosys> help **proc_init**

```
    proc_init [selection]

This pass extracts the 'init' actions from processes (generated from Verilog
'initial' blocks) and sets the initial value to the 'init' attribute on the
respective wire.
```

10.173 proc_memwr - extract memory writes from processes

yosys> help **proc_memwr**

```
    proc_memwr [selection]

This pass converts memory writes in processes into $memwr cells.
```

10.174 proc_mux - convert decision trees to multiplexers

yosys> help **proc_mux**

```
    proc_mux [options] [selection]

This pass converts the decision trees in processes (originating from if-else
and case statements) to trees of multiplexer cells.

    -ifx
        Use Verilog simulation behavior with respect to undef values in
        'case' expressions and 'if' conditions.
```

10.175 proc_prune - remove redundant assignments

yosys> help **proc_prune**

```
    proc_prune [selection]

This pass identifies assignments in processes that are always overwritten by
a later assignment to the same signal and removes them.
```

10.176 proc_rmdead - eliminate dead trees in decision trees

yosys> help **proc_rmdead**

```
    proc_rmdead [selection]

This pass identifies unreachable branches in decision trees and removes them.
```

10.177 proc_rom - convert switches to ROMs

yosys> help **proc_rom**

```
    proc_rom [selection]

This pass converts switches into read-only memories when appropriate.
```

10.178 qbfsat - solve a 2QBF-SAT problem in the circuit

yosys> help **qbfsat**

```
    qbfsat [options] [selection]

This command solves an "exists-forall" 2QBF-SAT problem defined over the
currently selected module. Existentially-quantified variables are declared by
assigning a wire "$anyconst". Universally-quantified variables may be
explicitly declared by assigning a wire "$allconst", but module inputs will be
treated as universally-quantified variables by default.

    -nocleanup
        Do not delete temporary files and directories. Useful for debugging.

    -dump-final-smt2 <file>
        Pass the --dump-smt2 option to yosys-smtbmc.

    -assume-outputs
        Add an "$assume" cell for the conjunction of all one-bit module output
        wires.

    -assume-negative-polarity
        When adding $assume cells for one-bit module output wires, assume they
        are negative polarity signals and should always be low, for example like
        the miters created with the `miter` command.

    -nooptimize
        Ignore "\minimize" and "\maximize" attributes, do not emit
        "(maximize)" or "(minimize)" in the SMT-LIBv2, and generally make no
        attempt to optimize anything.

    -nobisection
        If a wire is marked with the "\minimize" or "\maximize" attribute,
        do not attempt to optimize that value with the default iterated solving
        and threshold bisection approach. Instead, have yosys-smtbmc emit a
        "(minimize)" or "(maximize)" command in the SMT-LIBv2 output and
        hope that the solver supports optimizing quantified bitvector problems.

    -solver <solver>
        Use a particular solver. Choose one of: "z3", "yices", "cvc4"
        and "cvc5". (default: yices)

    -solver-option <name> <value>
        Set the specified solver option in the SMT-LIBv2 problem file.

    -timeout <value>
        Set the per-iteration timeout in seconds.
        (default: no timeout)

    -O0, -O1, -O2
        Control the use of ABC to simplify the QBF-SAT problem before solving.
```

(continues on next page)

(continued from previous page)

```
    -sat
        Generate an error if the solver does not return "sat".

    -unsat
        Generate an error if the solver does not return "unsat".

    -show-smtbmc
        Print the output from yosys-smtbmc.

    -specialize
        If the problem is satisfiable, replace each "$anyconst" cell with its
        corresponding constant value from the model produced by the solver.

    -specialize-from-file <solution file>
        Do not run the solver, but instead only attempt to replace each
        "$anyconst" cell in the current module with a constant value provided
        by the specified file.

    -write-solution <solution file>
        If the problem is satisfiable, write the corresponding constant value
        for each "$anyconst" cell from the model produced by the solver to the
        specified file.
```

10.179 ql_bram_merge - Infers QuickLogic k6n10f BRAM pairs that can operate independently

yosys> help **ql_bram_merge**

```
ql_bram_merge [selection]

This pass identifies k6n10f 18K BRAM cells and packs pairs of them together
into a TDP36K cell operating in split mode
```

10.180 ql_bram_types - Change TDP36K type to subtypes

yosys> help **ql_bram_types**

```
ql_bram_types [selection]

This pass changes the type of TDP36K cells to different types based on the
configuration of the cell.
```

10.181 ql_dsp_io_regs - change types of QL_DSP2 depending on configuration

yosys> help **ql_dsp_io_regs**

```
    ql_dsp_io_regs [options] [selection]

This pass looks for QL_DSP2 cells and changes their cell type depending on their
configuration.
```

10.182 ql_dsp_macc - infer QuickLogic multiplier-accumulator DSP cells

yosys> help **ql_dsp_macc**

```
    ql_dsp_macc [selection]

This pass looks for a multiply-accumulate pattern based on which it infers a
QuickLogic DSP cell.
```

10.183 ql_dsp_simd - merge QuickLogic K6N10f DSP pairs to operate in SIMD mode

yosys> help **ql_dsp_simd**

```
    ql_dsp_simd [selection]

This pass identifies K6N10f DSP cells with identical configuration and pack pairs
of them together into other DSP cells that can perform SIMD operation.
```

10.184 ql_ioff - Infer I/O FFs for qlf_k6n10f architecture

yosys> help **ql_ioff**

```
    ql_ioff [selection]

This pass promotes qlf_k6n10f registers directly connected to a top-level I/O
port to I/O FFs.
```

10.185 read - load HDL designs

yosys> help **read**

```
    read {-vlog95|-vlog2k|-sv2005|-sv2009|-sv2012|-sv|-formal} <verilog-file>..

Load the specified Verilog/SystemVerilog files. (Full SystemVerilog support
is only available via Verific.)

Additional -D<macro>[=<value>] options may be added after the option indicating
the language version (and before file names) to set additional verilog defines.
```

(continues on next page)

(continued from previous page)

```
    read {-liberty} <liberty-file>..

Load the specified Liberty files.

    -lib
        only create empty blackbox modules


    read {-f|-F} <command-file>

Load and execute the specified command file.
Check verific command for more information about supported commands in file.


    read -define <macro>[=<value>]..

Set global Verilog/SystemVerilog defines.


    read -undef <macro>..

Unset global Verilog/SystemVerilog defines.


    read -incdir <directory>

Add directory to global Verilog/SystemVerilog include directories.


    read -verific
    read -noverific

Subsequent calls to 'read' will either use or not use Verific. Calling 'read'
with -verific will result in an error on Yosys binaries that are built without
Verific support. The default is to use Verific if it is available.
```

10.186 read_aiger - read AIGER file

yosys> help **read_aiger**

```
    read_aiger [options] [filename]

Load module from an AIGER file into the current design.

    -module_name <module_name>
        name of module to be created (default: <filename>)

    -clk_name <wire_name>
        if specified, AIGER latches to be transformed into $_DFF_P_ cells
        clocked by wire of this name. otherwise, $_FF_ cells will be used
```

(continues on next page)

(continued from previous page)

```
    -map <filename>
        read file with port and latch symbols

    -wideports
        merge ports that match the pattern 'name[int]' into a single
        multi-bit port 'name'

    -xaiger
        read XAIGER extensions
```

10.187 read_blif - read BLIF file

yosys> help **read_blif**

```
    read_blif [options] [filename]

Load modules from a BLIF file into the current design.

    -sop
        Create $sop cells instead of $lut cells

    -wideports
        Merge ports that match the pattern 'name[int]' into a single
        multi-bit port 'name'.
```

10.188 read_json - read JSON file

yosys> help **read_json**

```
    read_json [filename]

Load modules from a JSON file into the current design See "help write_json"
for a description of the file format.
```

10.189 read_liberty - read cells from liberty file

yosys> help **read_liberty**

```
    read_liberty [filename]

Read cells from liberty file as modules into current design.

    -lib
        only create empty blackbox modules

    -wb
        mark imported cells as whiteboxes
```

(continues on next page)

(continued from previous page)

```
    -nooverwrite
        ignore re-definitions of modules. (the default behavior is to
        create an error message if the existing module is not a blackbox
        module, and overwrite the existing module if it is  a blackbox module.)

    -overwrite
        overwrite existing modules with the same name

    -ignore_miss_func
        ignore cells with missing function specification of outputs

    -ignore_miss_dir
        ignore cells with a missing or invalid direction
        specification on a pin

    -ignore_miss_data_latch
        ignore latches with missing data and/or enable pins

    -ignore_buses
        ignore cells with bus interfaces (wide ports)

    -setattr <attribute_name>
        set the specified attribute (to the value 1) on all loaded modules

    -unit_delay
        import combinational timing arcs under the unit delay model
```

10.190 read_rtlil - read modules from RTLIL file

yosys> help **read_rtlil**

```
    read_rtlil [filename]

Load modules from an RTLIL file to the current design. (RTLIL is a text
representation of a design in yosys's internal format.)

    -nooverwrite
        ignore re-definitions of modules. (the default behavior is to
        create an error message if the existing module is not a blackbox
        module, and overwrite the existing module if it is a blackbox module.)

    -overwrite
        overwrite existing modules with the same name

    -lib
        only create empty blackbox modules
```

10.191 read_verilog - read modules from Verilog file

yosys> help **read_verilog**

```
    read_verilog [options] [filename]

Load modules from a Verilog file to the current design. A large subset of
Verilog-2005 is supported.

    -sv
        enable support for SystemVerilog features. (only a small subset
        of SystemVerilog is supported)

    -formal
        enable support for SystemVerilog assertions and some Yosys extensions
        replace the implicit -D SYNTHESIS with -D FORMAL

    -nosynthesis
        don't add implicit -D SYNTHESIS

    -noassert
        ignore assert() statements

    -noassume
        ignore assume() statements

    -norestrict
        ignore restrict() statements

    -assume-asserts
        treat all assert() statements like assume() statements

    -assert-assumes
        treat all assume() statements like assert() statements

    -nodisplay
        suppress output from display system tasks ($display et. al).
        This does not affect the output from a later 'sim' command.

    -debug
        alias for -dump_ast1 -dump_ast2 -dump_vlog1 -dump_vlog2 -yydebug

    -dump_ast1
        dump abstract syntax tree (before simplification)

    -dump_ast2
        dump abstract syntax tree (after simplification)

    -no_dump_ptr
        do not include hex memory addresses in dump (easier to diff dumps)

    -dump_vlog1
        dump ast as Verilog code (before simplification)
```

(continues on next page)

(continued from previous page)

```
-dump_vlog2
    dump ast as Verilog code (after simplification)

-dump_rtlil
    dump generated RTLIL netlist

-yydebug
    enable parser debug output

-nolatches
    usually latches are synthesized into logic loops
    this option prohibits this and sets the output to 'x'
    in what would be the latches hold condition

    this behavior can also be achieved by setting the
    'nolatches' attribute on the respective module or
    always block.

-nomem2reg
    under certain conditions memories are converted to registers
    early during simplification to ensure correct handling of
    complex corner cases. this option disables this behavior.

    this can also be achieved by setting the 'nomem2reg'
    attribute on the respective module or register.

    This is potentially dangerous. Usually the front-end has good
    reasons for converting an array to a list of registers.
    Prohibiting this step will likely result in incorrect synthesis
    results.

-mem2reg
    always convert memories to registers. this can also be
    achieved by setting the 'mem2reg' attribute on the respective
    module or register.

-nomeminit
    do not infer $meminit cells and instead convert initialized
    memories to registers directly in the front-end.

-ppdump
    dump Verilog code after pre-processor

-nopp
    do not run the pre-processor

-nodpi
    disable DPI-C support

-noblackbox
    do not automatically add a (* blackbox *) attribute to an
```

(continues on next page)

(continued from previous page)

```
        empty module.

    -lib
        only create empty blackbox modules. This implies -DBLACKBOX.
        modules with the (* whitebox *) attribute will be preserved.
        (* lib_whitebox *) will be treated like (* whitebox *).

    -nowb
        delete (* whitebox *) and (* lib_whitebox *) attributes from
        all modules.

    -specify
        parse and import specify blocks

    -noopt
        don't perform basic optimizations (such as const folding) in the
        high-level front-end.

    -icells
        interpret cell types starting with '$' as internal cell types

    -pwires
        add a wire for each module parameter

    -nooverwrite
        ignore re-definitions of modules. (the default behavior is to
        create an error message if the existing module is not a black box
        module, and overwrite the existing module otherwise.)

    -overwrite
        overwrite existing modules with the same name

    -defer
        only read the abstract syntax tree and defer actual compilation
        to a later 'hierarchy' command. Useful in cases where the default
        parameters of modules yield invalid or not synthesizable code.

    -noautowire
        make the default of `default_nettype be "none" instead of "wire".

    -setattr <attribute_name>
        set the specified attribute (to the value 1) on all loaded modules

    -Dname[=definition]
        define the preprocessor symbol 'name' and set its optional value
        'definition'

    -Idir
        add 'dir' to the directories which are used when searching include
        files

The command 'verilog_defaults' can be used to register default options for
```

(continues on next page)

(continued from previous page)

```
subsequent calls to 'read_verilog'.

Note that the Verilog frontend does a pretty good job of processing valid
verilog input, but has not very good error reporting. It generally is
recommended to use a simulator (for example Icarus Verilog) for checking
the syntax of the code, rather than to rely on read_verilog for that.

Depending on if read_verilog is run in -formal mode, either the macro
SYNTHESIS or FORMAL is defined automatically, unless -nosynthesis is used.
In addition, read_verilog always defines the macro YOSYS.

See the Yosys README file for a list of non-standard Verilog features
supported by the Yosys Verilog front-end.
```

10.192 read_verilog_file_list - parse a Verilog file list

yosys> help **read_verilog_file_list**

```
    read_verilog_file_list [options]

Parse a Verilog file list, and pass the list of Verilog files to read_verilog
command

    -F file_list_path
        File list file contains list of Verilog files to be parsed, any path is
        treated relative to the file list file

    -f file_list_path
        File list file contains list of Verilog files to be parsed, any path is
        treated relative to current working directroy
```

10.193 read_xaiger2 - (experimental) read XAIGER file

yosys> help **read_xaiger2**

```
    read_xaiger2 -sc_mapping [options] <filename>

Read a standard cell mapping from a XAIGER file into an existing module.

    -module_name <name>
        name of the target module

    -map2 <filename>
        read file with symbol information


WARNING: THE 'read_xaiger2' COMMAND IS EXPERIMENTAL.
```

10.194 recover_names - Execute a lossy mapping command and recover original netnames

yosys> help **recover_names**

```
    recover_names [command]

This pass executes a lossy mapping command and uses a combination of simulation
 to find candidate equivalences and SAT to recover exact original net names.
```

10.195 rename - rename object in the design

yosys> help **rename**

```
    rename old_name new_name

Rename the specified object. Note that selection patterns are not supported
by this command.



    rename -output old_name new_name

Like above, but also make the wire an output. This will fail if the object is
not a wire.


    rename -src [selection]

Assign names auto-generated from the src attribute to all selected wires and
cells with private names.


    rename -wire [selection] [-suffix <suffix>]

Assign auto-generated names based on the wires they drive to all selected
cells with private names. Ignores cells driving privatly named wires.
By default, the cell is named after the wire with the cell type as suffix.
The -suffix option can be used to set the suffix to the given string instead.


    rename -enumerate [-pattern <pattern>] [selection]

Assign short auto-generated names to all selected wires and cells with private
names. The -pattern option can be used to set the pattern for the new names.
The character % in the pattern is replaced with a integer number. The default
pattern is '_%_'.


    rename -witness
```

(continues on next page)

(continued from previous page)

```
Assigns auto-generated names to all $any*/$all* output wires and containing
cells that do not have a public name. This ensures that, during formal
verification, a solver-found trace can be fully specified using a public
hierarchical names.


    rename -hide [selection]

Assign private names (the ones with $-prefix) to all selected wires and cells
with public names. This ignores all selected ports.


    rename -top new_name

Rename top module.


    rename -scramble-name [-seed <seed>] [selection]

Assign randomly-generated names to all selected wires and cells. The seed option
can be used to change the random number generator seed from the default, but it
must be non-zero.
```

10.196 rmports - remove module ports with no connections

yosys> help **rmports**

```
    rmports [selection]

This pass identifies ports in the selected modules which are not used or
driven and removes them.
```

10.197 sat - solve a SAT problem in the circuit

yosys> help **sat**

```
    sat [options] [selection]

This command solves a SAT problem defined over the currently selected circuit
and additional constraints passed as parameters.

    -all
        show all solutions to the problem (this can grow exponentially, use
        -max <N> instead to get <N> solutions)

    -max <N>
        like -all, but limit number of solutions to <N>

    -enable_undef
```

(continues on next page)

(continued from previous page)

```
        enable modeling of undef value (aka 'x-bits')
        this option is implied by -set-def, -set-undef et. cetera

    -max_undef
        maximize the number of undef bits in solutions, giving a better
        picture of which input bits are actually vital to the solution.

    -set <signal> <value>
        set the specified signal to the specified value.

    -set-def <signal>
        add a constraint that all bits of the given signal must be defined

    -set-any-undef <signal>
        add a constraint that at least one bit of the given signal is undefined

    -set-all-undef <signal>
        add a constraint that all bits of the given signal are undefined

    -set-def-inputs
        add -set-def constraints for all module inputs

    -set-def-formal
        add -set-def constraints for formal $anyinit, $anyconst, $anyseq cells

    -show <signal>
        show the model for the specified signal. if no -show option is
        passed then a set of signals to be shown is automatically selected.

    -show-inputs, -show-outputs, -show-ports
        add all module (input/output) ports to the list of shown signals

    -show-regs, -show-public, -show-all
        show all registers, show signals with 'public' names, show all signals

    -ignore_div_by_zero
        ignore all solutions that involve a division by zero

    -ignore_unknown_cells
        ignore all cells that can not be matched to a SAT model

The following options can be used to set up a sequential problem:

    -seq <N>
        set up a sequential problem with <N> time steps. The steps will
        be numbered from 1 to N.

        note: for large <N> it can be significantly faster to use
        -tempinduct-baseonly -maxsteps <N> instead of -seq <N>.

    -set-at <N> <signal> <value>
    -unset-at <N> <signal>
```

(continues on next page)

(continued from previous page)

```
        set or unset the specified signal to the specified value in the
        given timestep. this has priority over a -set for the same signal.

    -set-assumes
        set all assumptions provided via $assume cells

    -set-def-at <N> <signal>
    -set-any-undef-at <N> <signal>
    -set-all-undef-at <N> <signal>
        add undef constraints in the given timestep.

    -set-init <signal> <value>
        set the initial value for the register driving the signal to the value

    -set-init-undef
        set all initial states (not set using -set-init) to undef

    -set-init-def
        do not force a value for the initial state but do not allow undef

    -set-init-zero
        set all initial states (not set using -set-init) to zero

    -dump_vcd <vcd-file-name>
        dump SAT model (counter example in proof) to VCD file

    -dump_json <json-file-name>
        dump SAT model (counter example in proof) to a WaveJSON file.

    -dump_cnf <cnf-file-name>
        dump CNF of SAT problem (in DIMACS format). in temporal induction
        proofs this is the CNF of the first induction step.

The following additional options can be used to set up a proof. If also -seq
is passed, a temporal induction proof is performed.

    -tempinduct
        Perform a temporal induction proof. In a temporal induction proof it is
        proven that the condition holds forever after the number of time steps
        specified using -seq.

    -tempinduct-def
        Perform a temporal induction proof. Assume an initial state with all
        registers set to defined values for the induction step.

    -tempinduct-baseonly
        Run only the basecase half of temporal induction (requires -maxsteps)

    -tempinduct-inductonly
        Run only the induction half of temporal induction

    -tempinduct-skip <N>
```

(continues on next page)

(continued from previous page)

```
        Skip the first <N> steps of the induction proof.

        note: this will assume that the base case holds for <N> steps.
        this must be proven independently with "-tempinduct-baseonly
        -maxsteps <N>". Use -initsteps if you just want to set a
        minimal induction length.

    -prove <signal> <value>
        Attempt to proof that <signal> is always <value>.

    -prove-x <signal> <value>
        Like -prove, but an undef (x) bit in the lhs matches any value on
        the right hand side. Useful for equivalence checking.

    -prove-asserts
        Prove that all asserts in the design hold.

    -prove-skip <N>
        Do not enforce the prove-condition for the first <N> time steps.

    -maxsteps <N>
        Set a maximum length for the induction.

    -initsteps <N>
        Set initial length for the induction.
        This will speed up the search of the right induction length
        for deep induction proofs.

    -stepsize <N>
        Increase the size of the induction proof in steps of <N>.
        This will speed up the search of the right induction length
        for deep induction proofs.

    -timeout <N>
        Maximum number of seconds a single SAT instance may take.

    -verify
        Return an error and stop the synthesis script if the proof fails.

    -verify-no-timeout
        Like -verify but do not return an error for timeouts.

    -falsify
        Return an error and stop the synthesis script if the proof succeeds.

    -falsify-no-timeout
        Like -falsify but do not return an error for timeouts.
```

10.198 scatter - add additional intermediate nets

yosys> help **scatter**

```
    scatter [selection]

This command adds additional intermediate nets on all cell ports. This is used
for testing the correct use of the SigMap helper in passes. If you don't know
what this means: don't worry -- you only need this pass when testing your own
extensions to Yosys.

Use the opt_clean command to get rid of the additional nets.
```

10.199 scc - detect strongly connected components (logic loops)

yosys> help **scc**

```
    scc [options] [selection]

This command identifies strongly connected components (aka logic loops) in the
design.

    -expect <num>
        expect to find exactly <num> SCCs. A different number of SCCs will
        produce an error.

    -max_depth <num>
        limit to loops not longer than the specified number of cells. This
        can e.g. be useful in identifying small local loops in a module that
        implements one large SCC.

    -nofeedback
        do not count cells that have their output fed back into one of their
        inputs as single-cell scc.

    -all_cell_types
        Usually this command only considers internal non-memory cells. With
        this option set, all cells are considered. For unknown cells all ports
        are assumed to be bidirectional 'inout' ports.

    -set_attr <name> <value>
        set the specified attribute on all cells that are part of a logic
        loop. the special token {} in the value is replaced with a unique
        identifier for the logic loop.

    -select
        replace the current selection with a selection of all cells and wires
        that are part of a found logic loop

    -specify
        examine specify rules to detect logic loops in whitebox/blackbox cells
```

10.200 scratchpad - get/set values in the scratchpad

yosys> help **scratchpad**

```
    scratchpad [options]

This pass allows to read and modify values from the scratchpad of the current
design. Options:

    -get <identifier>
        print the value saved in the scratchpad under the given identifier.

    -set <identifier> <value>
        save the given value in the scratchpad under the given identifier.

    -unset <identifier>
        remove the entry for the given identifier from the scratchpad.

    -copy <identifier_from> <identifier_to>
        copy the value of the first identifier to the second identifier.

    -assert <identifier> <value>
        assert that the entry for the given identifier is set to the given
        value.

    -assert-set <identifier>
        assert that the entry for the given identifier exists.

    -assert-unset <identifier>
        assert that the entry for the given identifier does not exist.

The identifier may not contain whitespace. By convention, it is usually prefixed
by the name of the pass that uses it, e.g. 'opt.did_something'. If the value
contains whitespace, it must be enclosed in double quotes.
```

10.201 script - execute commands from file or wire

yosys> help **script**

```
    script <filename> [<from_label>:<to_label>]
    script -scriptwire [selection]

This command executes the yosys commands in the specified file (default
behaviour), or commands embedded in the constant text value connected to the
selected wires.

In the default (file) case, the 2nd argument can be used to only execute the
section of the file between the specified labels. An empty from label is
synonymous with the beginning of the file and an empty to label is synonymous
with the end of the file.

If only one label is specified (without ':') then only the block
```

(continues on next page)

(continued from previous page)

```
marked with that label (until the next label) is executed.

In "-scriptwire" mode, the commands on the selected wire(s) will be executed
in the scope of (and thus, relative to) the wires' owning module(s). This
'-module' mode can be exited by using the 'cd' command.
```

10.202 select - modify and view the list of selected objects

yosys> help **select**

```
    select [ -add | -del | -set <name> ] {-read <filename> | <selection>}
    select [ -unset <name> ]
    select [ <assert_option> ] {-read <filename> | <selection>}
    select [ -list | -list-mod | -write <filename> | -count | -clear ]
    select -module <modname>

Most commands use the list of currently selected objects to determine which part
of the design to operate on. This command can be used to modify and view this
list of selected objects.

Note that many commands support an optional [selection] argument that can be
used to override the global selection for the command. The syntax of this
optional argument is identical to the syntax of the <selection> argument
described here.

    -add, -del
        add or remove the given objects to the current selection.
        without this options the current selection is replaced.

    -set <name>
        do not modify the current selection. instead save the new selection
        under the given name (see @<name> below). to save the current selection,
        use "select -set <name> %"

    -unset <name>
        do not modify the current selection. instead remove a previously saved
        selection under the given name (see @<name> below).

    -assert-none
        do not modify the current selection. instead assert that the given
        selection is empty. i.e. produce an error if any object or module
        matching the selection is found.

    -assert-any
        do not modify the current selection. instead assert that the given
        selection is non-empty. i.e. produce an error if no object or module
        matching the selection is found.

    -assert-mod-count N
        do not modify the current selection. instead assert that the given
        selection contains exactly N modules (partially or fully selected).
```

(continues on next page)

(continued from previous page)

```
    -assert-count N
        do not modify the current selection. instead assert that the given
        selection contains exactly N objects.

    -assert-max N
        do not modify the current selection. instead assert that the given
        selection contains less than or exactly N objects.

    -assert-min N
        do not modify the current selection. instead assert that the given
        selection contains at least N objects.

    -list
        list all objects in the current selection

    -write <filename>
        like -list but write the output to the specified file

    -read <filename>
        read the specified file (written by -write)

    -count
        count all objects in the current selection

    -clear
        clear the current selection. this effectively selects the whole
        design. it also resets the selected module (see -module). use the
        command 'select *' to select everything but stay in the current module.

    -none
        create an empty selection. the current module is unchanged.

    -module <modname>
        limit the current scope to the specified module.
        the difference between this and simply selecting the module
        is that all object names are interpreted relative to this
        module after this command until the selection is cleared again.

When this command is called without an argument, the current selection
is displayed in a compact form (i.e. only the module name when a whole module
is selected).

The <selection> argument itself is a series of commands for a simple stack
machine. Each element on the stack represents a set of selected objects.
After this commands have been executed, the union of all remaining sets
on the stack is computed and used as selection for the command.

Pushing (selecting) object when not in -module mode:

    <mod_pattern>
        select the specified module(s)
```

(continues on next page)

(continued from previous page)

```
    <mod_pattern>/<obj_pattern>
        select the specified object(s) from the module(s)

Pushing (selecting) object when in -module mode:

    <obj_pattern>
        select the specified object(s) from the current module

By default, patterns will not match black/white-box modules or their
contents. To include such objects, prefix the pattern with '='.

A <mod_pattern> can be a module name, wildcard expression (*, ?, [..])
matching module names, or one of the following:

    A:<pattern>, A:<pattern>=<pattern>
        all modules with an attribute matching the given pattern
        in addition to = also <, <=, >=, and > are supported

    N:<pattern>
        all modules with a name matching the given pattern
        (i.e. 'N:' is optional as it is the default matching rule)

An <obj_pattern> can be an object name, wildcard expression, or one of
the following:

    w:<pattern>
        all wires with a name matching the given wildcard pattern

    i:<pattern>, o:<pattern>, x:<pattern>
        all inputs (i:), outputs (o:) or any ports (x:) with matching names

    s:<size>, s:<min>:<max>
        all wires with a matching width

    m:<pattern>
        all memories with a name matching the given pattern

    c:<pattern>
        all cells with a name matching the given pattern

    t:<pattern>
        all cells with a type matching the given pattern

    t:@<name>
        all cells with a type matching a module in the saved selection <name>

    p:<pattern>
        all processes with a name matching the given pattern

    a:<pattern>
        all objects with an attribute name matching the given pattern
```

(continues on next page)

(continued from previous page)

```
    a:<pattern>=<pattern>
        all objects with a matching attribute name-value-pair.
        in addition to = also <, <=, >=, and > are supported

    r:<pattern>, r:<pattern>=<pattern>
        cells with matching parameters. also with <, <=, >= and >.

    n:<pattern>
        all objects with a name matching the given pattern
        (i.e. 'n:' is optional as it is the default matching rule)

    @<name>
        push the selection saved prior with 'select -set <name> ...'

The following actions can be performed on the top sets on the stack:

    %
        push a copy of the current selection to the stack

    %%
        replace the stack with a union of all elements on it

    %n
        replace top set with its invert

    %u
        replace the two top sets on the stack with their union

    %i
        replace the two top sets on the stack with their intersection

    %d
        pop the top set from the stack and subtract it from the new top

    %D
        like %d but swap the roles of two top sets on the stack

    %c
        create a copy of the top set from the stack and push it

    %x[<num1>|*][.<num2>][:<rule>[:<rule>..]]
        expand top set <num1> num times according to the specified rules.
        (i.e. select all cells connected to selected wires and select all
        wires connected to selected cells) The rules specify which cell
        ports to use for this. the syntax for a rule is a '-' for exclusion
        and a '+' for inclusion, followed by an optional comma separated
        list of cell types followed by an optional comma separated list of
        cell ports in square brackets. a rule can also be just a cell or wire
        name that limits the expansion (is included but does not go beyond).
        select at most <num2> objects. a warning message is printed when this
        limit is reached. When '*' is used instead of <num1> then the process
```

(continues on next page)

(continued from previous page)

```
        is repeated until no further object are selected.

    %ci[<num1>|*][.<num2>][:<rule>[:<rule>..]]
    %co[<num1>|*][.<num2>][:<rule>[:<rule>..]]
        similar to %x, but only select input (%ci) or output cones (%co)

    %xe[...] %cie[...] %coe
        like %x, %ci, and %co but only consider combinatorial cells

    %a
        expand top set by selecting all wires that are (at least in part)
        aliases for selected wires.

    %s
        expand top set by adding all modules that implement cells in selected
        modules

    %m
        expand top set by selecting all modules that contain selected objects

    %M
        select modules that implement selected cells

    %C
        select cells that implement selected modules

    %R[<num>]
        select <num> random objects from top selection (default 1)

Example: the following command selects all wires that are connected to a
'GATE' input of a 'SWITCH' cell:

    select */t:SWITCH %x:+[GATE] */t:SWITCH %d
```

10.203 setattr - set/unset attributes on objects

yosys> help **setattr**

```
    setattr [ -mod ] [ -set name value | -unset name ]... [selection]

Set/unset the given attributes on the selected objects. String values must be
passed in double quotes (").

When called with -mod, this command will set and unset attributes on modules
instead of objects within modules.
```

10.204 setenv - set an environment variable

yosys> help **setenv**

```
    setenv name value

Set the given environment variable on the current process. Values containing
whitespace must be passed in double quotes (").
```

10.205 setparam - set/unset parameters on objects

yosys> help **setparam**

```
    setparam [ -type cell_type ] [ -set name value | -unset name ]... [selection]

Set/unset the given parameters on the selected cells. String values must be
passed in double quotes (").

The -type option can be used to change the cell type of the selected cells.
```

10.206 setundef - replace undef values with defined constants

yosys> help **setundef**

```
    setundef [options] [selection]

This command replaces undef (x) constants with defined (0/1) constants.

    -undriven
        also set undriven nets to constant values

    -expose
        also expose undriven nets as inputs (use with -undriven)

    -zero
        replace with bits cleared (0)

    -one
        replace with bits set (1)

    -undef
        replace with undef (x) bits, may be used with -undriven

    -anyseq
        replace with $anyseq drivers (for formal)

    -anyconst
        replace with $anyconst drivers (for formal)

    -random <seed>
```

(continues on next page)

(continued from previous page)

```
        replace with random bits using the specified integer as seed
        value for the random number generator.

    -init
        also create/update init values for flip-flops

    -params
        replace undef in cell parameters
```

10.207 share - perform sat-based resource sharing

yosys> help **share**

```
    share [options] [selection]

This pass merges shareable resources into a single resource. A SAT solver
is used to determine if two resources are share-able.

  -force
    Per default the selection of cells that is considered for sharing is
    narrowed using a list of cell types. With this option all selected
    cells are considered for resource sharing.

    IMPORTANT NOTE: If the -all option is used then no cells with internal
    state must be selected!

  -aggressive
    Per default some heuristics are used to reduce the number of cells
    considered for resource sharing to only large resources. This options
    turns this heuristics off, resulting in much more cells being considered
    for resource sharing.

  -fast
    Only consider the simple part of the control logic in SAT solving, resulting
    in much easier SAT problems at the cost of maybe missing some opportunities
    for resource sharing.

  -limit N
    Only perform the first N merges, then stop. This is useful for debugging.

  -pattern-limit N
    Only analyze up to N activation patterns per cell, otherwise assume active.
    N is 1000 by default. Higher values may merge more resources at the cost of
    more runtime and memory consumption.
```

10.208 shell - enter interactive command mode

yosys> help **shell**

```
    shell

This command enters the interactive command mode. This can be useful
in a script to interrupt the script at a certain point and allow for
interactive inspection or manual synthesis of the design at this point.

The command prompt of the interactive shell indicates the current
selection (see 'help select'):

    yosys>
        the entire design is selected

    yosys*>
        only part of the design is selected

    yosys [modname]>
        the entire module 'modname' is selected using 'select -module modname'

    yosys [modname]*>
        only part of current module 'modname' is selected

When in interactive shell, some errors (e.g. invalid command arguments)
do not terminate yosys but return to the command prompt.

This command is the default action if nothing else has been specified
on the command line.

Press Ctrl-D or type 'exit' to leave the interactive shell.
```

10.209 show - generate schematics using graphviz

yosys> help **show**

```
    show [options] [selection]

Create a graphviz DOT file for the selected part of the design and compile it
to a graphics file (usually SVG or PostScript).

    -viewer <viewer>
        Run the specified command with the graphics file as parameter.
        On Windows, this pauses yosys until the viewer exits.
        Use "-viewer none" to not run any command.

    -format <format>
        Generate a graphics file in the specified format. Use 'dot' to just
        generate a .dot file, or other <format> strings such as 'svg' or 'ps'
        to generate files in other formats (this calls the 'dot' command).

    -lib <verilog_or_rtlil_file>
        Use the specified library file for determining whether cell ports are
        inputs or outputs. This option can be used multiple times to specify
```

(continues on next page)

(continued from previous page)

```
    more than one library.

    note: in most cases it is better to load the library before calling
    show with 'read_verilog -lib <filename>'. it is also possible to
    load liberty files with 'read_liberty -lib <filename>'.

-prefix <prefix>
    generate <prefix>.* instead of ~/.yosys_show.*

-color <color> <object>
    assign the specified color to the specified object. The object can be
    a single selection wildcard expressions or a saved set of objects in
    the @<name> syntax (see "help select" for details).

-label <text> <object>
    assign the specified label text to the specified object. The object can
    be a single selection wildcard expressions or a saved set of objects in
    the @<name> syntax (see "help select" for details).

-colors <seed>
    Randomly assign colors to the wires. The integer argument is the seed
    for the random number generator. Change the seed value if the colored
    graph still is ambiguous. A seed of zero deactivates the coloring.

-colorattr <attribute_name>
    Use the specified attribute to assign colors. A unique color is
    assigned to each unique value of this attribute.

-width
    annotate buses with a label indicating the width of the bus.

-signed
    mark ports (A, B) that are declared as signed (using the [AB]_SIGNED
    cell parameter) with an asterisk next to the port name.

-stretch
    stretch the graph so all inputs are on the left side and all outputs
    (including inout ports) are on the right side.

-pause
    wait for the user to press enter to before returning

-enum
    enumerate objects with internal ($-prefixed) names

-long
    do not abbreviate objects with internal ($-prefixed) names

-notitle
    do not add the module name as graph title to the dot file

-nobg
```

(continues on next page)

(continued from previous page)

```
        don't run viewer in the background, IE wait for the viewer tool to
        exit before returning

    -href
        adds href attribute to all items representing cells and wires, using
        src attribute of origin

When no <format> is specified, 'dot' is used. When no <format> and <viewer> is
specified, 'xdot' is used to display the schematic (POSIX systems only).

The generated output files are '~/.yosys_show.dot' and '~/.yosys_show.<format>',
unless another prefix is specified using -prefix <prefix>.

Yosys on Windows and YosysJS use different defaults: The output is written
to 'show.dot' in the current directory and new viewer is launched each time
the 'show' command is executed.
```

10.210 shregmap - map shift registers

yosys> help **shregmap**

```
    shregmap [options] [selection]

This pass converts chains of $_DFF_[NP]_ gates to target specific shift register
primitives. The generated shift register will be of type $__SHREG_DFF_[NP]_ and
will use the same interface as the original $_DFF_*_ cells. The cell parameter
'DEPTH' will contain the depth of the shift register. Use a target-specific
'techmap' map file to convert those cells to the actual target cells.

    -minlen N
        minimum length of shift register (default = 2)
        (this is the length after -keep_before and -keep_after)

    -maxlen N
        maximum length of shift register (default = no limit)
        larger chains will be mapped to multiple shift register instances

    -keep_before N
        number of DFFs to keep before the shift register (default = 0)

    -keep_after N
        number of DFFs to keep after the shift register (default = 0)

    -clkpol pos|neg|any
        limit match to only positive or negative edge clocks. (default = any)

    -enpol pos|neg|none|any_or_none|any
        limit match to FFs with the specified enable polarity. (default = none)

    -match <cell_type>[:<d_port_name>:<q_port_name>]
        match the specified cells instead of $_DFF_N_ and $_DFF_P_. If
```

(continues on next page)

(continued from previous page)

```
        ':<d_port_name>:<q_port_name>' is omitted then 'D' and 'Q' is used
        by default. E.g. the option '-clkpol pos' is just an alias for
        '-match $_DFF_P_', which is an alias for '-match $_DFF_P_:D:Q'.

    -params
        instead of encoding the clock and enable polarity in the cell name by
        deriving from the original cell name, simply name all generated cells
        $__SHREG_ and use CLKPOL and ENPOL parameters. An ENPOL value of 2 is
        used to denote cells without enable input. The ENPOL parameter is
        omitted when '-enpol none' (or no -enpol option) is passed.

    -zinit
        assume the shift register is automatically zero-initialized, so it
        becomes legal to merge zero initialized FFs into the shift register.

    -init
        map initialized registers to the shift reg, add an INIT parameter to
        generated cells with the initialization value. (first bit to shift out
        in LSB position)

    -tech greenpak4
        map to greenpak4 shift registers.
```

10.211 sim - simulate the circuit

yosys> help **sim**

```
    sim [options] [top-level]

This command simulates the circuit using the given top-level module.

    -vcd <filename>
        write the simulation results to the given VCD file

    -fst <filename>
        write the simulation results to the given FST file

    -aiw <filename>
        write the simulation results to an AIGER witness file
        (requires a *.aim file via -map)

    -hdlname
        use the hdlname attribute when writing simulation results
        (preserves hierarchy in a flattened design)

    -x
        ignore constant x outputs in simulation file.

    -date
        include date and full version info in output.
```

(continues on next page)

(continued from previous page)

```
    -clock <portname>
        name of top-level clock input

    -clockn <portname>
        name of top-level clock input (inverse polarity)

    -multiclock
        mark that witness file is multiclock.

    -reset <portname>
        name of top-level reset input (active high)

    -resetn <portname>
        name of top-level inverted reset input (active low)

    -rstlen <integer>
        number of cycles reset should stay active (default: 1)

    -zinit
        zero-initialize all uninitialized regs and memories

    -timescale <string>
        include the specified timescale declaration in the vcd

    -n <integer>
        number of clock cycles to simulate (default: 20)

    -noinitstate
        do not activate $initstate cells during the first cycle

    -a
        use all nets in VCD/FST operations, not just those with public names

    -w
        writeback mode: use final simulation state as new init state

    -r <filename>
        read simulation or formal results file
            File formats supported: FST, VCD, AIW, WIT and .yw
            VCD support requires vcd2fst external tool to be present

    -append <integer>
        number of extra clock cycles to simulate for a Yosys witness input

    -summary <filename>
        write a JSON summary to the given file

    -map <filename>
        read file with port and latch symbols, needed for AIGER witness input

    -scope <name>
        scope of simulation top model
```

(continues on next page)

(continued from previous page)

```
    -at <time>
        sets start and stop time

    -start <time>
        start co-simulation in arbitary time (default 0)

    -stop <time>
        stop co-simulation in arbitary time (default END)

    -sim
        simulation with stimulus from FST (default)

    -sim-cmp
        co-simulation expect exact match

    -sim-gold
        co-simulation, x in simulation can match any value in FST

    -sim-gate
        co-simulation, x in FST can match any value in simulation

    -assert
        fail the simulation command if, in the course of simulating,
        any of the asserts in the design fail

    -fst-noinit
        do not initialize latches and memories from an input FST or VCD file
        (use the initial defined by the design instead)

    -q
        disable per-cycle/sample log message

    -d
        enable debug output
```

10.212 simplemap - mapping simple coarse-grain cells

yosys> help **simplemap**

```
    simplemap [selection]

This pass maps a small selection of simple coarse-grain cells to yosys gate
primitives. The following internal cell types are mapped by this pass:

  $not, $pos, $and, $or, $xor, $xnor
  $reduce_and, $reduce_or, $reduce_xor, $reduce_xnor, $reduce_bool
  $logic_not, $logic_and, $logic_or, $mux, $tribuf
  $sr, $ff, $dff, $dffe, $dffsr, $dffsre, $adff, $adffe, $aldff, $aldffe, $sdff,
  $sdffe, $sdffce, $dlatch, $adlatch, $dlatchsr
```

10.213 splice - create explicit splicing cells

yosys> help **splice**

```
    splice [options] [selection]

This command adds $slice and $concat cells to the design to make the splicing
of multi-bit signals explicit. This for example is useful for coarse grain
synthesis, where dedicated hardware is needed to splice signals.

    -sel_by_cell
        only select the cell ports to rewire by the cell. if the selection
        contains a cell, than all cell inputs are rewired, if necessary.

    -sel_by_wire
        only select the cell ports to rewire by the wire. if the selection
        contains a wire, than all cell ports driven by this wire are wired,
        if necessary.

    -sel_any_bit
        it is sufficient if the driver of any bit of a cell port is selected.
        by default all bits must be selected.

    -wires
        also add $slice and $concat cells to drive otherwise unused wires.

    -no_outputs
        do not rewire selected module outputs.

    -port <name>
        only rewire cell ports with the specified name. can be used multiple
        times. implies -no_output.

    -no_port <name>
        do not rewire cell ports with the specified name. can be used multiple
        times. can not be combined with -port <name>.

By default selected output wires and all cell ports of selected cells driven
by selected wires are rewired.
```

10.214 splitcells - split up multi-bit cells

yosys> help **splitcells**

```
    splitcells [options] [selection]

This command splits multi-bit cells into smaller chunks, based on usage of the
cell output bits.

This command operates only in cells such as $or, $and, and $mux, that are easily
cut into bit-slices.
```

(continues on next page)

(continued from previous page)

```
    -format char1[char2[char3]]
        the first char is inserted between the cell name and the bit index, the
        second char is appended to the cell name. e.g. -format () creates cell
        names like 'mycell(42)'. the 3rd character is the range separation
        character when creating multi-bit cells. the default is '[]:'.
```

10.215 splitnets - split up multi-bit nets

yosys> help **splitnets**

```
    splitnets [options] [selection]

This command splits multi-bit nets into single-bit nets.

    -format char1[char2[char3]]
        the first char is inserted between the net name and the bit index, the
        second char is appended to the netname. e.g. -format () creates net
        names like 'mysignal(42)'. the 3rd character is the range separation
        character when creating multi-bit wires. the default is '[]:'.

    -ports
        also split module ports. per default only internal signals are split.

    -driver
        don't blindly split nets in individual bits. instead look at the driver
        and split nets so that no driver drives only part of a net.
```

10.216 sta - perform static timing analysis

yosys> help **sta**

```
    sta [options] [selection]

This command performs static timing analysis on the design. (Only considers
paths within a single module, so the design must be flattened.)
```

10.217 stat - print some statistics

yosys> help **stat**

```
    stat [options] [selection]

Print some statistics (number of objects) on the selected portion of the
design.

    -top <module>
        print design hierarchy with this module as top. if the design is fully
        selected and a module has the 'top' attribute set, this module is used
```

(continues on next page)

(continued from previous page)

```
        default value for this option.

    -liberty <liberty_file>
        use cell area information from the provided liberty file

    -tech <technology>
        print area estimate for the specified technology. Currently supported
        values for <technology>: xilinx, cmos

    -width
        annotate internal cell types with their word width.
        e.g. $add_8 for an 8 bit wide $add cell.

    -json
        output the statistics in a machine-readable JSON format.
        this is output to the console; use "tee" to output to a file.
```

10.218 submod - moving part of a module to a new submodule

yosys> help **submod**

```
    submod [options] [selection]

This pass identifies all cells with the 'submod' attribute and moves them to
a newly created module. The value of the attribute is used as name for the
cell that replaces the group of cells with the same attribute value.

This pass can be used to create a design hierarchy in flat design. This can
be useful for analyzing or reverse-engineering a design.

This pass only operates on completely selected modules with no processes
or memories.

    -copy
        by default the cells are 'moved' from the source module and the source
        module will use an instance of the new module after this command is
        finished. call with -copy to not modify the source module.

    -name <name>
        don't use the 'submod' attribute but instead use the selection. only
        objects from one module might be selected. the value of the -name option
        is used as the value of the 'submod' attribute instead.

    -hidden
        instead of creating submodule ports with public names, create ports with
        private names so that a subsequent 'flatten; clean' call will restore
        the original module with original public names.
```

10.219 supercover - add hi/lo cover cells for each wire bit

yosys> help **supercover**

```
    supercover [options] [selection]

This command adds two cover cells for each bit of each selected wire, one
checking for a hi signal level and one checking for lo level.
```

10.220 synth - generic synthesis script

yosys> help **synth**

```
    synth [options]

This command runs the default synthesis script. This command does not operate
on partly selected designs.

    -top <module>
        use the specified module as top module (default='top')

    -auto-top
        automatically determine the top of the design hierarchy

    -flatten
        flatten the design before synthesis. this will pass '-auto-top' to
        'hierarchy' if no top module is specified.

    -encfile <file>
        passed to 'fsm_recode' via 'fsm'

    -lut <k>
        perform synthesis for a k-LUT architecture.

    -nofsm
        do not run FSM optimization

    -noabc
        do not run abc (as if yosys was compiled without ABC support)

    -booth
        run the booth pass to map $mul to Booth encoded multipliers

    -noalumacc
        do not run 'alumacc' pass. i.e. keep arithmetic operators in
        their direct form ($add, $sub, etc.).

    -nordff
        passed to 'memory'. prohibits merging of FFs into memory read ports

    -noshare
        do not run SAT-based resource sharing
```

(continues on next page)

(continued from previous page)

```
    -run <from_label>[:<to_label>]
        only run the commands between the labels (see below). an empty
        from label is synonymous to 'begin', and empty to label is
        synonymous to the end of the command list.

    -abc9
        use new ABC9 flow (EXPERIMENTAL)

    -flowmap
        use FlowMap LUT techmapping instead of ABC

    -no-rw-check
        marks all recognized read ports as "return don't-care value on
        read/write collision" (same result as setting the no_rw_check
        attribute on all memories).

    -extra-map filename
        source extra rules from the given file to complement the default
        mapping library in the `techmap` step. this option can be
        repeated.

The following commands are executed by this synthesis command:

    begin:
        hierarchy -check [-top <top> | -auto-top]

    coarse:
        proc
        flatten      (if -flatten)
        opt_expr
        opt_clean
        check
        opt -nodffe -nosdff
        fsm          (unless -nofsm)
        opt
        wreduce
        peepopt
        opt_clean
        techmap -map +/cmp2lut.v -map +/cmp2lcu.v     (if -lut)
        booth        (if -booth)
        alumacc      (unless -noalumacc)
        share        (unless -noshare)
        opt
        memory -nomap
        opt_clean

    fine:
        opt -fast -full
        memory_map
        opt -full
        techmap                      (unless -extra-map)
```

(continues on next page)

(continued from previous page)

```
        techmap -map +/techmap.v -map <inject>      (if -extra-map)
        techmap -map +/gate2lut.v    (if -noabc and -lut)
        clean; opt_lut               (if -noabc and -lut)
        flowmap -maxlut K            (if -flowmap and -lut)
        opt -fast
        abc -fast           (unless -noabc, unless -lut)
        abc -fast -lut k    (unless -noabc, if -lut)
        opt -fast           (unless -noabc)

    check:
        hierarchy -check
        stat
        check
```

10.221 synth_achronix - synthesis for Achronix Speedster22i FPGAs.

yosys> help **synth_achronix**

```
    synth_achronix [options]

This command runs synthesis for Achronix Speedster eFPGAs. This work is still␣
↪experimental.

    -top <module>
        use the specified module as top module (default='top')

    -vout <file>
        write the design to the specified Verilog netlist file. writing of an
        output file is omitted if this parameter is not specified.

    -run <from_label>:<to_label>
        only run the commands between the labels (see below). an empty
        from label is synonymous to 'begin', and empty to label is
        synonymous to the end of the command list.

    -noflatten
        do not flatten design before synthesis

    -retime
        run 'abc' with '-dff -D 1' options


The following commands are executed by this synthesis command:

    begin:
        read_verilog -sv -lib +/achronix/speedster22i/cells_sim.v
        hierarchy -check -top <top>

    flatten:    (unless -noflatten)
        proc
        flatten
```

(continues on next page)

(continued from previous page)

```
        tribuf -logic
        deminout

    coarse:
        synth -run coarse

    fine:
        opt -fast -mux_undef -undriven -fine -full
        memory_map
        opt -undriven -fine
        opt -fine
        techmap -map +/techmap.v
        opt -full
        clean -purge
        setundef -undriven -zero
        dfflegalize -cell $_DFF_P_ x
        abc -markgroups -dff -D 1    (only if -retime)

    map_luts:
        abc -lut 4
        clean

    map_cells:
        iopadmap -bits -outpad $__outpad I:O -inpad $__inpad O:I
        techmap -map +/achronix/speedster22i/cells_map.v
        clean -purge

    check:
        hierarchy -check
        stat
        check -noinit
        blackbox =A:whitebox

    vout:
        write_verilog -nodec -attr2comment -defparam -renameprefix syn_ <file-name>
```

10.222 synth_anlogic - synthesis for Anlogic FPGAs

yosys> help **synth_anlogic**

```
    synth_anlogic [options]

This command runs synthesis for Anlogic FPGAs.

    -top <module>
        use the specified module as top module

    -edif <file>
        write the design to the specified EDIF file. writing of an output file
        is omitted if this parameter is not specified.
```

(continues on next page)

(continued from previous page)

```
    -json <file>
        write the design to the specified JSON file. writing of an output file
        is omitted if this parameter is not specified.

    -run <from_label>:<to_label>
        only run the commands between the labels (see below). an empty
        from label is synonymous to 'begin', and empty to label is
        synonymous to the end of the command list.

    -noflatten
        do not flatten design before synthesis

    -retime
        run 'abc' with '-dff -D 1' options

    -nolutram
        do not use EG_LOGIC_DRAM16X4 cells in output netlist

    -nobram
        do not use EG_PHY_BRAM or EG_PHY_BRAM32K cells in output netlist


The following commands are executed by this synthesis command:

    begin:
        read_verilog -lib +/anlogic/cells_sim.v +/anlogic/eagle_bb.v
        hierarchy -check -top <top>

    flatten:    (unless -noflatten)
        proc
        flatten
        tribuf -logic
        deminout

    coarse:
        synth -run coarse

    map_ram:
        memory_libmap -lib +/anlogic/lutrams.txt -lib +/anlogic/brams.txt [-no-auto-
↪block] [-no-auto-distributed]    (-no-auto-block if -nobram, -no-auto-distributed if -
↪nolutram)
        techmap -map +/anlogic/lutrams_map.v -map +/anlogic/brams_map.v

    map_ffram:
        opt -fast -mux_undef -undriven -fine
        memory_map
        opt -undriven -fine

    map_gates:
        techmap -map +/techmap.v -map +/anlogic/arith_map.v
        opt -fast
        abc -dff -D 1    (only if -retime)
```

(continues on next page)

(continued from previous page)

```
    map_ffs:
        dfflegalize -cell $_DFFE_P??P_ r -cell $_SDFFE_P??P_ r -cell $_DLATCH_N??_ r
        techmap -D NO_LUT -map +/anlogic/cells_map.v
        opt_expr -mux_undef
        simplemap

    map_luts:
        abc -lut 4:6
        clean

    map_cells:
        techmap -map +/anlogic/cells_map.v
        clean

    map_anlogic:
        anlogic_fixcarry
        anlogic_eqn

    check:
        hierarchy -check
        stat
        check -noinit
        blackbox =A:whitebox

    edif:
        write_edif <file-name>

    json:
        write_json <file-name>
```

10.223 synth_coolrunner2 - synthesis for Xilinx Coolrunner-II CPLDs

yosys> help **synth_coolrunner2**

```
    synth_coolrunner2 [options]

This command runs synthesis for Coolrunner-II CPLDs. This work is experimental.
It is intended to be used with https://github.com/azonenberg/openfpga as the
place-and-route.

    -top <module>
        use the specified module as top module (default='top')

    -json <file>
        write the design to the specified JSON file. writing of an output file
        is omitted if this parameter is not specified.

    -run <from_label>:<to_label>
        only run the commands between the labels (see below). an empty
        from label is synonymous to 'begin', and empty to label is
```

(continues on next page)

(continued from previous page)

```
        synonymous to the end of the command list.

    -noflatten
        do not flatten design before synthesis

    -retime
        run 'abc' with '-dff -D 1' options


The following commands are executed by this synthesis command:

    begin:
        read_verilog -lib +/coolrunner2/cells_sim.v
        hierarchy -check -top <top>

    flatten:    (unless -noflatten)
        proc
        flatten
        tribuf -logic

    coarse:
        synth -run coarse

    fine:
        extract_counter -dir up -allow_arst no
        techmap -map +/coolrunner2/cells_counter_map.v
        clean
        opt -fast -full
        techmap -map +/techmap.v -map +/coolrunner2/cells_latch.v
        opt -fast
        dfflibmap -prepare -liberty +/coolrunner2/xc2_dff.lib

    map_tff:
        abc -g AND,XOR
        clean
        extract -map +/coolrunner2/tff_extract.v

    map_pla:
        abc -sop -I 40 -P 56
        clean

    map_cells:
        dfflibmap -liberty +/coolrunner2/xc2_dff.lib
        dffinit -ff FDCP Q INIT
        dffinit -ff FDCP_N Q INIT
        dffinit -ff FTCP Q INIT
        dffinit -ff FTCP_N Q INIT
        dffinit -ff LDCP Q INIT
        dffinit -ff LDCP_N Q INIT
        coolrunner2_sop
        clean
        iopadmap -bits -inpad IBUF O:I -outpad IOBUFE I:IO -inoutpad IOBUFE O:IO -
```

(continues on next page)

(continued from previous page)

```
↪toutpad IOBUFE E:I:IO -tinoutpad IOBUFE E:O:I:IO
        attrmvcp -attr src -attr LOC t:IOBUFE n:*
        attrmvcp -attr src -attr LOC -driven t:IBUF n:*
        coolrunner2_fixup
        splitnets
        clean

    check:
        hierarchy -check
        stat
        check -noinit
        blackbox =A:whitebox

    json:
        write_json <file-name>
```

10.224 synth_easic - synthesis for eASIC platform

yosys> help **synth_easic**

```
    synth_easic [options]

This command runs synthesis for eASIC platform.

    -top <module>
        use the specified module as top module

    -vlog <file>
        write the design to the specified structural Verilog file. writing of
        an output file is omitted if this parameter is not specified.

    -etools <path>
        set path to the eTools installation. (default=/opt/eTools)

    -run <from_label>:<to_label>
        only run the commands between the labels (see below). an empty
        from label is synonymous to 'begin', and empty to label is
        synonymous to the end of the command list.

    -noflatten
        do not flatten design before synthesis

    -retime
        run 'abc' with '-dff -D 1' options


The following commands are executed by this synthesis command:

    begin:
        read_liberty -lib <etools_phys_clk_lib>
        read_liberty -lib <etools_logic_lut_lib>
```

(continues on next page)

(continued from previous page)

```
        hierarchy -check -top <top>

    flatten:    (unless -noflatten)
        proc
        flatten

    coarse:
        synth -run coarse

    fine:
        opt -fast -mux_undef -undriven -fine
        memory_map
        opt -undriven -fine
        techmap
        opt -fast
        abc -dff -D 1     (only if -retime)
        opt_clean    (only if -retime)

    map:
        dfflibmap -liberty <etools_phys_clk_lib>
        abc -liberty <etools_logic_lut_lib>
        opt_clean

    check:
        hierarchy -check
        stat
        check -noinit
        blackbox =A:whitebox

    vlog:
        write_verilog -noexpr -attr2comment <file-name>
```

10.225 synth_ecp5 - synthesis for ECP5 FPGAs

yosys> help **synth_ecp5**

```
    synth_ecp5 [options]

This command runs synthesis for ECP5 FPGAs.

    -top <module>
        use the specified module as top module

    -blif <file>
        write the design to the specified BLIF file. writing of an output file
        is omitted if this parameter is not specified.

    -edif <file>
        write the design to the specified EDIF file. writing of an output file
        is omitted if this parameter is not specified.
```

(continues on next page)

(continued from previous page)

```
    -json <file>
        write the design to the specified JSON file. writing of an output file
        is omitted if this parameter is not specified.

    -run <from_label>:<to_label>
        only run the commands between the labels (see below). an empty
        from label is synonymous to 'begin', and empty to label is
        synonymous to the end of the command list.

    -noflatten
        do not flatten design before synthesis

    -dff
        run 'abc'/'abc9' with -dff option

    -retime
        run 'abc' with '-dff -D 1' options

    -noccu2
        do not use CCU2 cells in output netlist

    -nodffe
        do not use flipflops with CE in output netlist

    -nobram
        do not use block RAM cells in output netlist

    -nolutram
        do not use LUT RAM cells in output netlist

    -nowidelut
        do not use PFU muxes to implement LUTs larger than LUT4s

    -asyncprld
        use async PRLD mode to implement ALDFF (EXPERIMENTAL)

    -abc2
        run two passes of 'abc' for slightly improved logic density

    -noabc9
        disable use of new ABC9 flow

    -vpr
        generate an output netlist (and BLIF file) suitable for VPR
        (this feature is experimental and incomplete)

    -iopad
        insert IO buffers

    -nodsp
        do not map multipliers to MULT18X18D
```

(continues on next page)

(continued from previous page)

```
    -no-rw-check
        marks all recognized read ports as "return don't-care value on
        read/write collision" (same result as setting the no_rw_check
        attribute on all memories).


The following commands are executed by this synthesis command:

    begin:
        read_verilog -lib -specify +/ecp5/cells_sim.v +/ecp5/cells_bb.v
        hierarchy -check -top <top>

    coarse:
        proc
        flatten
        tribuf -logic
        deminout
        opt_expr
        opt_clean
        check
        opt -nodffe -nosdff
        fsm
        opt
        wreduce
        peepopt
        opt_clean
        share
        techmap -map +/cmp2lut.v -D LUT_WIDTH=4
        opt_expr
        opt_clean
        techmap -map +/mul2dsp.v -map +/ecp5/dsp_map.v -D DSP_A_MAXWIDTH=18 -D DSP_B_
↪MAXWIDTH=18  -D DSP_A_MINWIDTH=2 -D DSP_B_MINWIDTH=2  -D DSP_NAME=$__MUL18X18   ␣
↪(unless -nodsp)
        chtype -set $mul t:$__soft_mul    (unless -nodsp)
        alumacc
        opt
        memory -nomap [-no-rw-check]
        opt_clean

    map_ram:
        memory_libmap -lib +/ecp5/lutrams.txt -lib +/ecp5/brams.txt [-no-auto-block] [-
↪no-auto-distributed]    (-no-auto-block if -nobram, -no-auto-distributed if -nolutram)
        techmap -map +/ecp5/lutrams_map.v -map +/ecp5/brams_map.v

    map_ffram:
        opt -fast -mux_undef -undriven -fine
        memory_map
        opt -undriven -fine

    map_gates:
        techmap -map +/techmap.v -map +/ecp5/arith_map.v
        iopadmap -bits -outpad OB I:O -inpad IB O:I -toutpad OBZ ~T:I:O -tinoutpad BB ~
```

(continues on next page)

(continued from previous page)

```
↪T:O:I:B A:top    (only if '-iopad')
        attrmvcp -attr src -attr LOC t:OB %x:+[O] t:OBZ %x:+[O] t:BB %x:+[B]
        attrmvcp -attr src -attr LOC -driven t:IB %x:+[I]
        opt -fast
        abc -dff -D 1    (only if -retime)

    map_ffs:
        opt_clean
        dfflegalize -cell $_DFF_?_ 01 -cell $_DFF_?P?_ r -cell $_SDFF_?P?_ r [-cell $_
↪DFFE_??_ 01 -cell $_DFFE_?P??_ r -cell $_SDFFE_?P??_ r] [-cell $_ALDFF_?P_ x -cell $_
↪ALDFFE_?P?_ x] [-cell $_DLATCH_?_ x]    ($_ALDFF_*_ only if -asyncprld, $_DLATCH_*␣
↪only if not -asyncprld, $_*DFFE_* only if not -nodffe)
        zinit -all w:* t:$_DFF_?_ t:$_DFFE_??_ t:$_SDFF*    (only if -abc9 and -dff)
        techmap -D NO_LUT -map +/ecp5/cells_map.v
        opt_expr -undriven -mux_undef
        simplemap
        lattice_gsr
        attrmvcp -copy -attr syn_useioff
        opt_clean

    map_luts:
        abc          (only if -abc2)
        techmap -map +/ecp5/latches_map.v    (skip if -asyncprld)
        abc9 -W 300
        clean

    map_cells:
        techmap -map +/ecp5/cells_map.v    (skip if -vpr)
        opt_lut_ins -tech lattice
        clean

    check:
        autoname
        hierarchy -check
        stat
        check -noinit
        blackbox =A:whitebox

    blif:
        opt_clean -purge                                        (vpr mode)
        write_blif -attr -cname -conn -param <file-name>     (vpr mode)
        write_blif -gates -attr -param <file-name>           (non-vpr mode)

    edif:
        write_edif <file-name>

    json:
        write_json <file-name>
```

10.226 synth_efinix - synthesis for Efinix FPGAs

yosys> help **synth_efinix**

```
    synth_efinix [options]

This command runs synthesis for Efinix FPGAs.

    -top <module>
        use the specified module as top module

    -edif <file>
        write the design to the specified EDIF file. writing of an output file
        is omitted if this parameter is not specified.

    -json <file>
        write the design to the specified JSON file. writing of an output file
        is omitted if this parameter is not specified.

    -run <from_label>:<to_label>
        only run the commands between the labels (see below). an empty
        from label is synonymous to 'begin', and empty to label is
        synonymous to the end of the command list.

    -noflatten
        do not flatten design before synthesis

    -retime
        run 'abc' with '-dff -D 1' options

    -nobram
        do not use EFX_RAM_5K cells in output netlist


The following commands are executed by this synthesis command:

    begin:
        read_verilog -lib +/efinix/cells_sim.v
        hierarchy -check -top <top>

    flatten:    (unless -noflatten)
        proc
        flatten
        tribuf -logic
        deminout

    coarse:
        synth -run coarse

    map_ram:
        memory_libmap -lib +/efinix/brams.txt [-no-auto-block]    (-no-auto-block if -
↪nobram)
        techmap -map +/efinix/brams_map.v
```

(continues on next page)

(continued from previous page)

```
    map_ffram:
        opt -fast -mux_undef -undriven -fine
        memory_map
        opt -undriven -fine

    map_gates:
        techmap -map +/techmap.v -map +/efinix/arith_map.v
        opt -fast
        abc -dff -D 1    (only if -retime)

    map_ffs:
        dfflegalize -cell $_DFFE_????_ 0 -cell $_SDFFE_????_ 0 -cell $_SDFFCE_????_ 0 -
↪cell $_DLATCH_?_ x
        techmap -D NO_LUT -map +/efinix/cells_map.v
        opt_expr -mux_undef
        simplemap

    map_luts:
        abc -lut 4
        clean

    map_cells:
        techmap -map +/efinix/cells_map.v
        clean

    map_gbuf:
        clkbufmap -buf $__EFX_GBUF O:I
        techmap -map +/efinix/gbuf_map.v
        efinix_fixcarry
        clean

    check:
        hierarchy -check
        stat
        check -noinit
        blackbox =A:whitebox

    edif:
        write_edif <file-name>

    json:
        write_json <file-name>
```

10.227 synth_fabulous - FABulous synthesis script

yosys> help **synth_fabulous**

```
    synth_fabulous [options]

This command runs synthesis for FPGA fabrics generated with FABulous. This command does␣
```

(continues on next page)

(continued from previous page)

```
↪not operate
on partly selected designs.

    -top <module>
        use the specified module as top module (default='top')

    -auto-top
        automatically determine the top of the design hierarchy

    -blif <file>
        write the design to the specified BLIF file. writing of an output file
        is omitted if this parameter is not specified.

    -edif <file>
        write the design to the specified EDIF file. writing of an output file
        is omitted if this parameter is not specified.

    -json <file>
        write the design to the specified JSON file. writing of an output file
        is omitted if this parameter is not specified.

    -lut <k>
        perform synthesis for a k-LUT architecture (default 4).

    -vpr
        perform synthesis for the FABulous VPR flow (using slightly different␣
↪techmapping).

    -plib <primitive_library.v>
        use the specified Verilog file as a primitive library.

    -extra-plib <primitive_library.v>
        use the specified Verilog file for extra primitives (can be specified multiple
        times).

    -extra-map <techamp.v>
        use the specified Verilog file for extra techmap rules (can be specified multiple
        times).

    -encfile <file>
        passed to 'fsm_recode' via 'fsm'

    -nofsm
        do not run FSM optimization

    -noalumacc
        do not run 'alumacc' pass. i.e. keep arithmetic operators in
        their direct form ($add, $sub, etc.).

    -carry <none|ha>
        carry mapping style (none, half-adders, ...) default=none
```

(continues on next page)

(continued from previous page)

```
    -noregfile
        do not map register files

    -iopad
        enable automatic insertion of IO buffers (otherwise a wrapper
        with manually inserted and constrained IO should be used.)

    -complex-dff
        enable support for FFs with enable and synchronous SR (must also be
        supported by the target fabric.)

    -noflatten
        do not flatten design after elaboration

    -nordff
        passed to 'memory'. prohibits merging of FFs into memory read ports

    -noshare
        do not run SAT-based resource sharing

    -run <from_label>[:<to_label>]
        only run the commands between the labels (see below). an empty
        from label is synonymous to 'begin', and empty to label is
        synonymous to the end of the command list.

    -no-rw-check
        marks all recognized read ports as "return don't-care value on
        read/write collision" (same result as setting the no_rw_check
        attribute on all memories).


The following commands are executed by this synthesis command:
        read_verilog  -lib +/fabulous/prims.v
        read_verilog -lib <extra_plib.v>    (for each -extra-plib)

    begin:
        hierarchy -check
        proc

    flatten:    (unless -noflatten)
        flatten
        tribuf -logic
        deminout

    coarse:
        tribuf -logic
        deminout
        opt_expr
        opt_clean
        check
        opt -nodffe -nosdff
        fsm          (unless -nofsm)
```

(continues on next page)

(continued from previous page)

```
        opt
        wreduce
        peepopt
        opt_clean
        techmap -map +/cmp2lut.v -map +/cmp2lcu.v     (if -lut)
        alumacc      (unless -noalumacc)
        share        (unless -noshare)
        opt
        memory -nomap
        opt_clean

    map_ram:    (unless -noregfile)
        memory_libmap -lib +/fabulous/ram_regfile.txt
        techmap -map +/fabulous/regfile_map.v

    map_ffram:
        opt -fast -mux_undef -undriven -fine
        memory_map
        opt -undriven -fine

    map_gates:
        opt -full
        techmap -map +/techmap.v -map +/fabulous/arith_map.v -D ARITH_<carry>
        opt -fast

    map_iopad:    (if -iopad)
        opt -full
        iopadmap -bits -outpad $__FABULOUS_OBUF I:PAD -inpad $__FABULOUS_IBUF O:PAD -
↪toutpad IO_1_bidirectional_frame_config_pass ~T:I:PAD -tinoutpad IO_1_bidirectional_
↪frame_config_pass ~T:O:I:PAD A:top    (skip if '-noiopad')
        techmap -map +/fabulous/io_map.v

    map_ffs:
        dfflegalize -cell $_DFF_P_ 0 -cell $_DLATCH_?_ x    without -complex-dff
        techmap -map +/fabulous/latches_map.v
        techmap -map +/fabulous/ff_map.v
        techmap -map <extra_map.v>...    (for each -extra-map)
        clean

    map_luts:
        abc -lut 4 -dress
        clean

    map_cells:
        techmap -D LUT_K=4 -map +/fabulous/cells_map.v
        clean

    check:
        hierarchy -check
        stat

    blif:
```

(continues on next page)

(continued from previous page)

```
        opt_clean -purge
        write_blif -attr -cname -conn -param <file-name>

    json:
        write_json <file-name>
```

10.228 synth_gatemate - synthesis for Cologne Chip GateMate FPGAs

yosys> help **synth_gatemate**

```
    synth_gatemate [options]

This command runs synthesis for Cologne Chip AG GateMate FPGAs.

    -top <module>
        use the specified module as top module.

    -vlog <file>
        write the design to the specified verilog file. Writing of an output
        file is omitted if this parameter is not specified.

    -json <file>
        write the design to the specified JSON file. Writing of an output file
        is omitted if this parameter is not specified.

    -run <from_label>:<to_label>
        only run the commands between the labels (see below). An empty
        from label is synonymous to 'begin', and empty to label is
        synonymous to the end of the command list.

    -noflatten
        do not flatten design before synthesis.

    -nobram
        do not use CC_BRAM_20K or CC_BRAM_40K cells in output netlist.

    -noaddf
        do not use CC_ADDF full adder cells in output netlist.

    -nomult
        do not use CC_MULT multiplier cells in output netlist.

    -nomx8, -nomx4
        do not use CC_MX{8,4} multiplexer cells in output netlist.

    -luttree
        use new LUT tree mapping approach (EXPERIMENTAL).

    -dff
        run 'abc' with -dff option
```

(continues on next page)

(continued from previous page)

```
    -retime
        run 'abc' with '-dff -D 1' options

    -noiopad
        disable I/O buffer insertion (useful for hierarchical or
        out-of-context flows).

    -noclkbuf
        disable automatic clock buffer insertion.

The following commands are executed by this synthesis command:

    begin:
        read_verilog -lib -specify +/gatemate/cells_sim.v +/gatemate/cells_bb.v
        hierarchy -check -top <top>

    prepare:
        proc
        flatten
        tribuf -logic
        deminout
        opt_expr
        opt_clean
        check
        opt -nodffe -nosdff
        fsm
        opt
        wreduce
        peepopt
        opt_clean
        muxpack
        share
        techmap -map +/cmp2lut.v -D LUT_WIDTH=4
        opt_expr
        opt_clean

    map_mult:    (skip if '-nomult')
        techmap -map +/gatemate/mul_map.v

    coarse:
        alumacc
        opt
        memory -nomap
        opt_clean

    map_bram:    (skip if '-nobram')
        memory_libmap -lib +/gatemate/brams.txt
        techmap -map +/gatemate/brams_map.v

    map_ffram:
        opt -fast -mux_undef -undriven -fine
        memory_map
```

(continues on next page)

(continued from previous page)

```
        opt -undriven -fine

    map_gates:
        techmap -map +/techmap.v  -map +/gatemate/arith_map.v
        opt -fast

    map_io:    (skip if '-noiopad')
        iopadmap -bits -inpad CC_IBUF Y:I -outpad CC_OBUF A:O -toutpad CC_TOBUF ~T:A:O -
↪tinoutpad CC_IOBUF ~T:Y:A:IO
        clean

    map_regs:
        opt_clean
        dfflegalize -cell $_DFFE_????_ 01 -cell $_DLATCH_???_ 01
        techmap -map +/gatemate/reg_map.v
        opt_expr -mux_undef
        simplemap
        opt_clean

    map_muxs:
        muxcover  -mux4 -mux8
        opt -full
        simplemap
        techmap -map +/gatemate/mux_map.v

    map_luts:
        abc  -genlib +/gatemate/lut_tree_cells.genlib    (with -luttree)
        techmap -map +/gatemate/lut_tree_map.v    (with -luttree)
        gatemate_foldinv    (with -luttree)
        techmap -map +/gatemate/inv_map.v    (with -luttree)
        abc  -dress -lut 4    (without -luttree)
        clean

    map_cells:
        techmap -map +/gatemate/lut_map.v
        clean

    map_bufg:    (skip if '-noclkbuf')
        clkbufmap -buf CC_BUFG O:I
        clean

    check:
        hierarchy -check
        stat -width
        check -noinit
        blackbox =A:whitebox

    vlog:
        opt_clean -purge
        write_verilog -noattr <file-name>

    json:
```

(continues on next page)

(continued from previous page)

```
        write_json <file-name>
```

10.229 synth_gowin - synthesis for Gowin FPGAs

yosys> help **synth_gowin**

```
    synth_gowin [options]

This command runs synthesis for Gowin FPGAs. This work is experimental.

    -top <module>
        use the specified module as top module (default='top')

    -vout <file>
        write the design to the specified Verilog netlist file. writing of an
        output file is omitted if this parameter is not specified.

    -json <file>
        write the design to the specified JSON netlist file. writing of an
        output file is omitted if this parameter is not specified.
        This disables features not yet supported by nexpnr-gowin.

    -run <from_label>:<to_label>
        only run the commands between the labels (see below). an empty
        from label is synonymous to 'begin', and empty to label is
        synonymous to the end of the command list.

    -nodffe
        do not use flipflops with CE in output netlist

    -nobram
        do not use BRAM cells in output netlist

    -nolutram
        do not use distributed RAM cells in output netlist

    -noflatten
        do not flatten design before synthesis

    -retime
        run 'abc' with '-dff -D 1' options

    -nowidelut
        do not use muxes to implement LUTs larger than LUT4s

    -noiopads
        do not emit IOB at top level ports

    -noalu
        do not use ALU cells
```

(continues on next page)

(continued from previous page)

```
    -noabc9
        disable use of new ABC9 flow

    -no-rw-check
        marks all recognized read ports as "return don't-care value on
        read/write collision" (same result as setting the no_rw_check
        attribute on all memories).

    -family <family>
        sets the gowin family to the specified value. The default is 'gw1n'.
            The following families are supported:
        'gw1n', 'gw2a', 'gw5a'.

The following commands are executed by this synthesis command:

    begin:
        read_verilog -specify -lib +/gowin/cells_sim.v
        read_verilog -specify -lib +/gowin/cells_xtra_<family>.v
        hierarchy -check -top <top>

    flatten:    (unless -noflatten)
        proc
        flatten
        tribuf -logic
        deminout

    coarse:
        synth -run coarse [-no-rw-check]

    map_ram:
        memory_libmap -lib +/gowin/lutrams.txt -lib +/gowin/brams.txt [-no-auto-block] [-
↪no-auto-distributed]    (-no-auto-block if -nobram, -no-auto-distributed if -nolutram)
        techmap -map +/gowin/lutrams_map.v -map +/gowin/brams_map.v

    map_ffram:
        opt -fast -mux_undef -undriven -fine
        memory_map
        opt -undriven -fine

    map_gates:
        techmap -map +/techmap.v -map +/gowin/arith_map.v
        opt -fast
        abc -dff -D 1    (only if -retime)
        iopadmap -bits -inpad IBUF O:I -outpad OBUF I:O -toutpad TBUF ~OEN:I:O -
↪tinoutpad IOBUF ~OEN:O:I:IO    (unless -noiopads)

    map_ffs:
        opt_clean
        dfflegalize -cell $_DFF_?_ 0 -cell $_DFFE_?P_ 0 -cell $_SDFF_?P?_ r -cell $_
↪SDFFE_?P?P_ r -cell $_DFF_?P?_ r -cell $_DFFE_?P?P_ r
        techmap -map +/gowin/cells_map.v
        opt_expr -mux_undef
```

(continues on next page)

(continued from previous page)

```
        simplemap

    map_luts:
        read_verilog -icells -lib -specify +/abc9_model.v
        abc9 -maxlut 8 -W 500
        clean

    map_cells:
        techmap -map +/gowin/cells_map.v
        opt_lut_ins -tech gowin
        setundef -undriven -params -zero
        hilomap -singleton -hicell VCC V -locell GND G
        splitnets -ports    (only if -vout used)
        clean
        autoname

    check:
        hierarchy -check
        stat
        check -noinit
        blackbox =A:whitebox

    vout:
        write_verilog -simple-lhs -decimal -attr2comment -defparam -renameprefix gen
↪<file-name>
        write_json <file-name>
```

10.230 synth_greenpak4 - synthesis for GreenPAK4 FPGAs

yosys> help **synth_greenpak4**

```
    synth_greenpak4 [options]

This command runs synthesis for GreenPAK4 FPGAs. This work is experimental.
It is intended to be used with https://github.com/azonenberg/openfpga as the
place-and-route.

    -top <module>
        use the specified module as top module (default='top')

    -part <part>
        synthesize for the specified part. Valid values are SLG46140V,
        SLG46620V, and SLG46621V (default).

    -json <file>
        write the design to the specified JSON file. writing of an output file
        is omitted if this parameter is not specified.

    -run <from_label>:<to_label>
        only run the commands between the labels (see below). an empty
        from label is synonymous to 'begin', and empty to label is
```

(continues on next page)

(continued from previous page)

```
        synonymous to the end of the command list.

    -noflatten
        do not flatten design before synthesis

    -retime
        run 'abc' with '-dff -D 1' options


The following commands are executed by this synthesis command:

    begin:
        read_verilog -lib +/greenpak4/cells_sim.v
        hierarchy -check -top <top>

    flatten:    (unless -noflatten)
        proc
        flatten
        tribuf -logic

    coarse:
        synth -run coarse

    fine:
        extract_counter -pout GP_DCMP,GP_DAC -maxwidth 14
        clean
        opt -fast -mux_undef -undriven -fine
        memory_map
        opt -undriven -fine
        techmap -map +/techmap.v -map +/greenpak4/cells_latch.v
        dfflibmap -prepare -liberty +/greenpak4/gp_dff.lib
        opt -fast -noclkinv -noff
        abc -dff -D 1    (only if -retime)

    map_luts:
        nlutmap -assert -luts 0,6,8,2     (for -part SLG46140V)
        nlutmap -assert -luts 2,8,16,2    (for -part SLG46620V)
        nlutmap -assert -luts 2,8,16,2    (for -part SLG46621V)
        clean

    map_cells:
        shregmap -tech greenpak4
        dfflibmap -liberty +/greenpak4/gp_dff.lib
        dffinit -ff GP_DFF Q INIT
        dffinit -ff GP_DFFR Q INIT
        dffinit -ff GP_DFFS Q INIT
        dffinit -ff GP_DFFSR Q INIT
        iopadmap -bits -inpad GP_IBUF OUT:IN -outpad GP_OBUF IN:OUT -inoutpad GP_OBUF␣
↪OUT:IN -toutpad GP_OBUFT OE:IN:OUT -tinoutpad GP_IOBUF OE:OUT:IN:IO
        attrmvcp -attr src -attr LOC t:GP_OBUF t:GP_OBUFT t:GP_IOBUF n:*
        attrmvcp -attr src -attr LOC -driven t:GP_IBUF n:*
        techmap -map +/greenpak4/cells_map.v
```

(continues on next page)

(continued from previous page)

```
        greenpak4_dffinv
        clean

    check:
        hierarchy -check
        stat
        check -noinit
        blackbox =A:whitebox

    json:
        write_json <file-name>
```

10.231 synth_ice40 - synthesis for iCE40 FPGAs

yosys> help **synth_ice40**

```
    synth_ice40 [options]

This command runs synthesis for iCE40 FPGAs.

    -device < hx | lp | u >
        relevant only for '-abc9' flow, optimise timing for the specified
        device. default: hx

    -top <module>
        use the specified module as top module

    -blif <file>
        write the design to the specified BLIF file. writing of an output file
        is omitted if this parameter is not specified.

    -edif <file>
        write the design to the specified EDIF file. writing of an output file
        is omitted if this parameter is not specified.

    -json <file>
        write the design to the specified JSON file. writing of an output file
        is omitted if this parameter is not specified.

    -run <from_label>:<to_label>
        only run the commands between the labels (see below). an empty
        from label is synonymous to 'begin', and empty to label is
        synonymous to the end of the command list.

    -noflatten
        do not flatten design before synthesis

    -dff
        run 'abc'/'abc9' with -dff option

    -retime
```

(continues on next page)

(continued from previous page)

```
        run 'abc' with '-dff -D 1' options

    -nocarry
        do not use SB_CARRY cells in output netlist

    -nodffe
        do not use SB_DFFE* cells in output netlist

    -dffe_min_ce_use <min_ce_use>
        do not use SB_DFFE* cells if the resulting CE line would go to less
        than min_ce_use SB_DFFE* in output netlist

    -nobram
        do not use SB_RAM40_4K* cells in output netlist

    -spram
        enable automatic inference of SB_SPRAM256KA

    -dsp
        use iCE40 UltraPlus DSP cells for large arithmetic

    -noabc
        use built-in Yosys LUT techmapping instead of abc

    -abc2
        run two passes of 'abc' for slightly improved logic density

    -vpr
        generate an output netlist (and BLIF file) suitable for VPR
        (this feature is experimental and incomplete)

    -noabc9
        disable use of new ABC9 flow

    -flowmap
        use FlowMap LUT techmapping instead of abc (EXPERIMENTAL)

    -no-rw-check
        marks all recognized read ports as "return don't-care value on
        read/write collision" (same result as setting the no_rw_check
        attribute on all memories).


The following commands are executed by this synthesis command:

    begin:
        read_verilog -D ICE40_HX -lib -specify +/ice40/cells_sim.v
        hierarchy -check -top <top>
        proc

    flatten:    (unless -noflatten)
        flatten
```

(continues on next page)

(continued from previous page)

```
        tribuf -logic
        deminout

    coarse:
        opt_expr
        opt_clean
        check
        opt -nodffe -nosdff
        fsm
        opt
        wreduce
        peepopt
        opt_clean
        share
        techmap -map +/cmp2lut.v -D LUT_WIDTH=4
        opt_expr
        opt_clean
        memory_dff [-no-rw-check]
        wreduce t:$mul
        techmap -map +/mul2dsp.v -map +/ice40/dsp_map.v -D DSP_A_MAXWIDTH=16 -D DSP_B_
↪MAXWIDTH=16 -D DSP_A_MINWIDTH=2 -D DSP_B_MINWIDTH=2 -D DSP_Y_MINWIDTH=11 -D DSP_NAME=$_
↪_MUL16X16    (if -dsp)
        select a:mul2dsp                  (if -dsp)
        setattr -unset mul2dsp            (if -dsp)
        opt_expr -fine                    (if -dsp)
        wreduce                           (if -dsp)
        select -clear                     (if -dsp)
        ice40_dsp                         (if -dsp)
        chtype -set $mul t:$__soft_mul    (if -dsp)
        alumacc
        opt
        memory -nomap [-no-rw-check]
        opt_clean

    map_ram:
        memory_libmap -lib +/ice40/brams.txt -lib +/ice40/spram.txt [-no-auto-huge] [-no-
↪auto-block]    (-no-auto-huge unless -spram, -no-auto-block if -nobram)
        techmap -map +/ice40/brams_map.v -map +/ice40/spram_map.v
        ice40_braminit

    map_ffram:
        opt -fast -mux_undef -undriven -fine
        memory_map
        opt -undriven -fine

    map_gates:
        ice40_wrapcarry
        techmap -map +/techmap.v -map +/ice40/arith_map.v
        opt -fast
        abc -dff -D 1    (only if -retime)
        ice40_opt
```

(continues on next page)

(continued from previous page)

```
    map_ffs:
        dfflegalize -cell $_DFF_?_ 0 -cell $_DFFE_?P_ 0 -cell $_DFF_?P?_ 0 -cell $_DFFE_?
↪P?P_ 0 -cell $_SDFF_?P?_ 0 -cell $_SDFFCE_?P?P_ 0 -cell $_DLATCH_?_ x -mince -1
        techmap -map +/ice40/ff_map.v
        opt_expr -mux_undef
        simplemap
        ice40_opt -full

    map_luts:
        abc          (only if -abc2)
        ice40_opt    (only if -abc2)
        techmap -map +/ice40/latches_map.v
        simplemap                                   (if -noabc or -flowmap)
        techmap -map +/gate2lut.v -D LUT_WIDTH=4    (only if -noabc)
        flowmap -maxlut 4    (only if -flowmap)
        read_verilog -D ICE40_HX -icells -lib -specify +/ice40/abc9_model.v
        abc9  -W 250
        ice40_wrapcarry -unwrap
        techmap -map +/ice40/ff_map.v
        clean
        opt_lut -tech ice40

    map_cells:
        techmap -map +/ice40/cells_map.v    (skip if -vpr)
        clean

    check:
        autoname
        hierarchy -check
        stat
        check -noinit
        blackbox =A:whitebox

    blif:
        opt_clean -purge                                        (vpr mode)
        write_blif -attr -cname -conn -param <file-name>     (vpr mode)
        write_blif -gates -attr -param <file-name>           (non-vpr mode)

    edif:
        write_edif <file-name>

    json:
        write_json <file-name>
```

10.232 synth_intel - synthesis for Intel (Altera) FPGAs.

yosys> help **synth_intel**

```
    synth_intel [options]

This command runs synthesis for Intel FPGAs.
```

(continues on next page)

(continued from previous page)

```
    -family <max10 | cyclone10lp | cycloneiv | cycloneive>
        generate the synthesis netlist for the specified family.
        MAX10 is the default target if no family argument specified.
        For Cyclone IV GX devices, use cycloneiv argument; for Cyclone IV E, use
        cycloneive. For Cyclone V and Cyclone 10 GX, use the synth_intel_alm
        backend instead.

    -top <module>
        use the specified module as top module (default='top')

    -vqm <file>
        write the design to the specified Verilog Quartus Mapping File. Writing
        of an output file is omitted if this parameter is not specified.
        Note that this backend has not been tested and is likely incompatible
        with recent versions of Quartus.

    -vpr <file>
        write BLIF files for VPR flow experiments. The synthesized BLIF output
        file is not compatible with the Quartus flow. Writing of an
        output file is omitted if this parameter is not specified.

    -run <from_label>:<to_label>
        only run the commands between the labels (see below). an empty
        from label is synonymous to 'begin', and empty to label is
        synonymous to the end of the command list.

    -dff
        pass DFFs to ABC to perform sequential logic optimisations
        (EXPERIMENTAL)

    -iopads
        use IO pad cells in output netlist

    -nobram
        do not use block RAM cells in output netlist

    -nodsp
        do not map multipliers to MUL18/MUL9 cells

    -noflatten
        do not flatten design before synthesis

    -retime
        run 'abc' with '-dff -D 1' options

The following commands are executed by this synthesis command:

    begin:

    family:
        read_verilog -sv -lib +/intel/max10/cells_sim.v
```

(continues on next page)

(continued from previous page)

```
    read_verilog -sv -lib +/intel/common/m9k_bb.v
    read_verilog -sv -lib +/intel/common/altpll_bb.v
    hierarchy -check -top <top>

coarse:
    proc
    flatten    (skip if -noflatten)
    tribuf -logic
    deminout
    opt_expr
    opt_clean
    check
    opt -nodffe -nosdff
    fsm
    opt
    wreduce
    peepopt
    opt_clean
    techmap -map +/cmp2lut.v -D LUT_WIDTH=4
    opt_expr
    opt_clean
    techmap -map +mul2dsp.v [...]    (unless -nodsp)
    opt
    memory -nomap
    opt_clean

map_bram:    (skip if -nobram)
    memory_bram -rules +/intel/common/brams_m9k.txt    (if applicable for family)
    techmap -map +/intel/common/brams_map_m9k.v    (if applicable for family)

map_ffram:
    opt -fast -mux_undef -undriven -fine -full
    memory_map
    opt -undriven -fine
    techmap -map +/techmap.v
    opt -full
    clean -purge
    setundef -undriven -zero
    abc -markgroups -dff -D 1    (only if -retime)

map_ffs:
    dfflegalize -cell $_DFFE_PN0P_ 01
    techmap -map +/intel/common/ff_map.v

map_luts:
    abc9 -lut 4 -W 300
    clean
    opt -fast
    autoname
    clean

map_cells:
```

(continues on next page)

(continued from previous page)

```
        iopadmap -bits -outpad $__outpad I:O -inpad $__inpad O:I    (if -iopads)
        techmap -map +/intel/max10/cells_map.v
        clean -purge

    check:
        hierarchy -check
        stat
        check -noinit
        blackbox =A:whitebox

    vqm:
        write_verilog -attr2comment -defparam -nohex -decimal -renameprefix syn_ <file-
↪name>

    vpr:
        opt_clean -purge
        write_blif <file-name>


WARNING: THE 'synth_intel' COMMAND IS EXPERIMENTAL.
```

10.233 synth_intel_alm - synthesis for ALM-based Intel (Altera) FPGAs.

yosys> help **synth_intel_alm**

```
    synth_intel_alm [options]

This command runs synthesis for ALM-based Intel FPGAs.

    -top <module>
        use the specified module as top module

    -family <family>
        target one of:
        "cyclonev"    - Cyclone V (default)

    -noflatten
        do not flatten design before synthesis; useful for per-module area
        statistics

    -dff
        pass DFFs to ABC to perform sequential logic optimisations
        (EXPERIMENTAL)

    -run <from_label>:<to_label>
        only run the commands between the labels (see below). an empty
        from label is synonymous to 'begin', and empty to label is
        synonymous to the end of the command list.
```

(continues on next page)

(continued from previous page)

```
    -nolutram
        do not use LUT RAM cells in output netlist

    -nobram
        do not use block RAM cells in output netlist

    -nodsp
        do not map multipliers to MISTRAL_MUL cells

    -noiopad
        do not instantiate IO buffers

    -noclkbuf
        do not insert global clock buffers

The following commands are executed by this synthesis command:

    begin:
        read_verilog -specify -lib -D <family> +/intel_alm/common/alm_sim.v
        read_verilog -specify -lib -D <family> +/intel_alm/common/dff_sim.v
        read_verilog -specify -lib -D <family> +/intel_alm/common/dsp_sim.v
        read_verilog -specify -lib -D <family> +/intel_alm/common/mem_sim.v
        read_verilog -specify -lib -D <family> +/intel_alm/common/misc_sim.v
        read_verilog -specify -lib -D <family> -icells +/intel_alm/common/abc9_model.v
        read_verilog -lib +/intel/common/altpll_bb.v
        read_verilog -lib +/intel_alm/common/megafunction_bb.v
        hierarchy -check -top <top>

    coarse:
        proc
        flatten    (skip if -noflatten)
        tribuf -logic
        deminout
        opt_expr
        opt_clean
        check
        opt -nodffe -nosdff
        fsm
        opt
        wreduce
        peepopt
        opt_clean
        share
        techmap -map +/cmp2lut.v -D LUT_WIDTH=6
        opt_expr
        opt_clean
        techmap -map +/mul2dsp.v [...]    (unless -nodsp)
        alumacc
        iopadmap -bits -outpad MISTRAL_OB I:PAD -inpad MISTRAL_IB O:PAD -toutpad MISTRAL_
↪IO OE:O:PAD -tinoutpad MISTRAL_IO OE:O:I:PAD A:top    (unless -noiopad)
        techmap -map +/intel_alm/common/arith_alm_map.v -map +/intel_alm/common/dsp_map.v
        opt
```

(continues on next page)

(continued from previous page)

```
        memory -nomap
        opt_clean

    map_bram:    (skip if -nobram)
        memory_bram -rules +/intel_alm/common/bram_<bram_type>.txt
        techmap -map +/intel_alm/common/bram_<bram_type>_map.v

    map_lutram:    (skip if -nolutram)
        memory_bram -rules +/intel_alm/common/lutram_mlab.txt    (for Cyclone V)

    map_ffram:
        memory_map
        opt -full

    map_ffs:
        techmap
        dfflegalize -cell $_DFFE_PN0P_ 0 -cell $_SDFFCE_PP0P_ 0
        techmap -map +/intel_alm/common/dff_map.v
        opt -full -undriven -mux_undef
        clean -purge
        clkbufmap -buf MISTRAL_CLKBUF Q:A    (unless -noclkbuf)

    map_luts:
        techmap -map +/intel_alm/common/abc9_map.v
        abc9 [-dff] -maxlut 6 -W 600
        techmap -map +/intel_alm/common/abc9_unmap.v
        techmap -map +/intel_alm/common/alm_map.v
        opt -fast
        autoname
        clean

    check:
        hierarchy -check
        stat
        check
        blackbox =A:whitebox
```

10.234 synth_lattice - synthesis for Lattice FPGAs

yosys> help **synth_lattice**

```
    synth_lattice [options]

This command runs synthesis for Lattice FPGAs (excluding iCE40 and Nexus).

    -top <module>
        use the specified module as top module

    -family <family>
        run synthesis for the specified Lattice architecture
        generate the synthesis netlist for the specified family.
```

(continues on next page)

(continued from previous page)

```
        supported values:
        - ecp5: ECP5
        - xo2: MachXO2
        - xo3: MachXO3L/LF
        - xo3d: MachXO3D

    -edif <file>
        write the design to the specified EDIF file. writing of an output file
        is omitted if this parameter is not specified.

    -json <file>
        write the design to the specified JSON file. writing of an output file
        is omitted if this parameter is not specified.

    -run <from_label>:<to_label>
        only run the commands between the labels (see below). an empty
        from label is synonymous to 'begin', and empty to label is
        synonymous to the end of the command list.

    -noflatten
        do not flatten design before synthesis

    -dff
        run 'abc'/'abc9' with -dff option

    -retime
        run 'abc' with '-dff -D 1' options

    -noccu2
        do not use CCU2 cells in output netlist

    -nodffe
        do not use flipflops with CE in output netlist

    -nobram
        do not use block RAM cells in output netlist

    -nolutram
        do not use LUT RAM cells in output netlist

    -nowidelut
        do not use PFU muxes to implement LUTs larger than LUT4s
        (by default enabled on MachXO2/XO3/XO3D)

    -widelut
        force use of PFU muxes to implement LUTs larger than LUT4s

    -asyncprld
        use async PRLD mode to implement ALDFF (EXPERIMENTAL)

    -abc2
        run two passes of 'abc' for slightly improved logic density
```

(continues on next page)

(continued from previous page)

```
    -abc9
        use new ABC9 flow (EXPERIMENTAL)

    -iopad
        insert IO buffers

    -nodsp
        do not map multipliers to MULT18X18D

    -no-rw-check
        marks all recognized read ports as "return don't-care value on
        read/write collision" (same result as setting the no_rw_check
        attribute on all memories).

    -cmp2softlogic
        implement constant comparisons in soft logic, do not involve
        hard carry chains


The following commands are executed by this synthesis command:

    begin:
        read_verilog -lib -specify +/lattice/cells_sim.v +/lattice/cells_bb.v
        hierarchy -check -top <top>

    coarse:
        proc
        flatten
        tribuf -logic
        deminout
        opt_expr
        opt_clean
        check
        opt -nodffe -nosdff
        fsm
        opt
        wreduce
        peepopt
        opt_clean
        share
        techmap -map +/cmp2lut.v -D LUT_WIDTH=4
        opt_expr
        opt_clean
        booth    (only if '-family xo3')
        alumacc
        opt
        memory -nomap [-no-rw-check]
        opt_clean

    map_ram:
        memory_libmap -lib +/lattice/lutrams.txt -lib +/lattice/brams.txt [-no-auto-
```

(continues on next page)

(continued from previous page)

```
↪block] [-no-auto-distributed]    (-no-auto-block if -nobram, -no-auto-distributed if -
↪nolutram)
        techmap -map +/lattice/lutrams_map.v -map +/lattice/brams_map.v

    map_ffram:
        opt -fast -mux_undef -undriven -fine
        memory_map
        opt -undriven -fine -mux_undef

    map_gates:
        techmap -map +/techmap.v -map +/lattice/arith_map.v
        iopadmap -bits -outpad OB I:O -inpad IB O:I -toutpad OBZ ~T:I:O -tinoutpad BB ~
↪T:O:I:B A:top    (only if '-iopad')
        attrmvcp -attr src -attr LOC t:OB %x:+[O] t:OBZ %x:+[O] t:BB %x:+[B]
        attrmvcp -attr src -attr LOC -driven t:IB %x:+[I]
        opt -fast
        abc -dff -D 1    (only if -retime)

    map_ffs:
        opt_clean
        dfflegalize -cell $_DFF_?_ 01 -cell $_DFF_?P?_ r -cell $_SDFF_?P?_ r [-cell $_
↪DFFE_??_ 01 -cell $_DFFE_?P??_ r -cell $_SDFFE_?P??_ r] [-cell $_ALDFF_?P_ x -cell $_
↪ALDFFE_?P?_ x] [-cell $_DLATCH_?_ x]    ($_ALDFF_*_ only if -asyncprld, $_DLATCH_*␣
↪only if not -asyncprld, $_*DFFE_* only if not -nodffe)
        opt_merge
        zinit -all w:* t:$_DFF_?_ t:$_DFFE_??_ t:$_SDFF*    (only if -abc9 and -dff)
        techmap -D NO_LUT -map +/lattice/cells_map.v
        opt_expr -undriven -mux_undef
        simplemap
        lattice_gsr
        attrmvcp -copy -attr syn_useioff
        opt_clean

    map_luts:
        abc          (only if -abc2)
        techmap -map +/lattice/latches_map.v    (skip if -asyncprld)
        abc -dress -lut 4:7
        clean

    map_cells:
        techmap -map +/lattice/cells_map.v
        opt_lut_ins -tech lattice
        clean

    check:
        autoname
        hierarchy -check
        stat
        check -noinit
        blackbox =A:whitebox

    edif:
```

(continues on next page)

(continued from previous page)

```
        write_edif <file-name>

    json:
        write_json <file-name>
```

10.235 synth_microchip - synthesis for Microchip FPGAs

yosys> help **synth_microchip**

```
    synth_microchip [options]

This command runs synthesis for Microchip FPGAs. This command creates
netlists that are compatible with Microchip PolarFire devices.

    -top <module>
        use the specified module as the top module

    -family <family>
        Run synthesis for the specified Microchip architecture.
        Generate the synthesis netlist for the specified family.
        supported values:
        - polarfire: PolarFire

    -edif <file>
        Write the design to the specified edif file. Writing of an output file
        is omitted if this parameter is not specified.

    -blif <file>
        Write the design to the specified BLIF file. Writing of an output file
        is omitted if this parameter is not specified.

    -vlog <file>
        write the design to the specified Verilog file. writing of an output
        file is omitted if this parameter is not specified.
    -nobram
        Do not use block RAM cells in output netlist

    -nocarry
        Do not use ARI1 cells in output netlist

    -nodsp
        Do not use MATH blocks to implement multipliers and associated logic

    -noiopad
        Disable I/O buffer insertion (useful for hierarchical or
        out-of-context flows)

    -noclkbuf
        Disable automatic clock buffer insertion

    -run <from_label>:<to_label>
```

(continues on next page)

(continued from previous page)

```
        Only run the commands between the labels (see below). an empty
        'from_label' is synonymous to 'begin', and empty 'to_label' is
        synonymous to the end of the command list.

    -noflatten
        do not flatten design before synthesis

    -dff
        Run 'abc'/'abc9' with -dff option

    -retime
        Run 'abc' with '-D 1' option to enable flip-flop retiming.
        implies -dff.

    -noabc9
        Use classic ABC flow instead of ABC9

    -discard-ffinit
        discard FF init value instead of emitting an error


The following commands are executed by this synthesis command:

    begin:
        read_verilog -lib -specify +/microchip/cells_sim.v
        hierarchy -check -auto-top

    prepare:
        proc
        flatten    (with '-flatten')
        tribuf -logic
        deminout
        opt_expr
        opt_clean
        check
        opt -nodffe -nosdff
        fsm
        opt
        wreduce
        peepopt
        opt_clean

    map_dsp:    (skip if '-nodsp')
        memory_dff
        techmap -map +/mul2dsp.v -map +/microchip/{family}_dsp_map.v {options}
        select a:mul2dsp
        setattr -unset mul2dsp
        opt_expr -fine
        wreduce
        select -clear
        microchip_dsp -family <family>
        chtype -set $mul t:$__soft_mul
```

(continues on next page)

(continued from previous page)

```
   coarse:
       techmap -map +/cmp2lut.v -map +/cmp2lcu.v -D LUT_WIDTH=[4]
       alumacc
       share
       opt
       memory -nomap
       opt_clean
       attrmap -remove init    (only if -discard-ffinit)

   map_memory:
       memory_libmap [...]
       techmap -map +/microchip/LSRAM_map.v
       techmap -map +/microchip/uSRAM_map.v

   map_ffram:
       opt -fast -full
       memory_map

   fine:
       opt -full
       simplemap t:$mux
       simplemap t:$xor
       extract_reduce
       muxcover -nodecode -mux4=220
       techmap -map +/microchip/arith_map.v
       techmap -map +/techmap.v
       opt -fast

   map_cells:
       iopadmap -bits -inpad INBUF Y:PAD -outpad OUTBUF D:PAD -toutpad TRIBUFF E:D:PAD -
↪tinoutpad BIBUF E:Y:D:PAD    (unless -noiobs)
       techmap -map +/techmap.v -map +/microchip/cells_map.v
       clean

   map_ffs:
       dfflegalize -cell $_DFFE_PN?P_ x -cell $_SDFFCE_PN?P_ x -cell $_DLATCH_PN?_ x  ␣
↪(Converts FFs to supported types)
       zinit -all w:* t:$_SDFFCE_*    ('-dff' only)
       techmap -D NO_LUT -map +/microchip/cells_map.v    ('-abc9' only)

   map_luts:
       opt_expr -mux_undef -noclkinv
       abc -luts 2:2,3,6:5[,10,20] [-dff] [-D 1]    (option for '-nowidelut', '-dff', '-
↪retime')
       clean
       techmap -D NO_LUT -map +/microchip/cells_map.v    (only if not '-abc9')
       techmap -map +/microchip/cells_map.v -D FINAL_MAP -D LUT_WIDTH=[4]
       microchip_dffopt
       clkbufmap -buf CLKINT Y:A -inpad CLKBUF Y:PAD
       clean -purge
```

(continues on next page)

(continued from previous page)

```
    check:
        hierarchy -check
        stat
        check -noinit
        blackbox =A:whitebox

    edif:
        write_edif -pvector bra

    blif:
        write_blif

    vlog:
        write_verilog <file-name>
```

10.236 synth_nanoxplore - synthesis for NanoXplore FPGAs

yosys> help **synth_nanoxplore**

```
    synth_nanoxplore [options]

This command runs synthesis for NanoXplore FPGAs.

    -top <module>
        use the specified module as top module

    -family <family>
        run synthesis for the specified NanoXplore architecture
        generate the synthesis netlist for the specified family.
        supported values:
        - medium: NG-Medium
        - large: NG-Large
        - ultra: NG-Ultra

    -json <file>
        write the design to the specified JSON file. writing of an output file
        is omitted if this parameter is not specified.

    -run <from_label>:<to_label>
        only run the commands between the labels (see below). an empty
        from label is synonymous to 'begin', and empty to label is
        synonymous to the end of the command list.

    -noflatten
        do not flatten design before synthesis

    -abc9
        use new ABC9 flow (EXPERIMENTAL)

    -nocy
        do not map adders to CY cells
```

(continues on next page)

(continued from previous page)

```
    -nodffe
        do not use flipflops with L in output netlist

    -min_ce_use <min_ce_use>
        do not use flip-flops with load signal if the resulting count is less
        than min_ce_use in output netlist

    -min_srst_use <min_srst_use>
        do not use flip-flops with async reset signal if the resulting count is less
        than min_srst_use in output netlist

    -norfram
        do not use Register File RAM cells in output netlist

    -nobram
        do not use block NX_RAM cells in output netlist

    -noiopad
        do not insert IO buffers

    -no-rw-check
        marks all recognized read ports as "return don't-care value on
        read/write collision" (same result as setting the no_rw_check
        attribute on all memories).


The following commands are executed by this synthesis command:

    begin:
        read_verilog -lib -specify +/nanoxplore/cells_sim.v +/nanoxplore/cells_sim.v +/
↪nanoxplore/cells_bb.v +/nanoxplore/cells_bb.v
        techmap -map +/nanoxplore/cells_wrap.v
        techmap -map +/nanoxplore/cells_wrap.v
        hierarchy -check -top <top>

    coarse:
        proc
        flatten    (skip if -noflatten)
        tribuf -logic
        deminout
        opt_expr
        opt_clean
        check
        opt -nodffe -nosdff
        fsm
        opt
        wreduce
        peepopt
        opt_clean
        share
        techmap -map +/cmp2lut.v -D LUT_WIDTH=4
```

(continues on next page)

(continued from previous page)

```
        opt_expr
        opt_clean
        alumacc
        opt
        memory -nomap [-no-rw-check]
        opt_clean

    map_ram:
        memory_libmap -lib +/nanoxplore/rf_rams.txt -lib +/nanoxplore/brams.txt [-no-
↪auto-block] [-no-auto-distributed]    (-no-auto-block if -nobram, -no-auto-distributed␣
↪if -norfram)
        techmap -map +/nanoxplore/rf_rams_map.v -map +/nanoxplore/brams_map.v
        techmap -map +/nanoxplore/cells_wrap.v t:NX_RAM*
        techmap -map +/nanoxplore/cells_wrap.v t:NX_XRFB* t:NX_RFB*

    map_ffram:
        opt -fast -mux_undef -undriven -fine
        memory_map
        opt -undriven -fine -mux_undef

    map_gates:
        techmap -map +/techmap.v -map +/nanoxplore/arith_map.v
        nx_carry
        iopadmap -bits -outpad $__BEYOND_OBUF I:PAD -toutpad $__BEYOND_TOBUF C:I:PAD -
↪inpad $__BEYOND_IBUF O:PAD -tinoutpad $__BEYOND_IOBUF C:O:I:PAD A:top    (skip if '-
↪noiopad')
        techmap -map +/nanoxplore/io_map.v
        opt -fast

    map_ffs:
        dfflegalize -cell $_DFF_?_ 01 -cell $_DFF_?P?_ r -cell $_SDFF_?P?_ r [-cell $_
↪DFFE_?P_ 01 -cell $_DFFE_?P?P_ r -cell $_SDFFE_?P?P_ r] -cell $_DLATCH_?_ x -mince 8 -
↪minsrst 8    ($_*DFFE_* only if not -nodffe)
        opt_merge
        techmap -map +/nanoxplore/latches_map.v
        techmap -map +/nanoxplore/cells_map.v
        opt_expr -undriven -mux_undef
        clean -purge

    map_luts:
        abc -dress -lut 4
        techmap -map +/nanoxplore/cells_map.v t:$lut
        opt -fast
        clean

    check:
        autoname
        hierarchy -check
        stat
        check -noinit
        blackbox =A:whitebox
        setundef -zero -undriven
```

(continues on next page)

(continued from previous page)

```
    json:
        write_json <file-name>
```

10.237 synth_nexus - synthesis for Lattice Nexus FPGAs

yosys> help **synth_nexus**

```
    synth_nexus [options]

This command runs synthesis for Lattice Nexus FPGAs.

    -top <module>
        use the specified module as top module

    -family <device>
        run synthesis for the specified Nexus device
        supported values: lifcl, lfd2nx

    -json <file>
        write the design to the specified JSON file. writing of an output file
        is omitted if this parameter is not specified.

    -vm <file>
        write the design to the specified structural Verilog file. writing of
        an output file is omitted if this parameter is not specified.

    -run <from_label>:<to_label>
        only run the commands between the labels (see below). an empty
        from label is synonymous to 'begin', and empty to label is
        synonymous to the end of the command list.

    -noflatten
        do not flatten design before synthesis

    -dff
        run 'abc'/'abc9' with -dff option

    -retime
        run 'abc' with '-dff -D 1' options

    -noccu2
        do not use CCU2 cells in output netlist

    -nodffe
        do not use flipflops with CE in output netlist

    -nolram
        do not use large RAM cells in output netlist
        note that large RAM must be explicitly requested with a (* lram *)
        attribute on the memory.
```

(continues on next page)

(continued from previous page)

```
    -nobram
        do not use block RAM cells in output netlist

    -nolutram
        do not use LUT RAM cells in output netlist

    -nowidelut
        do not use PFU muxes to implement LUTs larger than LUT4s

    -noiopad
        do not insert IO buffers

    -nodsp
        do not infer DSP multipliers

    -abc9
        use new ABC9 flow (EXPERIMENTAL)

The following commands are executed by this synthesis command:

    begin:
        read_verilog -lib -specify +/nexus/cells_sim.v +/nexus/cells_xtra.v
        hierarchy -check -top <top>

    coarse:
        proc
        flatten
        tribuf -logic
        deminout
        opt_expr
        opt_clean
        check
        opt -nodffe -nosdff
        fsm
        opt
        wreduce
        peepopt
        opt_clean
        share
        techmap -map +/cmp2lut.v -D LUT_WIDTH=4
        opt_expr
        opt_clean
        techmap -map +/mul2dsp.v [...]    (unless -nodsp)
        techmap -map +/nexus/dsp_map.v    (unless -nodsp)
        alumacc
        opt
        memory -nomap
        opt_clean

    map_ram:
        memory_libmap -lib +/nexus/lutrams.txt -lib +/nexus/brams.txt -lib +/nexus/lrams.
```

(continues on next page)

(continued from previous page)

```
↪txt -no-auto-huge [-no-auto-block] [-no-auto-distributed]    (-no-auto-block if -
↪nobram, -no-auto-distributed if -nolutram)
        techmap -map +/nexus/lutrams_map.v -map +/nexus/brams_map.v -map +/nexus/lrams_
↪map.v

    map_ffram:
        opt -fast -mux_undef -undriven -fine
        memory_map
        opt -undriven -fine

    map_gates:
        techmap -map +/techmap.v -map +/nexus/arith_map.v
        iopadmap -bits -outpad OB I:O -inpad IB O:I -toutpad OBZ ~T:I:O -tinoutpad BB ~
↪T:O:I:B A:top    (skip if '-noiopad')
        opt -fast
        abc -dff -D 1    (only if -retime)

    map_ffs:
        opt_clean
        dfflegalize -cell $_DFF_P_ 01 -cell $_DFF_PP?_ r -cell $_SDFF_PP?_ r -cell $_
↪DLATCH_?_ x [-cell $_DFFE_PP_ 01 -cell $_DFFE_PP?P_ r -cell $_SDFFE_PP?P_ r]    ($_
↪*DFFE_* only if not -nodffe)
        zinit -all w:* t:$_DFF_?_ t:$_DFFE_??_ t:$_SDFF*    (only if -abc9 and -dff
        techmap -D NO_LUT -map +/nexus/cells_map.v
        opt_expr -undriven -mux_undef
        simplemap
        attrmvcp -copy -attr syn_useioff
        opt_clean

    map_luts:
        techmap -map +/nexus/latches_map.v
        abc -dress -lut 4:5
        clean

    map_cells:
        techmap -map +/nexus/cells_map.v
        setundef -zero
        hilomap -singleton -hicell VHI Z -locell VLO Z
        clean

    check:
        autoname
        hierarchy -check
        stat
        check -noinit
        blackbox =A:whitebox

    json:
        write_json <file-name>

    vm:
        write_verilog <file-name>
```

10.238 synth_quicklogic - Synthesis for QuickLogic FPGAs

yosys> help **synth_quicklogic**

```
   synth_quicklogic [options]
This command runs synthesis for QuickLogic FPGAs

    -top <module>
         use the specified module as top module

    -family <family>
        run synthesis for the specified QuickLogic architecture
        generate the synthesis netlist for the specified family.
        supported values:
        - pp3: PolarPro 3
        - qlf_k6n10f: K6N10f

    -nodsp
        do not use dsp_t1_* to implement multipliers and associated logic
        (qlf_k6n10f only).

    -nocarry
        do not use adder_carry cells in output netlist.

    -nobram
        do not use block RAM cells in output netlist.

    -bramtypes
        Emit specialized BRAM cells for particular address and data width
        configurations.

    -blif <file>
        write the design to the specified BLIF file. writing of an output file
        is omitted if this parameter is not specified.

    -verilog <file>
        write the design to the specified verilog file. writing of an output
        file is omitted if this parameter is not specified.

    -abc
        use old ABC flow, which has generally worse mapping results but is less
        likely to have bugs.

The following commands are executed by this synthesis command:

    begin:
        read_verilog -lib -specify +/quicklogic/common/cells_sim.v +/quicklogic/<family>/
↪cells_sim.v
        hierarchy -check -top <top>

    prepare:
        proc
        flatten
```

(continues on next page)

(continued from previous page)

```
        tribuf -logic                       (for pp3)
        deminout
        opt_expr
        opt_clean
        check
        opt -nodffe -nosdff
        fsm
        opt
        wreduce
        peepopt
        opt_clean
        share

    map_dsp:    (for qlf_k6n10f, skip if -nodsp)
        wreduce t:$mul
        ql_dsp_macc
        techmap -map +/mul2dsp.v -D DSP_A_MAXWIDTH=20 -D DSP_B_MAXWIDTH=18 -D DSP_A_
↪MINWIDTH=11 -D DSP_B_MINWIDTH=10 -D DSP_NAME=$__QL_MUL20X18
        techmap -map +/mul2dsp.v -D DSP_A_MAXWIDTH=10 -D DSP_B_MAXWIDTH=9 -D DSP_A_
↪MINWIDTH=4 -D DSP_B_MINWIDTH=4 -D DSP_NAME=$__QL_MUL10X9
        chtype -set $mul t:$__soft_mul
        techmap -map +/quicklogic/<family>/dsp_map.v -D USE_DSP_CFG_PARAMS=0
        ql_dsp_simd
        techmap -map +/quicklogic/<family>/dsp_final_map.v
        ql_dsp_io_regs

    coarse:
        techmap -map +/cmp2lut.v -D LUT_WIDTH=4
        opt_expr
        opt_clean
        alumacc
        pmuxtree
        opt
        memory -nomap
        opt_clean

    map_bram:    (for qlf_k6n10f, skip if -no_bram)
        memory_libmap -lib +/quicklogic/<family>/libmap_brams.txt
        ql_bram_merge
        techmap -map +/quicklogic/<family>/libmap_brams_map.v
        techmap -autoproc -map +/quicklogic/<family>/brams_map.v
        ql_bram_types    (if -bramtypes)

    map_ffram:
        opt -fast -mux_undef -undriven -fine
        memory_map -iattr -attr !ram_block -attr !rom_block -attr logic_block -attr syn_
↪ramstyle=auto -attr syn_ramstyle=registers -attr syn_romstyle=auto -attr syn_
↪romstyle=logic
        opt -undriven -fine

    map_gates:
        techmap
```

(continues on next page)

(continued from previous page)

```
        opt -fast
        muxcover -mux8 -mux4    (for pp3)

    map_ffs:
        opt_expr
        shregmap -minlen <min> -maxlen <max>    (for qlf_k6n10f)
        dfflegalize -cell <supported FF types>
        techmap -map +/quicklogic/<family>/cells_map.v    (for pp3)
        techmap -map +/quicklogic/<family>/ffs_map.v    (for ql_k6n10f)
        opt

    map_luts:    (for pp3)
        techmap -map +/quicklogic/<family>/latches_map.v
        read_verilog -lib -specify -icells +/quicklogic/<family>/abc9_model.v
        techmap -map +/quicklogic/<family>/abc9_map.v
        abc9 -maxlut 4 -dff
        techmap -map +/quicklogic/<family>/abc9_unmap.v
        clean

    map_luts:    (for qlf_k6n10f)
        abc9 -maxlut 6
        clean
        opt_lut

    map_cells:    (for pp3)
        techmap -map +/quicklogic/<family>/lut_map.v
        clean
        opt_lut

    iomap:    (for qlf_k6n10f, skip if -noioff)
        ql_ioff
        opt_clean

    check:
        autoname
        hierarchy -check
        stat
        check -noinit

    iomap:    (for pp3)
        clkbufmap -inpad ckpad Q:P
        iopadmap -bits -outpad outpad A:P -inpad inpad Q:P -tinoutpad bipad EN:Q:A:P␣
↪A:top

    finalize:
        setundef -zero -params -undriven    (for pp3)
        opt_clean -purge
        check
        blackbox =A:whitebox

    blif:    (if -blif)
        write_blif -attr -param -auto-top
```

(continues on next page)

(continued from previous page)

```
    verilog:    (if -verilog)
        write_verilog -noattr -nohex <file-name>
```

10.239 synth_sf2 - synthesis for SmartFusion2 and IGLOO2 FPGAs

yosys> help **synth_sf2**

```
    synth_sf2 [options]

This command runs synthesis for SmartFusion2 and IGLOO2 FPGAs.

    -top <module>
        use the specified module as top module

    -edif <file>
        write the design to the specified EDIF file. writing of an output file
        is omitted if this parameter is not specified.

    -vlog <file>
        write the design to the specified Verilog file. writing of an output
        file is omitted if this parameter is not specified.

    -json <file>
        write the design to the specified JSON file. writing of an output file
        is omitted if this parameter is not specified.

    -run <from_label>:<to_label>
        only run the commands between the labels (see below). an empty
        from label is synonymous to 'begin', and empty to label is
        synonymous to the end of the command list.

    -noflatten
        do not flatten design before synthesis

    -noiobs
        run synthesis in "block mode", i.e. do not insert IO buffers

    -clkbuf
        insert direct PAD->global_net buffers

    -discard-ffinit
        discard FF init value instead of emitting an error

    -retime
        run 'abc' with '-dff -D 1' options


The following commands are executed by this synthesis command:

    begin:
```

(continues on next page)

(continued from previous page)

```
        read_verilog -lib +/sf2/cells_sim.v
        hierarchy -check -top <top>

    flatten:    (unless -noflatten)
        proc
        flatten
        tribuf -logic
        deminout

    coarse:
        attrmap -remove init    (only if -discard-ffinit)
        synth -run coarse

    fine:
        opt -fast -mux_undef -undriven -fine
        memory_map
        opt -undriven -fine
        techmap -map +/techmap.v -map +/sf2/arith_map.v
        opt -fast
        abc -dff -D 1    (only if -retime)

    map_ffs:
        dfflegalize -cell $_DFFE_PN?P_ x -cell $_SDFFCE_PN?P_ x -cell $_DLATCH_PN?_ x
        techmap -D NO_LUT -map +/sf2/cells_map.v
        opt_expr -mux_undef
        simplemap

    map_luts:
        abc -lut 4
        clean

    map_cells:
        techmap -map +/sf2/cells_map.v
        clean

    map_iobs:
        clkbufmap -buf CLKINT Y:A [-inpad CLKBUF Y:PAD]    (unless -noiobs, -inpad only␣
↪passed if -clkbuf)
        iopadmap -bits -inpad INBUF Y:PAD -outpad OUTBUF D:PAD -toutpad TRIBUFF E:D:PAD -
↪tinoutpad BIBUF E:Y:D:PAD    (unless -noiobs)
        clean -purge

    check:
        hierarchy -check
        stat
        check -noinit
        blackbox =A:whitebox

    edif:
        write_edif -gndvccy <file-name>

    vlog:
```

(continues on next page)

(continued from previous page)

```
        write_verilog <file-name>

    json:
        write_json <file-name>
```

10.240 synth_xilinx - synthesis for Xilinx FPGAs

yosys> help **synth_xilinx**

```
    synth_xilinx [options]

This command runs synthesis for Xilinx FPGAs. This command does not operate on
partly selected designs. At the moment this command creates netlists that are
compatible with 7-Series Xilinx devices.

    -top <module>
        use the specified module as top module

    -family <family>
        run synthesis for the specified Xilinx architecture
        generate the synthesis netlist for the specified family.
        supported values:
        - xcup: Ultrascale Plus
        - xcu: Ultrascale
        - xc7: Series 7 (default)
        - xc6s: Spartan 6
        - xc6v: Virtex 6
        - xc5v: Virtex 5 (EXPERIMENTAL)
        - xc4v: Virtex 4 (EXPERIMENTAL)
        - xc3sda: Spartan 3A DSP (EXPERIMENTAL)
        - xc3sa: Spartan 3A (EXPERIMENTAL)
        - xc3se: Spartan 3E (EXPERIMENTAL)
        - xc3s: Spartan 3 (EXPERIMENTAL)
        - xc2vp: Virtex 2 Pro (EXPERIMENTAL)
        - xc2v: Virtex 2 (EXPERIMENTAL)
        - xcve: Virtex E, Spartan 2E (EXPERIMENTAL)
        - xcv: Virtex, Spartan 2 (EXPERIMENTAL)

    -edif <file>
        write the design to the specified edif file. writing of an output file
        is omitted if this parameter is not specified.

    -blif <file>
        write the design to the specified BLIF file. writing of an output file
        is omitted if this parameter is not specified.

    -ise
        generate an output netlist suitable for ISE

    -nobram
        do not use block RAM cells in output netlist
```

(continues on next page)

(continued from previous page)

```
    -nolutram
        do not use distributed RAM cells in output netlist

    -nosrl
        do not use distributed SRL cells in output netlist

    -nocarry
        do not use XORCY/MUXCY/CARRY4 cells in output netlist

    -nowidelut
        do not use MUXF[5-9] resources to implement LUTs larger than native for
        the target

    -nodsp
        do not use DSP48*s to implement multipliers and associated logic

    -noiopad
        disable I/O buffer insertion (useful for hierarchical or
        out-of-context flows)

    -noclkbuf
        disable automatic clock buffer insertion

    -uram
        infer URAM288s for large memories (xcup only)

    -widemux <int>
        enable inference of hard multiplexer resources (MUXF[78]) for muxes at
        or above this number of inputs (minimum value 2, recommended value >= 5)
        default: 0 (no inference)

    -json <file>
        write the design to the specified JSON file. writing of an output file
        is omitted if this parameter is not specified.

    -run <from_label>:<to_label>
        only run the commands between the labels (see below). an empty
        from label is synonymous to 'begin', and empty to label is
        synonymous to the end of the command list.

    -flatten
        flatten design before synthesis

    -dff
        run 'abc'/'abc9' with -dff option

    -retime
        run 'abc' with '-D 1' option to enable flip-flop retiming.
        implies -dff.

    -abc9
```

(continues on next page)

(continued from previous page)

```
        use new ABC9 flow (EXPERIMENTAL)


The following commands are executed by this synthesis command:

    begin:
        read_verilog -lib -specify +/xilinx/cells_sim.v
        read_verilog -lib +/xilinx/cells_xtra.v
        hierarchy -check -auto-top

    prepare:
        proc
        flatten    (with '-flatten')
        tribuf -logic
        deminout
        opt_expr
        opt_clean
        check
        opt -nodffe -nosdff
        fsm
        opt
        wreduce [-keepdc]    (option for '-widemux')
        peepopt
        opt_clean
        muxpack        ('-widemux' only)
        pmux2shiftx    (skip if '-nosrl' and '-widemux=0')
        clean          (skip if '-nosrl' and '-widemux=0')

    map_dsp:    (skip if '-nodsp')
        memory_dff
        techmap -map +/mul2dsp.v -map +/xilinx/{family}_dsp_map.v {options}
        select a:mul2dsp
        setattr -unset mul2dsp
        opt_expr -fine
        wreduce
        select -clear
        xilinx_dsp -family <family>
        chtype -set $mul t:$__soft_mul

    coarse:
        techmap -map +/cmp2lut.v -map +/cmp2lcu.v -D LUT_WIDTH=[46]
        alumacc
        share
        opt
        memory -nomap
        opt_clean

    map_memory:
        memory_libmap [...]
        techmap -map +/xilinx/lutrams_<family>_map.v
        techmap -map +/xilinx/brams_<family>_map.v
```

(continues on next page)

(continued from previous page)

```
    map_ffram:
        opt -fast -full
        memory_map

    fine:
        simplemap t:$mux    ('-widemux' only)
        muxcover <internal options>    ('-widemux' only)
        opt -full
        xilinx_srl -variable -minlen 3    (skip if '-nosrl')
        techmap  -map +/techmap.v -D LUT_SIZE=[46] [-map +/xilinx/mux_map.v] -map +/
↪xilinx/arith_map.v
        opt -fast

    map_cells:
        iopadmap -bits -outpad OBUF I:O -inpad IBUF O:I -toutpad OBUFT ~T:I:O -tinoutpad␣
↪IOBUF ~T:O:I:IO A:top    (skip if '-noiopad')
        techmap -map +/techmap.v -map +/xilinx/cells_map.v
        clean

    map_ffs:
        dfflegalize -cell $_DFFE_?P?P_ 01 -cell $_SDFFE_?P?P_ 01 -cell $_DLATCH_?P?_ 01 ␣
↪  (for xc6v, xc7, xcu, xcup)
        zinit -all w:* t:$_SDFFE_*    ('-dff' only)
        techmap -map +/xilinx/ff_map.v    ('-abc9' only)

    map_luts:
        opt_expr -mux_undef -noclkinv
        abc -luts 2:2,3,6:5[,10,20] [-dff] [-D 1]    (option for '-nowidelut', '-dff', '-
↪retime')
        clean
        techmap -map +/xilinx/ff_map.v    (only if not '-abc9')
        xilinx_srl -fixed -minlen 3    (skip if '-nosrl')
        techmap -map +/xilinx/lut_map.v -map +/xilinx/cells_map.v -D LUT_WIDTH=[46]
        xilinx_dffopt [-lut4]
        opt_lut_ins -tech xilinx

    finalize:
        clkbufmap -buf BUFG O:I    (skip if '-noclkbuf')
        extractinv -inv INV O:I    (only if '-ise')
        clean

    check:
        hierarchy -check
        stat -tech xilinx
        check -noinit
        blackbox =A:whitebox

    edif:
        write_edif -pvector bra

    blif:
        write_blif
```

(continues on next page)

(continued from previous page)

```
    json:
        write_json <file-name>
```

10.241 synthprop - synthesize SVA properties

yosys> help **synthprop**

```
    synthprop [options]

This creates synthesizable properties for the selected module.


    -name <portname>
        name of the output port for assertions (default: assertions).

    -map <filename>
        write the port mapping for synthesizable properties into the given file.

    -or_outputs
        Or all outputs together to create a single output that goes high when
        any property is violated, instead of generating individual output bits.

    -reset <portname>
        name of the top-level reset input. Latch a high state on the generated
        outputs until an asynchronous top-level reset input is activated.

    -resetn <portname>
        like above but with inverse polarity
```

10.242 tcl - execute a TCL script file

yosys> help **tcl**

```
    tcl <filename> [args]

This command executes the tcl commands in the specified file.
Use 'yosys cmd' to run the yosys command 'cmd' from tcl.

The tcl command 'yosys -import' can be used to import all yosys
commands directly as tcl commands to the tcl shell. Yosys commands
'proc' and 'rename' are wrapped to tcl commands 'procs' and 'renames'
in order to avoid a name collision with the built in commands.

If any arguments are specified, these arguments are provided to the script via
the standard $argc and $argv variables.

Note, tcl will not receive the output of any yosys command. If the output
of the tcl commands are needed, use the yosys command 'tee -s result.string'
```

(continues on next page)

(continued from previous page)

```
to redirect yosys's output to the 'result.string' scratchpad value.
The 'result.string' value is then used as the tcl output value of the command.
```

10.243 techmap - generic technology mapper

yosys> help **techmap**

```
    techmap [-map filename] [selection]

This pass implements a very simple technology mapper that replaces cells in
the design with implementations given in form of a Verilog or RTLIL source
file.

    -map filename
        the library of cell implementations to be used.
        without this parameter a builtin library is used that
        transforms the internal RTL cells to the internal gate
        library.

    -map %<design-name>
        like -map above, but with an in-memory design instead of a file.

    -extern
        load the cell implementations as separate modules into the design
        instead of inlining them.

    -max_iter <number>
        only run the specified number of iterations on each module.
        default: unlimited

    -recursive
        instead of the iterative breadth-first algorithm use a recursive
        depth-first algorithm. both methods should yield equivalent results,
        but may differ in performance.

    -autoproc
        Automatically call "proc" on implementations that contain processes.

    -wb
        Ignore the 'whitebox' attribute on cell implementations.

    -assert
        this option will cause techmap to exit with an error if it can't map
        a selected cell. only cell types that end on an underscore are accepted
        as final cell types by this mode.

    -D <define>, -I <incdir>
        this options are passed as-is to the Verilog frontend for loading the
        map file. Note that the Verilog frontend is also called with the
        '-nooverwrite' option set.
```

(continues on next page)

(continued from previous page)

```
    -dont_map <celltype>
        leave the given cell type unmapped by ignoring any mapping rules for it

When a module in the map file has the 'techmap_celltype' attribute set, it will
match cells with a type that match the text value of this attribute. Otherwise
the module name will be used to match the cell.  Multiple space-separated cell
types can be listed, and wildcards using [] will be expanded (ie.
"$_DFF_[PN]_" is the same as "$_DFF_P_ $_DFF_N_").

When a module in the map file has the 'techmap_simplemap' attribute set, techmap
will use 'simplemap' (see 'help simplemap') to map cells matching the module.

When a module in the map file has the 'techmap_maccmap' attribute set, techmap
will use 'maccmap' (see 'help maccmap') to map cells matching the module.

When a module in the map file has the 'techmap_wrap' attribute set, techmap
will create a wrapper for the cell and then run the command string that the
attribute is set to on the wrapper module.

When a port on a module in the map file has the 'techmap_autopurge' attribute
set, and that port is not connected in the instantiation that is mapped, then
a cell port connected only to such wires will be omitted in the mapped version
of the circuit.

All wires in the modules from the map file matching the pattern _TECHMAP_*
or *._TECHMAP_* are special wires that are used to pass instructions from
the mapping module to the techmap command. At the moment the following special
wires are supported:

    _TECHMAP_FAIL_
        When this wire is set to a non-zero constant value, techmap will not
        use this module and instead try the next module with a matching
        'techmap_celltype' attribute.

        When such a wire exists but does not have a constant value after all
        _TECHMAP_DO_* commands have been executed, an error is generated.

    _TECHMAP_DO_*
        This wires are evaluated in alphabetical order. The constant text value
        of this wire is a yosys command (or sequence of commands) that is run
        by techmap on the module. A common use case is to run 'proc' on modules
        that are written using always-statements.

        When such a wire has a non-constant value at the time it is to be
        evaluated, an error is produced. That means it is possible for such a
        wire to start out as non-constant and evaluate to a constant value
        during processing of other _TECHMAP_DO_* commands.

        A _TECHMAP_DO_* command may start with the special token 'CONSTMAP; '.
        in this case techmap will create a copy for each distinct configuration
        of constant inputs and shorted inputs at this point and import the
        constant and connected bits into the map module. All further commands
```

(continues on next page)

(continued from previous page)

```
        are executed in this copy. This is a very convenient way of creating
        optimized specializations of techmap modules without using the special
        parameters described below.

        A _TECHMAP_DO_* command may start with the special token 'RECURSION; '.
        then techmap will recursively replace the cells in the module with their
        implementation. This is not affected by the -max_iter option.

        It is possible to combine both prefixes to 'RECURSION; CONSTMAP; '.

    _TECHMAP_REMOVEINIT_<port-name>_
        When this wire is set to a constant value, the init attribute of the
        wire(s) connected to this port will be consumed.  This wire must have
        the same width as the given port, and for every bit that is set to 1 in
        the value, the corresponding init attribute bit will be changed to 1'bx.
        If all bits of an init attribute are left as x, it will be removed.

In addition to this special wires, techmap also supports special parameters in
modules in the map file:

    _TECHMAP_CELLTYPE_
        When a parameter with this name exists, it will be set to the type name
        of the cell that matches the module.

    _TECHMAP_CELLNAME_
        When a parameter with this name exists, it will be set to the name
        of the cell that matches the module.

    _TECHMAP_CONSTMSK_<port-name>_
    _TECHMAP_CONSTVAL_<port-name>_
        When this pair of parameters is available in a module for a port, then
        former has a 1-bit for each constant input bit and the latter has the
        value for this bit. The unused bits of the latter are set to undef (x).

    _TECHMAP_WIREINIT_<port-name>_
        When a parameter with this name exists, it will be set to the initial
        value of the wire(s) connected to the given port, as specified by the
        init attribute. If the attribute doesn't exist, x will be filled for the
        missing bits.  To remove the init attribute bits used, use the
        _TECHMAP_REMOVEINIT_*_ wires.

    _TECHMAP_BITS_CONNMAP_
    _TECHMAP_CONNMAP_<port-name>_
        For an N-bit port, the _TECHMAP_CONNMAP_<port-name>_ parameter, if it
        exists, will be set to an N*_TECHMAP_BITS_CONNMAP_ bit vector containing
        N words (of _TECHMAP_BITS_CONNMAP_ bits each) that assign each single
        bit driver a unique id. The values 0-3 are reserved for 0, 1, x, and z.
        This can be used to detect shorted inputs.

When a module in the map file has a parameter where the according cell in the
design has a port, the module from the map file is only used if the port in
the design is connected to a constant value. The parameter is then set to the
```

(continues on next page)

(continued from previous page)

```
constant value.

A cell with the name _TECHMAP_REPLACE_ in the map file will inherit the name
and attributes of the cell that is being replaced.
A cell with a name of the form `_TECHMAP_REPLACE_.<suffix>` in the map file will
be named thus but with the `_TECHMAP_REPLACE_' prefix substituted with the name
of the cell being replaced.
Similarly, a wire named in the form `_TECHMAP_REPLACE_.<suffix>` will cause a
new wire alias to be created and named as above but with the `_TECHMAP_REPLACE_'
prefix also substituted.

A cell with the type _TECHMAP_PLACEHOLDER_ in the map file will have its type
changed to the content of the techmap_chtype attribute. This allows for choosing
the cell type dynamically.

See 'help extract' for a pass that does the opposite thing.

See 'help flatten' for a pass that does flatten the design (which is
essentially techmap but using the design itself as map library).
```

10.244 tee - redirect command output to file

yosys> help **tee**

```
    tee [-q] [-o logfile|-a logfile] cmd

Execute the specified command, optionally writing the commands output to the
specified logfile(s).

    -q
        Do not print output to the normal destination (console and/or log file).

    -o logfile
        Write output to this file, truncate if exists.

    -a logfile
        Write output to this file, append if exists.

    -s scratchpad
        Write output to this scratchpad value, truncate if it exists.

    +INT, -INT
        Add/subtract INT from the -v setting for this command.
```

10.245 test_abcloop - automatically test handling of loops in abc command

yosys> help **test_abcloop**

```
    test_abcloop [options]

Test handling of logic loops in ABC.

    -n {integer}
        create this number of circuits and test them (default = 100).

    -s {positive_integer}
        use this value as rng seed value (default = unix time).
```

10.246 test_autotb - generate simple test benches

yosys> help **test_autotb**

```
    test_autotb [options] [filename]

Automatically create primitive Verilog test benches for all modules in the
design. The generated testbenches toggle the input pins of the module in
a semi-random manner and dumps the resulting output signals.

This can be used to check the synthesis results for simple circuits by
comparing the testbench output for the input files and the synthesis results.

The backend automatically detects clock signals. Additionally a signal can
be forced to be interpreted as clock signal by setting the attribute
'gentb_clock' on the signal.

The attribute 'gentb_constant' can be used to force a signal to a constant
value after initialization. This can e.g. be used to force a reset signal
low in order to explore more inner states in a state machine.

The attribute 'gentb_skip' can be attached to modules to suppress testbench
generation.

    -n <int>
        number of iterations the test bench should run (default = 1000)

    -seed <int>
        seed used for pseudo-random number generation (default = 0).
        a value of 0 will cause an arbitrary seed to be chosen, based on
        the current system time.
```

10.247 test_cell - automatically test the implementation of a cell type

yosys> help **test_cell**

```
    test_cell [options] {cell-types}

Tests the internal implementation of the given cell type (for example '$add')
by comparing SAT solver, EVAL and TECHMAP implementations of the cell types..
```

(continues on next page)

(continued from previous page)

```
Run with 'all' instead of a cell type to run the test on all supported
cell types. Use for example 'all /$add' for all cell types except $add.

    -n {integer}
        create this number of cell instances and test them (default = 100).

    -s {positive_integer}
        use this value as rng seed value (default = unix time).

    -f {rtlil_file}
        don't generate circuits. instead load the specified RTLIL file.

    -w {filename_prefix}
        don't test anything. just generate the circuits and write them
        to RTLIL files with the specified prefix

    -map {filename}
        pass this option to techmap.

    -simlib
        use "techmap -D SIMLIB_NOCHECKS -map +/simlib.v -max_iter 2 -autoproc"

    -aigmap
        instead of calling "techmap", call "aigmap"

    -muxdiv
        when creating test benches with dividers, create an additional mux
        to mask out the division-by-zero case

    -script {script_file}
        instead of calling "techmap", call "script {script_file}".

    -const
        set some input bits to random constant values

    -nosat
        do not check SAT model or run SAT equivalence checking

    -noeval
        do not check const-eval models

    -noopt
        do not opt tecchmapped design

    -edges
        test cell edges db creator against sat-based implementation

    -v
        print additional debug information to the console

    -vlog {filename}
```

(continues on next page)

(continued from previous page)

```
        create a Verilog test bench to test simlib and write_verilog
    -bloat {factor}
        increase cell size limits b{factor} times where possible
    -check_cost
        check if the estimated cell cost is a valid upper bound for
        the techmapped cell count
```

10.248 test_generic - test the generic compute graph

yosys> help **test_generic**

```
TODO: add help message
```

10.249 test_pmgen - test pass for pmgen

yosys> help **test_pmgen**

```
    test_pmgen -reduce_chain [options] [selection]

Demo for recursive pmgen patterns. Map chains of AND/OR/XOR to $reduce_*.


    test_pmgen -reduce_tree [options] [selection]

Demo for recursive pmgen patterns. Map trees of AND/OR/XOR to $reduce_*.


    test_pmgen -eqpmux [options] [selection]

Demo for recursive pmgen patterns. Optimize EQ/NE/PMUX circuits.


    test_pmgen -generate [options] <pattern_name>

Create modules that match the specified pattern.
```

10.250 torder - print cells in topological order

yosys> help **torder**

```
    torder [options] [selection]

This command prints the selected cells in topological order.

    -stop <cell_type> <cell_port>
        do not use the specified cell port in topological sorting

    -noautostop
```

(continues on next page)

(continued from previous page)

```
        by default Q outputs of internal FF cells and memory read port outputs
        are not used in topological sorting. this option deactivates that.
```

10.251 trace - redirect command output to file

yosys> help **trace**

```
    trace cmd

Execute the specified command, logging all changes the command performs on
the design in real time.
```

10.252 tribuf - infer tri-state buffers

yosys> help **tribuf**

```
    tribuf [options] [selection]

This pass transforms $mux cells with 'z' inputs to tristate buffers.

    -merge
        merge multiple tri-state buffers driving the same net
        into a single buffer.

    -logic
        convert tri-state buffers that do not drive output ports
        to non-tristate logic. this option implies -merge.

    -formal
        convert all tri-state buffers to non-tristate logic and
        add a formal assertion that no two buffers are driving the
        same net simultaneously. this option implies -merge.
```

10.253 uniquify - create unique copies of modules

yosys> help **uniquify**

```
    uniquify [selection]

By default, a module that is instantiated by several other modules is only
kept once in the design. This preserves the original modularity of the design
and reduces the overall size of the design in memory. But it prevents certain
optimizations and other operations on the design. This pass creates unique
modules for all selected cells. The created modules are marked with the
'unique' attribute.

This commands only operates on modules that by themself have the 'unique'
attribute set (the 'top' module is unique implicitly).
```

10.254 verific - load Verilog and VHDL designs using Verific

yosys> help **verific**

```
    verific [-work <libname>] {-sv|-vhdl|...} <hdl-file>

Load the specified Verilog/SystemVerilog/VHDL file into the specified library.
(default library when -work is not present: "work")


    verific [-L <libname>] {-sv|-vhdl|...} <hdl-file>

Look up external definitions in the specified library.
(-L may be used more than once)


    verific -set-error <msg_id>..
    verific -set-warning <msg_id>..
    verific -set-info <msg_id>..
    verific -set-ignore <msg_id>..

Set message severity. <msg_id> is the string in square brackets when a message
is printed, such as VERI-1209.
Also errors, warnings, infos and comments could be used to set new severity for
all messages of certain type.


    verific -import [options] <top>..

Elaborate the design for the specified top modules or configurations, import to
Yosys and reset the internal state of Verific.

Import options:

  -all
    Elaborate all modules, not just the hierarchy below the given top
    modules. With this option the list of modules to import is optional.

  -gates
    Create a gate-level netlist.

  -flatten
    Flatten the design in Verific before importing.

  -extnets
    Resolve references to external nets by adding module ports as needed.

  -no-split-complex-ports
    Complex ports (structs or arrays) are not split and remain packed as a single port.

  -fullinit
    Keep all register initializations, even those for non-FF registers.
```

(continues on next page)

(continued from previous page)

```
  -cells
    Import all cell definitions from Verific loaded libraries even if they are
    unused in design. Useful with "-edif" and "-liberty" option.

  -chparam name value
    Elaborate the specified top modules (all modules when -all given) using
    this parameter value. Modules on which this parameter does not exist will
    cause Verific to produce a VERI-1928 or VHDL-1676 message. This option
    can be specified multiple times to override multiple parameters.
    String values must be passed in double quotes (").

  -v, -vv
    Verbose log messages. (-vv is even more verbose than -v.)

  -pp <filename>
    Pretty print design after elaboration to specified file.

The following additional import options are useful for debugging the Verific
bindings (for Yosys and/or Verific developers):

  -k
    Keep going after an unsupported verific primitive is found. The
    unsupported primitive is added as blockbox module to the design.
    This will also add all SVA related cells to the design parallel to
    the checker logic inferred by it.

  -V
    Import Verific netlist as-is without translating to Yosys cell types.

  -n
    Keep all Verific names on instances and nets. By default only
    user-declared names are preserved.

  -d <dump_file>
    Dump the Verific netlist as a verilog file.


    verific [-work <libname>] -pp [options] <filename> [<module>]..

Pretty print design (or just module) to the specified file from the
specified library. (default library when -work is not present: "work")

Pretty print options:

  -verilog
    Save output for Verilog/SystemVerilog design modules (default).

  -vhdl
    Save output for VHDL design units.


    verific -cfg [<name> [<value>]]
```

(continues on next page)

(continued from previous page)

```
Get/set Verific runtime flags.


Use YosysHQ Tabby CAD Suite if you need Yosys+Verific.
https://www.yosyshq.com/

Contact office@yosyshq.com for free evaluation
binaries of YosysHQ Tabby CAD Suite.
```

10.255 verilog_defaults - set default options for read_verilog

yosys> help **verilog_defaults**

```
    verilog_defaults -add [options]

Add the specified options to the list of default options to read_verilog.


    verilog_defaults -clear

Clear the list of Verilog default options.


    verilog_defaults -push
    verilog_defaults -pop

Push or pop the list of default options to a stack. Note that -push does
not imply -clear.
```

10.256 verilog_defines - define and undefine verilog defines

yosys> help **verilog_defines**

```
    verilog_defines [options]

Define and undefine verilog preprocessor macros.

    -Dname[=definition]
        define the preprocessor symbol 'name' and set its optional value
        'definition'

    -Uname[=definition]
        undefine the preprocessor symbol 'name'

    -reset
        clear list of defined preprocessor symbols

    -list
        list currently defined preprocessor symbols
```

10.257 viz - visualize data flow graph

yosys> help **viz**

```
    viz [options] [selection]

Create a graphviz DOT file for the selected part of the design, showing the
relationships between the selected wires, and compile it to a graphics
file (usually SVG or PostScript).

    -viewer <viewer>
        Run the specified command with the graphics file as parameter.
        On Windows, this pauses yosys until the viewer exits.

    -format <format>
        Generate a graphics file in the specified format. Use 'dot' to just
        generate a .dot file, or other <format> strings such as 'svg' or 'ps'
        to generate files in other formats (this calls the 'dot' command).

    -prefix <prefix>
        generate <prefix>.* instead of ~/.yosys_viz.*

    -pause
        wait for the user to press enter to before returning

    -nobg
        don't run viewer in the background, IE wait for the viewer tool to
        exit before returning

    -set-vg-attr
        set their group index as 'vg' attribute on cells and wires

    -g <selection>
        manually define a group of terminal signals. this group is not being
        merged with other terminal groups.

    -u <selection>
        manually define a unique group for each wire in the selection.

    -x <selection>
        manually exclude wires from being considered. (usually this is
        used for global signals, such as reset.)

    -s <selection>
        like -g, but mark group as 'special', changing the algorithm to
        preserve as much info about this groups connectivity as possible.

    -G <selection_expr> .
    -U <selection_expr> .
    -X <selection_expr> .
    -S <selection_expr> .
        like -u, -g, -x, and -s, but parse all arguments up to a terminating .
        as a single select expression. (see 'help select' for details)
```

(continues on next page)

(continued from previous page)

```
    -0, -1, -2, -3, -4, -5, -6, -7, -8, -9
        select effort level. each level corresponds to an incresingly more
        aggressive sequence of strategies for merging nodes of the data flow
        graph. (default: 9)

When no <format> is specified, 'dot' is used. When no <format> and <viewer> is
specified, 'xdot' is used to display the schematic (POSIX systems only).

The generated output files are '~/.yosys_viz.dot' and '~/.yosys_viz.<format>',
unless another prefix is specified using -prefix <prefix>.

Yosys on Windows and YosysJS use different defaults: The output is written
to 'show.dot' in the current directory and new viewer is launched each time
the 'show' command is executed.
```

10.258 wbflip - flip the whitebox attribute

yosys> help **wbflip**

```
    wbflip [selection]

Flip the whitebox attribute on selected cells. I.e. if it's set, unset it, and
vice-versa. Blackbox cells are not effected by this command.
```

10.259 wrapcell - wrap individual cells into new modules

yosys> help **wrapcell**

```
    wrapcell -name <format> [selection]

This command wraps the selected cells individually into modules. The name for
each wrapper module is derived from the template <format> by substituting
parameter values as specified in curly brackets. If the named module already
exists, it is reused.

If the template contains the special string '{%unused}', the command tracks
unused output ports -- specialized wrapper modules will be generated per every
distinct set of unused port bits as appearing on any selected cell.

    -setattr <attribute-name>
        set the given boolean attribute on each created wrapper module

    -formatattr <attribute-name> <format>
        set a string attribute on the created wrapper module by substituting
        parameter values into <format>

Currently this command only supports wrapping internal cell types.
```

10.260 wreduce - reduce the word size of operations if possible

yosys> help **wreduce**

```
    wreduce [options] [selection]

This command reduces the word size of operations. For example it will replace
the 32 bit adders in the following code with adders of more appropriate widths:

    module test(input [3:0] a, b, c, output [7:0] y);
        assign y = a + b + c + 1;
    endmodule

Options:

    -memx
        Do not change the width of memory address ports. Use this options in
        flows that use the 'memory_memx' pass.

    -mux_undef
        remove 'undef' inputs from $mux, $pmux and $_MUX_ cells

    -keepdc
        Do not optimize explicit don't-care values.
```

10.261 write_aiger - write design to AIGER file

yosys> help **write_aiger**

```
    write_aiger [options] [filename]

Write the current design to an AIGER file. The design must be flattened and
must not contain any cell types except $_AND_, $_NOT_, simple FF types,
$assert and $assume cells, and $initstate cells.

$assert and $assume cells are converted to AIGER bad state properties and
invariant constraints.

    -ascii
        write ASCII version of AIGER format

    -zinit
        convert FFs to zero-initialized FFs, adding additional inputs for
        uninitialized FFs.

    -miter
        design outputs are AIGER bad state properties

    -symbols
        include a symbol table in the generated AIGER file

    -map <filename>
```

(continues on next page)

(continued from previous page)

```
        write an extra file with port and latch symbols

    -vmap <filename>
        like -map, but more verbose

    -no-startoffset
        make indexes zero based, enable using map files with smt solvers.

    -ywmap <filename>
        write a map file for conversion to and from yosys witness traces.

    -I, -O, -B, -L
        If the design contains no input/output/assert/flip-flop then create one
        dummy input/output/bad_state-pin or latch to make the tools reading the
        AIGER file happy.
```

10.262 write_aiger2 - (experimental) write design to AIGER file

yosys> help **write_aiger2**

```
    write_aiger2 [options] [filename]

Write the selected module to an AIGER file.

    -strash
        perform structural hashing while writing

    -flatten
        allow descending into submodules and write a flattened view of the design
        hierarchy starting at the selected top

This command is able to ingest all combinational cells except for:

    $macc_v2, $alu, $lcu, $demux, $bweqx, $macc, $concat, $pow, $modfloor,
    $divfloor, $mod, $div, $mul, $sub, $add, $nex, $eqx, $shiftx, $shift,
    $sshr, $sshl, $shr, $shl, $sop, $lut, $slice, $neg,

And all combinational gates except for:

    $_TBUF_, $_MUX16_, $_MUX8_, $_MUX4_,

WARNING: THE 'write_aiger2' COMMAND IS EXPERIMENTAL.
```

10.263 write_blif - write design to BLIF file

yosys> help **write_blif**

```
    write_blif [options] [filename]

```

(continues on next page)

(continued from previous page)

```
Write the current design to an BLIF file.

    -top top_module
        set the specified module as design top module

    -buf <cell-type> <in-port> <out-port>
        use cells of type <cell-type> with the specified port names for buffers

    -unbuf <cell-type> <in-port> <out-port>
        replace buffer cells with the specified name and port names with
        a .names statement that models a buffer

    -true <cell-type> <out-port>
    -false <cell-type> <out-port>
    -undef <cell-type> <out-port>
        use the specified cell types to drive nets that are constant 1, 0, or
        undefined. when '-' is used as <cell-type>, then <out-port> specifies
        the wire name to be used for the constant signal and no cell driving
        that wire is generated. when '+' is used as <cell-type>, then <out-port>
        specifies the wire name to be used for the constant signal and a .names
        statement is generated to drive the wire.

    -noalias
        if a net name is aliasing another net name, then by default a net
        without fanout is created that is driven by the other net. This option
        suppresses the generation of this nets without fanout.

The following options can be useful when the generated file is not going to be
read by a BLIF parser but a custom tool. It is recommended not to name the
output file *.blif when any of these options are used.

    -icells
        do not translate Yosys's internal gates to generic BLIF logic
        functions. Instead create .subckt or .gate lines for all cells.

    -gates
        print .gate instead of .subckt lines for all cells that are not
        instantiations of other modules from this design.

    -conn
        do not generate buffers for connected wires. instead use the
        non-standard .conn statement.

    -attr
        use the non-standard .attr statement to write cell attributes

    -param
        use the non-standard .param statement to write cell parameters

    -cname
        use the non-standard .cname statement to write cell names
```

(continues on next page)

(continued from previous page)

```
    -iname, -iattr
        enable -cname and -attr functionality for .names statements
        (the .cname and .attr statements will be included in the BLIF
        output after the truth table for the .names statement)

    -blackbox
        write blackbox cells with .blackbox statement.

    -impltf
        do not write definitions for the $true, $false and $undef wires.
```

10.264 write_btor - write design to BTOR file

yosys> help **write_btor**

```
    write_btor [options] [filename]

Write a BTOR description of the current design.

  -v
    Add comments and indentation to BTOR output file

  -s
    Output only a single bad property for all asserts

  -c
    Output cover properties using 'bad' statements instead of asserts

  -i <filename>
    Create additional info file with auxiliary information

  -x
    Output symbols for internal netnames (starting with '$')

  -ywmap <filename>
    Create a map file for conversion to and from Yosys witness traces
```

10.265 write_cxxrtl - convert design to C++ RTL simulation

yosys> help **write_cxxrtl**

```
    write_cxxrtl [options] [filename]

Write C++ code that simulates the design. The generated code requires a driver
that instantiates the design, toggles its clock, and interacts with its ports.

The following driver may be used as an example for a design with a single clock
driving rising edge triggered flip-flops:
```

(continues on next page)

(continued from previous page)

```
    #include "top.cc"

    int main() {
      cxxrtl_design::p_top top;
      top.step();
      while (1) {
        /* user logic */
        top.p_clk.set(false);
        top.step();
        top.p_clk.set(true);
        top.step();
      }
    }
```

Note that CXXRTL simulations, just like the hardware they are simulating, are subject to race conditions. If, in the example above, the user logic would run simultaneously with the rising edge of the clock, the design would malfunction.

This backend supports replacing parts of the design with black boxes implemented in C++. If a module marked as a CXXRTL black box, its implementation is ignored, and the generated code consists only of an interface and a factory function. The driver must implement the factory function that creates an implementation of the black box, taking into account the parameters it is instantiated with.

For example, the following Verilog code defines a CXXRTL black box interface for a synchronous debug sink:

```
    (* cxxrtl_blackbox *)
    module debug(...);
      (* cxxrtl_edge = "p" *) input clk;
      input en;
      input [7:0] i_data;
      (* cxxrtl_sync *) output [7:0] o_data;
    endmodule
```

For this HDL interface, this backend will generate the following C++ interface:

```
    struct bb_p_debug : public module {
      value<1> p_clk;
      bool posedge_p_clk() const { /* ... */ }
      value<1> p_en;
      value<8> p_i_data;
      wire<8> p_o_data;

      bool eval(performer *performer) override;
      virtual bool commit(observer &observer);
      bool commit() override;

      static std::unique_ptr<bb_p_debug>
      create(std::string name, metadata_map parameters, metadata_map attributes);
    };
```

(continues on next page)

(continued from previous page)

```
The `create' function must be implemented by the driver. For example, it could
always provide an implementation logging the values to standard error stream:

    namespace cxxrtl_design {

    struct stderr_debug : public bb_p_debug {
      bool eval(performer *performer) override {
        if (posedge_p_clk() && p_en)
          fprintf(stderr, "debug: %02x\n", p_i_data.data[0]);
        p_o_data.next = p_i_data;
        return bb_p_debug::eval(performer);
      }
    };

    std::unique_ptr<bb_p_debug>
    bb_p_debug::create(std::string name, cxxrtl::metadata_map parameters,
                       cxxrtl::metadata_map attributes) {
      return std::make_unique<stderr_debug>();
    }

    }

For complex applications of black boxes, it is possible to parameterize their
port widths. For example, the following Verilog code defines a CXXRTL black box
interface for a configurable width debug sink:

    (* cxxrtl_blackbox, cxxrtl_template = "WIDTH" *)
    module debug(...);
      parameter WIDTH = 8;
      (* cxxrtl_edge = "p" *) input clk;
      input en;
      (* cxxrtl_width = "WIDTH" *) input [WIDTH - 1:0] i_data;
      (* cxxrtl_width = "WIDTH" *) output [WIDTH - 1:0] o_data;
    endmodule

For this parametric HDL interface, this backend will generate the following C++
interface (only the differences are shown):

    template<size_t WIDTH>
    struct bb_p_debug : public module {
      // ...
      value<WIDTH> p_i_data;
      wire<WIDTH> p_o_data;
      // ...
      static std::unique_ptr<bb_p_debug<WIDTH>>
      create(std::string name, metadata_map parameters, metadata_map attributes);
    };

The `create' function must be implemented by the driver, specialized for every
possible combination of template parameters. (Specialization is necessary to
enable separate compilation of generated code and black box implementations.)
```

(continues on next page)

(continued from previous page)

```
    template<size_t SIZE>
    struct stderr_debug : public bb_p_debug<SIZE> {
      // ...
    };

    template<>
    std::unique_ptr<bb_p_debug<8>>
    bb_p_debug<8>::create(std::string name, cxxrtl::metadata_map parameters,
                          cxxrtl::metadata_map attributes) {
      return std::make_unique<stderr_debug<8>>();
    }

The following attributes are recognized by this backend:

    cxxrtl_blackbox
        only valid on modules. if specified, the module contents are ignored,
        and the generated code includes only the module interface and a factory
        function, which will be called to instantiate the module.

    cxxrtl_edge
        only valid on inputs of black boxes. must be one of "p", "n", "a".
        if specified on signal `clk`, the generated code includes edge detectors
        `posedge_p_clk()` (if "p"), `negedge_p_clk()` (if "n"), or both (if
        "a"), simplifying implementation of clocked black boxes.

    cxxrtl_template
        only valid on black boxes. must contain a space separated sequence of
        identifiers that have a corresponding black box parameters. for each
        of them, the generated code includes a `size_t` template parameter.

    cxxrtl_width
        only valid on ports of black boxes. must be a constant expression, which
        is directly inserted into generated code.

    cxxrtl_comb, cxxrtl_sync
        only valid on outputs of black boxes. if specified, indicates that every
        bit of the output port is driven, correspondingly, by combinatorial or
        synchronous logic. this knowledge is used for scheduling optimizations.
        if neither is specified, the output will be pessimistically treated as
        driven by both combinatorial and synchronous logic.

The following options are supported by this backend:

    -print-wire-types, -print-debug-wire-types
        enable additional debug logging, for pass developers.

    -header
        generate separate interface (.h) and implementation (.cc) files.
        if specified, the backend must be called with a filename, and filename
        of the interface is derived from filename of the implementation.
        otherwise, interface and implementation are generated together.
```

(continues on next page)

(continued from previous page)

```
    -namespace <ns-name>
        place the generated code into namespace <ns-name>. if not specified,
        "cxxrtl_design" is used.

    -print-output <stream>
        $print cells in the generated code direct their output to <stream>.
        must be one of "std::cout", "std::cerr". if not specified,
        "std::cout" is used. explicitly provided performer overrides this.

    -nohierarchy
        use design hierarchy as-is. in most designs, a top module should be
        present as it is exposed through the C API and has unbuffered outputs
        for improved performance; it will be determined automatically if absent.

    -noflatten
        don't flatten the design. fully flattened designs can evaluate within
        one delta cycle if they have no combinatorial feedback.
        note that the debug interface and waveform dumps use full hierarchical
        names for all wires even in flattened designs.

    -noproc
        don't convert processes to netlists. in most designs, converting
        processes significantly improves evaluation performance at the cost of
        slight increase in compilation time.

    -O <level>
        set the optimization level. the default is -O6. higher optimization
        levels dramatically decrease compile and run time, and highest level
        possible for a design should be used.

    -O0
        no optimization.

    -O1
        unbuffer internal wires if possible.

    -O2
        like -O1, and localize internal wires if possible.

    -O3
        like -O2, and inline internal wires if possible.

    -O4
        like -O3, and unbuffer public wires not marked (*keep*) if possible.

    -O5
        like -O4, and localize public wires not marked (*keep*) if possible.

    -O6
        like -O5, and inline public wires not marked (*keep*) if possible.

    -g <level>
```

(continues on next page)

(continued from previous page)

```
        set the debug level. the default is -g4. higher debug levels provide
        more visibility and generate more code, but do not pessimize evaluation.

    -g0
        no debug information. the C API is disabled.

    -g1
        include bare minimum of debug information necessary to access all design
        state. the C API is enabled.

    -g2
        like -g1, but include debug information for all public wires that are
        directly accessible through the C++ interface.

    -g3
        like -g2, and include debug information for public wires that are tied
        to a constant or another public wire.

    -g4
        like -g3, and compute debug information on demand for all public wires
        that were optimized out.
```

10.266 write_edif - write design to EDIF netlist file

yosys> help **write_edif**

```
    write_edif [options] [filename]

Write the current design to an EDIF netlist file.

    -top top_module
        set the specified module as design top module

    -nogndvcc
        do not create "GND" and "VCC" cells. (this will produce an error
        if the design contains constant nets. use "hilomap" to map to custom
        constant drivers first)

    -gndvccy
        create "GND" and "VCC" cells with "Y" outputs. (the default is
        "G" for "GND" and "P" for "VCC".)

    -attrprop
        create EDIF properties for cell attributes

    -keep
        create extra KEEP nets by allowing a cell to drive multiple nets.

    -pvector {par|bra|ang}
        sets the delimiting character for module port rename clauses to
        parentheses, square brackets, or angle brackets.
```

(continues on next page)

(continued from previous page)

```
    -lsbidx
        use index 0 for the LSB bit of a net or port instead of MSB.

Unfortunately there are different "flavors" of the EDIF file format. This
command generates EDIF files for the Xilinx place&route tools. It might be
necessary to make small modifications to this command when a different tool
is targeted.
```

10.267 write_file - write a text to a file

yosys> help **write_file**

```
    write_file [options] output_file [input_file]

Write the text from the input file to the output file.

    -a
        Append to output file (instead of overwriting)


Inside a script the input file can also can a here-document:

    write_file hello.txt <<EOT
    Hello World!
    EOT
```

10.268 write_firrtl - write design to a FIRRTL file

yosys> help **write_firrtl**

```
    write_firrtl [options] [filename]

Write a FIRRTL netlist of the current design.
The following commands are executed by this command:
        pmuxtree
        bmuxmap
        demuxmap
        bwmuxmap
```

10.269 write_functional_cxx - convert design to C++ using the functional backend

yosys> help **write_functional_cxx**

```
TODO: add help message
```

10.270 write_functional_rosette - Generate Rosette compatible Racket from Functional IR

yosys> help **write_functional_rosette**

```
    write_functional_rosette [options] [filename]

Functional Rosette Backend.

    -provides
        include 'provide' statement(s) for loading output as a module
```

10.271 write_functional_smt2 - Generate SMT-LIB from Functional IR

yosys> help **write_functional_smt2**

```
Functional SMT Backend.
```

10.272 write_intersynth - write design to InterSynth netlist file

yosys> help **write_intersynth**

```
    write_intersynth [options] [filename]

Write the current design to an 'intersynth' netlist file. InterSynth is
a tool for Coarse-Grain Example-Driven Interconnect Synthesis.

    -notypes
        do not generate celltypes and conntypes commands. i.e. just output
        the netlists. this is used for postsilicon synthesis.

    -lib <verilog_or_rtlil_file>
        Use the specified library file for determining whether cell ports are
        inputs or outputs. This option can be used multiple times to specify
        more than one library.

    -selected
        only write selected modules. modules must be selected entirely or
        not at all.

http://bygone.clairexen.net/intersynth/
```

10.273 write_jny - generate design metadata

yosys> help **write_jny**

```
    jny [options] [selection]

```

(continues on next page)

(continued from previous page)

```
Write JSON netlist metadata for the current design

    -no-connections
        Don't include connection information in the netlist output.

    -no-attributes
        Don't include attributed information in the netlist output.

    -no-properties
        Don't include property information in the netlist output.

The JSON schema for JNY output files is located in the "jny.schema.json" file
which is located at "https://raw.githubusercontent.com/YosysHQ/yosys/main/misc/jny.
↪schema.json"
```

10.274 write_json - write design to a JSON file

yosys> help **write_json**

```
    write_json [options] [filename]

Write a JSON netlist of the current design.

    -aig
        include AIG models for the different gate types

    -compat-int
        emit 32-bit or smaller fully-defined parameter values directly
        as JSON numbers (for compatibility with old parsers)

    -selected
        output only select module

    -noscopeinfo
        don't include $scopeinfo cells in the output


The general syntax of the JSON output created by this command is as follows:

    {
      "creator": "Yosys <version info>",
      "modules": {
        <module_name>: {
          "attributes": {
            <attribute_name>: <attribute_value>,
            ...
          },
          "parameter_default_values": {
            <parameter_name>: <parameter_value>,
            ...
          },
```

(continues on next page)

(continued from previous page)

```
          "ports": {
            <port_name>: <port_details>,
            ...
          },
          "cells": {
            <cell_name>: <cell_details>,
            ...
          },
          "memories": {
            <memory_name>: <memory_details>,
            ...
          },
          "netnames": {
            <net_name>: <net_details>,
            ...
          }
        }
      },
      "models": {
        ...
      },
    }

Where <port_details> is:

    {
      "direction": <"input" | "output" | "inout">,
      "bits": <bit_vector>
      "offset": <the lowest bit index in use, if non-0>
      "upto": <1 if the port bit indexing is MSB-first>
      "signed": <1 if the port is signed>
    }

The "offset" and "upto" fields are skipped if their value would be 0.
They don't affect connection semantics, and are only used to preserve original
HDL bit indexing.
And <cell_details> is:

    {
      "hide_name": <1 | 0>,
      "type": <cell_type>,
      "model": <AIG model name, if -aig option used>,
      "parameters": {
        <parameter_name>: <parameter_value>,
        ...
      },
      "attributes": {
        <attribute_name>: <attribute_value>,
        ...
      },
      "port_directions": {
        <port_name>: <"input" | "output" | "inout">,
```

(continues on next page)

(continued from previous page)

```
      ...
    },
    "connections": {
      <port_name>: <bit_vector>,
      ...
    },
  }

And <memory_details> is:

  {
    "hide_name": <1 | 0>,
    "attributes": {
      <attribute_name>: <attribute_value>,
      ...
    },
    "width": <memory width>
    "start_offset": <the lowest valid memory address>
    "size": <memory size>
  }

And <net_details> is:

  {
    "hide_name": <1 | 0>,
    "bits": <bit_vector>
    "offset": <the lowest bit index in use, if non-0>
    "upto": <1 if the port bit indexing is MSB-first>
    "signed": <1 if the port is signed>
  }

The "hide_name" fields are set to 1 when the name of this cell or net is
automatically created and is likely not of interest for a regular user.

The "port_directions" section is only included for cells for which the
interface is known.

Module and cell ports and nets can be single bit wide or vectors of multiple
bits. Each individual signal bit is assigned a unique integer. The <bit_vector>
values referenced above are vectors of this integers. Signal bits that are
connected to a constant driver are denoted as string "0", "1", "x", or
"z" instead of a number.

Bit vectors (including integers) are written as string holding the binary
representation of the value. Strings are written as strings, with an appended
blank in cases of strings of the form /[01xz]* */.

For example the following Verilog code:

  module test(input x, y);
    (* keep *) foo #(.P(42), .Q(1337))
        foo_inst (.A({x, y}), .B({y, x}), .C({4'd10, {4{x}}}));
```

(continues on next page)

(continued from previous page)

```
    endmodule

Translates to the following JSON output:

    {
      "creator": "Yosys 0.9+2406 (git sha1 fb1168d8, clang 9.0.1 -fPIC -Os)",
      "modules": {
        "test": {
          "attributes": {
            "cells_not_processed": "00000000000000000000000000000001",
            "src": "test.v:1.1-4.10"
          },
          "ports": {
            "x": {
              "direction": "input",
              "bits": [ 2 ]
            },
            "y": {
              "direction": "input",
              "bits": [ 3 ]
            }
          },
          "cells": {
            "foo_inst": {
              "hide_name": 0,
              "type": "foo",
              "parameters": {
                "P": "00000000000000000000000000101010",
                "Q": "00000000000000000000010100111001"
              },
              "attributes": {
                "keep": "00000000000000000000000000000001",
                "module_not_derived": "00000000000000000000000000000001",
                "src": "test.v:3.1-3.55"
              },
              "connections": {
                "A": [ 3, 2 ],
                "B": [ 2, 3 ],
                "C": [ 2, 2, 2, 2, "0", "1", "0", "1" ]
              }
            }
          },
          "netnames": {
            "x": {
              "hide_name": 0,
              "bits": [ 2 ],
              "attributes": {
                "src": "test.v:1.19-1.20"
              }
            },
            "y": {
              "hide_name": 0,
```

(continues on next page)

(continued from previous page)

```
              "bits": [ 3 ],
              "attributes": {
                "src": "test.v:1.22-1.23"
              }
            }
          }
        }
      }
    }

The models are given as And-Inverter-Graphs (AIGs) in the following form:

    "models": {
      <model_name>: [
        /*   0 */ [ <node-spec> ],
        /*   1 */ [ <node-spec> ],
        /*   2 */ [ <node-spec> ],
        ...
      ],
      ...
    },

The following node-types may be used:

    [ "port", <portname>, <bitindex>, <out-list> ]
      - the value of the specified input port bit

    [ "nport", <portname>, <bitindex>, <out-list> ]
      - the inverted value of the specified input port bit

    [ "and", <node-index>, <node-index>, <out-list> ]
      - the ANDed value of the specified nodes

    [ "nand", <node-index>, <node-index>, <out-list> ]
      - the inverted ANDed value of the specified nodes

    [ "true", <out-list> ]
      - the constant value 1

    [ "false", <out-list> ]
      - the constant value 0

All nodes appear in topological order. I.e. only nodes with smaller indices
are referenced by "and" and "nand" nodes.

The optional <out-list> at the end of a node specification is a list of
output portname and bitindex pairs, specifying the outputs driven by this node.

For example, the following is the model for a 3-input 3-output $reduce_and cell
inferred by the following code:

    module test(input [2:0] in, output [2:0] out);
```

(continues on next page)

(continued from previous page)

```
      assign in = &out;
    endmodule

    "$reduce_and:3U:3": [
      /*   0 */ [ "port", "A", 0 ],
      /*   1 */ [ "port", "A", 1 ],
      /*   2 */ [ "and", 0, 1 ],
      /*   3 */ [ "port", "A", 2 ],
      /*   4 */ [ "and", 2, 3, "Y", 0 ],
      /*   5 */ [ "false", "Y", 1, "Y", 2 ]
    ]

Future version of Yosys might add support for additional fields in the JSON
format. A program processing this format must ignore all unknown fields.
```

10.275 write_rtlil - write design to RTLIL file

yosys> help **write_rtlil**

```
    write_rtlil [filename]

Write the current design to an RTLIL file. (RTLIL is a text representation
of a design in yosys's internal format.)

    -selected
        only write selected parts of the design.
```

10.276 write_simplec - convert design to simple C code

yosys> help **write_simplec**

```
    write_simplec [options] [filename]

Write simple C code for simulating the design. The C code written can be used to
simulate the design in a C environment, but the purpose of this command is to
generate code that works well with C-based formal verification.

    -verbose
        this will print the recursive walk used to export the modules.

    -i8, -i16, -i32, -i64
        set the maximum integer bit width to use in the generated code.

THIS COMMAND IS UNDER CONSTRUCTION
```

10.277 write_smt2 - write design to SMT-LIBv2 file

yosys> help **write_smt2**

```
    write_smt2 [options] [filename]

Write a SMT-LIBv2 [1] description of the current design. For a module with name
'<mod>' this will declare the sort '<mod>_s' (state of the module) and will
define and declare functions operating on that state.

The following SMT2 functions are generated for a module with name '<mod>'.
Some declarations/definitions are printed with a special comment. A prover
using the SMT2 files can use those comments to collect all relevant metadata
about the design.

    ; yosys-smt2-module <mod>
    (declare-sort |<mod>_s| 0)
        The sort representing a state of module <mod>.

    (define-fun |<mod>_h| ((state |<mod>_s|)) Bool (...))
        This function must be asserted for each state to establish the
        design hierarchy.

    ; yosys-smt2-input <wirename> <width>
    ; yosys-smt2-output <wirename> <width>
    ; yosys-smt2-register <wirename> <width>
    ; yosys-smt2-wire <wirename> <width>
    (define-fun |<mod>_n <wirename>| (|<mod>_s|) (_ BitVec <width>))
    (define-fun |<mod>_n <wirename>| (|<mod>_s|) Bool)
        For each port, register, and wire with the 'keep' attribute set an
        accessor function is generated. Single-bit wires are returned as Bool,
        multi-bit wires as BitVec.

    ; yosys-smt2-cell <submod> <instancename>
    (declare-fun |<mod>_h <instancename>| (|<mod>_s|) |<submod>_s|)
        There is a function like that for each hierarchical instance. It
        returns the sort that represents the state of the sub-module that
        implements the instance.

    (declare-fun |<mod>_is| (|<mod>_s|) Bool)
        This function must be asserted 'true' for initial states, and 'false'
        otherwise.

    (define-fun |<mod>_i| ((state |<mod>_s|)) Bool (...))
        This function must be asserted 'true' for initial states. For
        non-initial states it must be left unconstrained.

    (define-fun |<mod>_t| ((state |<mod>_s|) (next_state |<mod>_s|)) Bool (...))
        This function evaluates to 'true' if the states 'state' and
        'next_state' form a valid state transition.

    (define-fun |<mod>_a| ((state |<mod>_s|)) Bool (...))
        This function evaluates to 'true' if all assertions hold in the state.
```

(continues on next page)

(continued from previous page)

```
    (define-fun |<mod>_u| ((state |<mod>_s|)) Bool (...))
        This function evaluates to 'true' if all assumptions hold in the state.

    ; yosys-smt2-assert <id> <filename:linenum>
    (define-fun |<mod>_a <id>| ((state |<mod>_s|)) Bool (...))
        Each $assert cell is converted into one of this functions. The function
        evaluates to 'true' if the assert statement holds in the state.

    ; yosys-smt2-assume <id> <filename:linenum>
    (define-fun |<mod>_u <id>| ((state |<mod>_s|)) Bool (...))
        Each $assume cell is converted into one of this functions. The function
        evaluates to 'true' if the assume statement holds in the state.

    ; yosys-smt2-cover <id> <filename:linenum>
    (define-fun |<mod>_c <id>| ((state |<mod>_s|)) Bool (...))
        Each $cover cell is converted into one of this functions. The function
        evaluates to 'true' if the cover statement is activated in the state.

Options:

    -verbose
        this will print the recursive walk used to export the modules.

    -stbv
        Use a BitVec sort to represent a state instead of an uninterpreted
        sort. As a side-effect this will prevent use of arrays to model
        memories.

    -stdt
        Use SMT-LIB 2.6 style datatypes to represent a state instead of an
        uninterpreted sort.

    -nobv
        disable support for BitVec (FixedSizeBitVectors theory). without this
        option multi-bit wires are represented using the BitVec sort and
        support for coarse grain cells (incl. arithmetic) is enabled.

    -nomem
        disable support for memories (via ArraysEx theory). this option is
        implied by -nobv. only $mem cells without merged registers in
        read ports are supported. call "memory" with -nordff to make sure
        that no registers are merged into $mem read ports. '<mod>_m' functions
        will be generated for accessing the arrays that are used to represent
        memories.

    -wires
        create '<mod>_n' functions for all public wires. by default only ports,
        registers, and wires with the 'keep' attribute are exported.

    -tpl <template_file>
        use the given template file. the line containing only the token '%%'
```

(continues on next page)

(continued from previous page)

```
        is replaced with the regular output of this command.

    -solver-option <option> <value>
        emit a `; yosys-smt2-solver-option` directive for yosys-smtbmc to write
        the given option as a `(set-option ...)` command in the SMT-LIBv2.

[1] For more information on SMT-LIBv2 visit http://smt-lib.org/ or read David
R. Cok's tutorial: https://smtlib.github.io/jSMTLIB/SMTLIBTutorial.pdf

--------------------------------------------------------------------------------

Example:

Consider the following module (test.v). We want to prove that the output can
never transition from a non-zero value to a zero value.

        module test(input clk, output reg [3:0] y);
          always @(posedge clk)
            y <= (y << 1) | ^y;
        endmodule

For this proof we create the following template (test.tpl).

        ; we need QF_UFBV for this proof
        (set-logic QF_UFBV)

        ; insert the auto-generated code here
        %%

        ; declare two state variables s1 and s2
        (declare-fun s1 () test_s)
        (declare-fun s2 () test_s)

        ; state s2 is the successor of state s1
        (assert (test_t s1 s2))

        ; we are looking for a model with y non-zero in s1
        (assert (distinct (|test_n y| s1) #b0000))

        ; we are looking for a model with y zero in s2
        (assert (= (|test_n y| s2) #b0000))

        ; is there such a model?
        (check-sat)

The following yosys script will create a 'test.smt2' file for our proof:

        read_verilog test.v
        hierarchy -check; proc; opt; check -assert
        write_smt2 -bv -tpl test.tpl test.smt2

Running 'cvc4 test.smt2' will print 'unsat' because y can never transition
```

(continues on next page)

(continued from previous page)

```
from non-zero to zero in the test design.
```

10.278 write_smv - write design to SMV file

yosys> help **write_smv**

```
    write_smv [options] [filename]

Write an SMV description of the current design.

    -verbose
        this will print the recursive walk used to export the modules.

    -tpl <template_file>
        use the given template file. the line containing only the token '%%'
        is replaced with the regular output of this command.

THIS COMMAND IS UNDER CONSTRUCTION
```

10.279 write_spice - write design to SPICE netlist file

yosys> help **write_spice**

```
    write_spice [options] [filename]

Write the current design to an SPICE netlist file.

    -big_endian
        generate multi-bit ports in MSB first order
        (default is LSB first)

    -neg net_name
        set the net name for constant 0 (default: Vss)

    -pos net_name
        set the net name for constant 1 (default: Vdd)

    -buf DC|subckt_name
        set the name for jumper element (default: DC)
        (used to connect different nets)

    -nc_prefix
        prefix for not-connected nets (default: _NC)

    -inames
        include names of internal ($-prefixed) nets in outputs
        (default is to use net numbers instead)

    -top top_module
        set the specified module as design top module
```

10.280 write_table - write design as connectivity table

yosys> help **write_table**

```
    write_table [options] [filename]

Write the current design as connectivity table. The output is a tab-separated
ASCII table with the following columns:

  module name
  cell name
  cell type
  cell port
  direction
  signal

module inputs and outputs are output using cell type and port '-' and with
'pi' (primary input) or 'po' (primary output) or 'pio' as direction.
```

10.281 write_verilog - write design to Verilog file

yosys> help **write_verilog**

```
    write_verilog [options] [filename]

Write the current design to a Verilog file.

    -sv
        with this option, SystemVerilog constructs like always_comb are used

    -norename
        without this option all internal object names (the ones with a dollar
        instead of a backslash prefix) are changed to short names in the
        format '_<number>_'.

    -renameprefix <prefix>
        insert this prefix in front of auto-generated instance names

    -noattr
        with this option no attributes are included in the output

    -attr2comment
        with this option attributes are included as comments in the output

    -noexpr
        without this option all internal cells are converted to Verilog
        expressions.

    -noparallelcase
        With this option no parallel_case attributes are used. Instead, a case
        statement that assigns don't-care values for priority dependent inputs
        is generated.
```

(continues on next page)

(continued from previous page)

```
-siminit
    add initial statements with hierarchical refs to initialize FFs when
    in -noexpr mode.

-nodec
    32-bit constant values are by default dumped as decimal numbers,
    not bit pattern. This option deactivates this feature and instead
    will write out all constants in binary.

-decimal
    dump 32-bit constants in decimal and without size and radix

-nohex
    constant values that are compatible with hex output are usually
    dumped as hex values. This option deactivates this feature and
    instead will write out all constants in binary.

-nostr
    Parameters and attributes that are specified as strings in the
    original input will be output as strings by this back-end. This
    deactivates this feature and instead will write string constants
    as binary numbers.

-simple-lhs
    Connection assignments with simple left hand side without
    concatenations.

-extmem
    instead of initializing memories using assignments to individual
    elements, use the '$readmemh' function to read initialization data
    from a file. This data is written to a file named by appending
    a sequential index to the Verilog filename and replacing the extension
    with '.mem', e.g. 'write_verilog -extmem foo.v' writes 'foo-1.mem',
    'foo-2.mem' and so on.

-defparam
    use 'defparam' statements instead of the Verilog-2001 syntax for
    cell parameters.

-blackboxes
    usually modules with the 'blackbox' attribute are ignored. with
    this option set only the modules with the 'blackbox' attribute
    are written to the output file.

-selected
    only write selected modules. modules must be selected entirely or
    not at all.

-v
    verbose output (print new names of all renamed wires and cells)
```

(continues on next page)

(continued from previous page)

```
Note that RTLIL processes can't always be mapped directly to Verilog
always blocks. This frontend should only be used to export an RTLIL
netlist, i.e. after the "proc" pass has been used to convert all
processes to logic networks and registers. A warning is generated when
this command is called on a design with RTLIL processes.
```

10.282 write_xaiger - write design to XAIGER file

yosys> help **write_xaiger**

```
    write_xaiger [options] [filename]

Write the top module (according to the (* top *) attribute or if only one module
is currently selected) to an XAIGER file. Any non $_NOT_, $_AND_, (optionally
$_DFF_N_, $_DFF_P_), or non (* abc9_box *) cells will be converted into psuedo-
inputs and pseudo-outputs. Whitebox contents will be taken from the equivalent
module in the '$abc9_holes' design, if it exists.

    -ascii
        write ASCII version of AIGER format

    -map <filename>
        write an extra file with port and box symbols

    -dff
        write $_DFF_[NP]_ cells
```

10.283 write_xaiger2 - (experimental) write module to XAIGER file

yosys> help **write_xaiger2**

```
    write_xaiger2 [options] [filename]

Write the selected module to a XAIGER file including the 'h' and 'a' extensions
with box information for ABC.

    -strash
        perform structural hashing while writing

    -flatten
        allow descending into submodules and write a flattened view of the design
        hierarchy starting at the selected top

    -mapping_prep
        after the file is written, prepare the module for reintegration of
        a mapping in a subsequent command. all cells which are not blackboxed nor
        whiteboxed are removed from the design as well as all wires which only
        connect to removed cells
        (conflicts with -flatten)
```

(continues on next page)

(continued from previous page)

```
    -map2 <file>
        write a map2 file which 'read_xaiger2 -sc_mapping' can read to
        reintegrate a mapping
        (conflicts with -flatten)


WARNING: THE 'write_xaiger2' COMMAND IS EXPERIMENTAL.
```

10.284 xilinx_dffopt - Xilinx: optimize FF control signal usage

yosys> help **xilinx_dffopt**

```
    xilinx_dffopt [options] [selection]

Converts hardware clock enable and set/reset signals on FFs to emulation
using LUTs, if doing so would improve area.  Operates on post-techmap Xilinx
cells (LUT*, FD*).

    -lut4
        Assume a LUT4-based device (instead of a LUT6-based device).
```

10.285 xilinx_dsp - Xilinx: pack resources into DSPs

yosys> help **xilinx_dsp**

```
    xilinx_dsp [options] [selection]

Pack input registers (A2, A1, B2, B1, C, D, AD; with optional enable/reset),
pipeline registers (M; with optional enable/reset), output registers (P; with
optional enable/reset), pre-adder and/or post-adder into Xilinx DSP resources.

Multiply-accumulate operations using the post-adder with feedback on the 'C'
input will be folded into the DSP. In this scenario only, the 'C' input can be
used to override the current accumulation result with a new value, which will
be added to the multiplier result to form the next accumulation result.

Use of the dedicated 'PCOUT' -> 'PCIN' cascade path is detected for 'P' -> 'C'
connections (optionally, where 'P' is right-shifted by 17-bits and used as an
input to the post-adder -- a pattern common for summing partial products to
implement wide multipliers). Limited support also exists for similar cascading
for A and B using '[AB]COUT' -> '[AB]CIN'. Currently, cascade chains are limited
to a maximum length of 20 cells, corresponding to the smallest Xilinx 7 Series
device.

This pass is a no-op if the scratchpad variable 'xilinx_dsp.multonly' is set
to 1.
```

(continues on next page)

(continued from previous page)

```
Experimental feature: addition/subtractions less than 12 or 24 bits with the
'(* use_dsp="simd" *)' attribute attached to the output wire or attached to
the add/subtract operator will cause those operations to be implemented using
the 'SIMD' feature of DSPs.

Experimental feature: the presence of a `$ge' cell attached to the registered
P output implementing the operation "(P >= <power-of-2>)" will be transformed
into using the DSP48E1's pattern detector feature for overflow detection.

    -family {xcup|xcu|xc7|xc6v|xc5v|xc4v|xc6s|xc3sda}
        select the family to target
        default: xc7
```

10.286 xilinx_srl - Xilinx shift register extraction

yosys> help **xilinx_srl**

```
    xilinx_srl [options] [selection]

This pass converts chains of built-in flops (bit-level: $_DFF_[NP]_, $_DFFE_*
and word-level: $dff, $dffe) as well as Xilinx flops (FDRE, FDRE_1) into a
$__XILINX_SHREG cell. Chains must be of the same cell type, clock, clock
polarity, enable, and enable polarity (where relevant).
Flops with resets cannot be mapped to Xilinx devices and will not be inferred.

    -minlen N
        min length of shift register (default = 3)

    -fixed
        infer fixed-length shift registers.

    -variable
        infer variable-length shift registers (i.e. fixed-length shifts where
        each element also fans-out to a $shiftx cell).
```

10.287 xprop - formal x propagation

yosys> help **xprop**

```
    xprop [options] [selection]

This pass transforms the circuit into an equivalent circuit that explicitly
encodes the propagation of x values using purely 2-valued logic. On the
interface between xprop-transformed and non-transformed parts of the design,
appropriate conversions are inserted automatically.

    -split-inputs
    -split-outputs
    -split-ports
```

(continues on next page)

(continued from previous page)

```
        Replace each input/output/port with two new ports, one carrying the
        defined values (named <portname>_d) and one carrying the mask of which
        bits are x (named <portname>_x). When a bit in the <portname>_x is set
        the corresponding bit in <portname>_d is ignored for inputs and
        guaranteed to be 0 for outputs.

    -split-public
        Replace each public non-port wire with two new wires, one carrying the
        defined values (named <wirename>_d) and one carrying the mask of which
        bits are x (named <wirename>_x). When a bit in the <portname>_x is set
        the corresponding bit in <wirename>_d is guaranteed to be 0 for
        outputs.

    -assume-encoding
        Add encoding invariants as assumptions. This can speed up formal
        verification tasks.

    -assert-encoding
        Add encoding invariants as assertions. Used for testing the xprop
        pass itself.

    -assume-def-inputs
        Assume all inputs are fully defined. This adds corresponding
        assumptions to the design and uses these assumptions to optimize the
        xprop encoding.

    -required
        Produce a runtime error if any encountered cell could not be encoded.

    -formal
        Produce a runtime error if any encoded cell uses a signal that is
           neither known to be non-x nor driven by another encoded cell.

    -debug-asserts
        Add assertions checking that the encoding used by this pass never
        produces x values within the encoded signals.
```

10.288 zinit - add inverters so all FF are zero-initialized

yosys> help **zinit**

```
    zinit [options] [selection]

Add inverters as needed to make all FFs zero-initialized.

    -all
        also add zero initialization to uninitialized FFs
```

BIBLIOGRAPHY

[ASU86] Alfred V. Aho, Ravi Sethi, and Jeffrey D. Ullman. *Compilers: principles, techniques, and tools*. Addison-Wesley Longman Publishing Co., Inc., Boston, MA, USA, 1986. ISBN 0-201-10088-6.

[A+02] IEEE Standards Association and others. Ieee standard for verilog register transfer level synthesis. *IEEE Std 1364.1-2002*, 2002. doi:10.1109/IEEESTD.2002.94220.

[A+04] IEEE Standards Association and others. Ieee standard for vhdl register transfer level (rtl) synthesis. *IEEE Std 1076.6-2004 (Revision of IEEE Std 1076.6-1999)*, 2004. doi:10.1109/IEEESTD.2004.94802.

[A+06] IEEE Standards Association and others. Ieee standard for verilog hardware description language. *IEEE Std 1364-2005 (Revision of IEEE Std 1364-2001)*, 2006. doi:10.1109/IEEESTD.2006.99495.

[A+09] IEEE Standards Association and others. Ieee standard vhdl language reference manual. *IEEE Std 1076-2008 (Revision of IEEE Std 1076-2002)*, 26 2009. doi:10.1109/IEEESTD.2009.4772740.

[A+10] IEEE Standards Association and others. Ieee standard for ip-xact, standard structure for packaging, integrating, and reusing ip within tools flows. *IEEE Std 1685-2009*, pages C1–360, 2010. doi:10.1109/IEEESTD.2010.5417309.

[BHSV90] R.K. Brayton, G.D. Hachtel, and A.L. Sangiovanni-Vincentelli. Multilevel logic synthesis. *Proceedings of the IEEE*, 78(2):264–300, 1990. doi:10.1109/5.52213.

[CI00] Clifford E. Cummings and Sunburst Design Inc. Nonblocking assignments in verilog synthesis, coding styles that kill. In *SNUG (Synopsys Users Group) 2000 User Papers, section-MC1 (1 st paper*. 2000.

[EenSorensson03] Niklas Eén and Niklas Sörensson. Temporal induction by incremental sat solving. *Electronic Notes in Theoretical Computer Science*, 89(4):543–560, 2003.

[GW13] Johann Glaser and C. Wolf. Methodology and example-driven interconnect synthesis for designing heterogeneous coarse-grain reconfigurable architectures. In Jan Haase, editor, *Advances in Models, Methods, and Tools for Complex Chip Design — Selected contributions from FDL'12*. Springer, 2013.

[HS96] G D Hachtel and F Somenzi. Logic synthesis and verification algorithms. 1996.

[LHBB85] Kyu Y. Lee, Michael Holley, Mary Bailey, and Walter Bright. A high-level design language for programmable logic devices. *VLSI Design (Manhasset NY: CPM Publications)*, pages 50–62, June 1985.

[STGR10] Yiqiong Shi, Chan Wai Ting, Bah-Hwee Gwee, and Ye Ren. A highly efficient method for extracting fsms from flattened gate-level netlist. In *Circuits and Systems (ISCAS), Proceedings of 2010 IEEE International Symposium on*, 2610–2613. 2010. doi:10.1109/ISCAS.2010.5537093.

[Ull76] J. R. Ullmann. An algorithm for subgraph isomorphism. *J. ACM*, 23(1):31–42, January 1976. doi:10.1145/321921.321925.

[Wol13] C. Wolf. Design and implementation of the yosys open synthesis suite. Bachelor Thesis, Vienna University of Technology, 2013.

[WGS+12] C. Wolf, Johann Glaser, Florian Schupfer, Jan Haase, and Christoph Grimm. Example-driven interconnect synthesis for heterogeneous coarse-grain reconfigurable logic. In *FDL Proceeding of the 2012 Forum on Specification and Design Languages*, 194–201. 2012.

PROPERTY INDEX

is_

is_evaluable, 390
$alu, 287
$fa, 288
$lcu, 289
$macc, 290
$macc_v2, 293
$add, 240
$and, 241
$bweqx, 242
$div, 242
$divfloor, 243
$eq, 244
$eqx, 244
$ge, 245
$gt, 245
$le, 246
$logic_and, 247
$logic_or, 247
$lt, 248
$mod, 248
$modfloor, 249
$mul, 250
$ne, 251
$nex, 251
$or, 252
$pow, 252
$shift, 253
$shiftx, 254
$shl, 255
$shr, 255
$sshl, 256
$sshr, 256
$sub, 257
$xnor, 258
$xor, 258
$_ANDNOT_, 317
$_AOI3_, 318
$_AOI4_, 318
$_MUX16_, 319
$_MUX4_, 320
$_MUX8_, 320
$_NMUX_, 321
$_OAI3_, 321
$_OAI4_, 322
$_ORNOT_, 323
$_AND_, 313
$_BUF_, 313
$_MUX_, 314
$_NAND_, 314
$_NOR_, 314
$_NOT_, 315
$_OR_, 315
$_XNOR_, 316
$_XOR_, 316
$allconst, 302
$allseq, 302
$anyconst, 302
$anyseq, 303
$assert, 304
$assume, 304
$cover, 304
$equiv, 305
$fair, 305
$initstate, 306
$live, 306
$_TBUF_, 389
$lut, 295
$sop, 296
$bmux, 259
$bwmux, 260
$demux, 260
$mux, 261
$pmux, 261
$tribuf, 262
$specify2, 297
$specify3, 298
$specrule, 301
$buf, 234
$logic_not, 234
$neg, 235
$not, 235
$pos, 236
$reduce_and, 236

$reduce_bool, 237
$reduce_or, 237
$reduce_xnor, 238
$reduce_xor, 238
$concat, 311
$slice, 312

X-

x-aware, 390
$bweqx, 242
$eqx, 244
$nex, 251
x-output, 390
$div, 242
$mod, 248
$shiftx, 254
$pmux, 261

INTERNAL CELL REFERENCE

Internal cell

$alu, 287
$fa, 288
$lcu, 289
$macc, 290
$macc_v2, 293
$add, 240
$and, 241
$bweqx, 242
$div, 242
$divfloor, 243
$eq, 244
$eqx, 244
$ge, 245
$gt, 245
$le, 246
$logic_and, 247
$logic_or, 247
$lt, 248
$mod, 248
$modfloor, 249
$mul, 250
$ne, 251
$nex, 251
$or, 252
$pow, 252
$shift, 253
$shiftx, 254
$shl, 255
$shr, 255
$sshl, 256
$sshr, 256
$sub, 257
$xnor, 258
$xor, 258
$_ANDNOT_, 317
$_AOI3_, 318
$_AOI4_, 318
$_MUX16_, 319
$_MUX4_, 320
$_MUX8_, 320
$_NMUX_, 321
$_OAI3_, 321
$_OAI4_, 322
$_ORNOT_, 323
$_AND_, 313
$_BUF_, 313
$_MUX_, 314
$_NAND_, 314
$_NOR_, 314
$_NOT_, 315
$_OR_, 315
$_XNOR_, 316
$_XOR_, 316
$check, 309
$print, 309
$scopeinfo, 310
$allconst, 302
$allseq, 302
$anyconst, 302
$anyinit, 303
$anyseq, 303
$assert, 304
$assume, 304
$cover, 304
$equiv, 305
$fair, 305
$ff, 305
$initstate, 306
$live, 306
$future_ff, 307
$get_tag, 307
$original_tag, 307
$overwrite_tag, 307
$set_tag, 308
$fsm, 285
$_TBUF_, 389
$lut, 295
$sop, 296
$mem, 276
$mem_v2, 278
$meminit, 281
$meminit_v2, 282
$memrd, 282

$memrd_v2, 283
$memwr, 283
$memwr_v2, 284
$bmux, 259
$bwmux, 260
$demux, 260
$mux, 261
$pmux, 261
$tribuf, 262
$adff, 264
$adffe, 265
$adlatch, 265
$aldff, 266
$aldffe, 266
$dff, 267
$dffe, 267
$dffsr, 268
$dffsre, 269
$dlatch, 269
$dlatchsr, 270
$sdff, 270
$sdffce, 271
$sdffe, 271
$sr, 272
$_ALDFFE_NNN_, 326
$_ALDFFE_NNP_, 327
$_ALDFFE_NPN_, 327
$_ALDFFE_NPP_, 328
$_ALDFFE_PNN_, 328
$_ALDFFE_PNP_, 329
$_ALDFFE_PPN_, 329
$_ALDFFE_PPP_, 329
$_ALDFF_NN_, 330
$_ALDFF_NP_, 330
$_ALDFF_PN_, 331
$_ALDFF_PP_, 331
$_DFFE_NNON_, 332
$_DFFE_NNOP_, 332
$_DFFE_NN1N_, 333
$_DFFE_NN1P_, 333
$_DFFE_NN_, 334
$_DFFE_NPON_, 334
$_DFFE_NPOP_, 334
$_DFFE_NP1N_, 335
$_DFFE_NP1P_, 335
$_DFFE_NP_, 336
$_DFFE_PNON_, 336
$_DFFE_PNOP_, 337
$_DFFE_PN1N_, 337
$_DFFE_PN1P_, 337
$_DFFE_PN_, 338
$_DFFE_PPON_, 338
$_DFFE_PPOP_, 339
$_DFFE_PP1N_, 339
$_DFFE_PP1P_, 340
$_DFFE_PP_, 340
$_DFFSRE_NNNN_, 340
$_DFFSRE_NNNP_, 341
$_DFFSRE_NNPN_, 342
$_DFFSRE_NNPP_, 342
$_DFFSRE_NPNN_, 343
$_DFFSRE_NPNP_, 343
$_DFFSRE_NPPN_, 344
$_DFFSRE_NPPP_, 344
$_DFFSRE_PNNN_, 345
$_DFFSRE_PNNP_, 345
$_DFFSRE_PNPN_, 346
$_DFFSRE_PNPP_, 346
$_DFFSRE_PPNN_, 347
$_DFFSRE_PPNP_, 347
$_DFFSRE_PPPN_, 348
$_DFFSRE_PPPP_, 348
$_DFFSR_NNN_, 349
$_DFFSR_NNP_, 349
$_DFFSR_NPN_, 350
$_DFFSR_NPP_, 350
$_DFFSR_PNN_, 351
$_DFFSR_PNP_, 351
$_DFFSR_PPN_, 352
$_DFFSR_PPP_, 352
$_DFF_NNO_, 353
$_DFF_NN1_, 353
$_DFF_NPO_, 354
$_DFF_NP1_, 354
$_DFF_N_, 355
$_DFF_PNO_, 355
$_DFF_PN1_, 356
$_DFF_PPO_, 356
$_DFF_PP1_, 356
$_DFF_P_, 357
$_FF_, 357
$_SDFFCE_NNON_, 358
$_SDFFCE_NNOP_, 358
$_SDFFCE_NN1N_, 359
$_SDFFCE_NN1P_, 359
$_SDFFCE_NPON_, 360
$_SDFFCE_NPOP_, 360
$_SDFFCE_NP1N_, 361
$_SDFFCE_NP1P_, 361
$_SDFFCE_PNON_, 362
$_SDFFCE_PNOP_, 362
$_SDFFCE_PN1N_, 363
$_SDFFCE_PN1P_, 363
$_SDFFCE_PPON_, 364
$_SDFFCE_PPOP_, 364
$_SDFFCE_PP1N_, 365
$_SDFFCE_PP1P_, 365
$_SDFFE_NNON_, 366

$_SDFFE_NN0P_, 366
$_SDFFE_NN1N_, 367
$_SDFFE_NN1P_, 367
$_SDFFE_NP0N_, 368
$_SDFFE_NP0P_, 368
$_SDFFE_NP1N_, 369
$_SDFFE_NP1P_, 369
$_SDFFE_PN0N_, 370
$_SDFFE_PN0P_, 370
$_SDFFE_PN1N_, 371
$_SDFFE_PN1P_, 371
$_SDFFE_PP0N_, 372
$_SDFFE_PP0P_, 372
$_SDFFE_PP1N_, 373
$_SDFFE_PP1P_, 373
$_SDFF_NN0_, 374
$_SDFF_NN1_, 374
$_SDFF_NP0_, 375
$_SDFF_NP1_, 375
$_SDFF_PN0_, 376
$_SDFF_PN1_, 376
$_SDFF_PP0_, 376
$_SDFF_PP1_, 377
$_DLATCHSR_NNN_, 379
$_DLATCHSR_NNP_, 379
$_DLATCHSR_NPN_, 380
$_DLATCHSR_NPP_, 380
$_DLATCHSR_PNN_, 381
$_DLATCHSR_PNP_, 381
$_DLATCHSR_PPN_, 382
$_DLATCHSR_PPP_, 382
$_DLATCH_NN0_, 383
$_DLATCH_NN1_, 383
$_DLATCH_NP0_, 384
$_DLATCH_NP1_, 384
$_DLATCH_N_, 385
$_DLATCH_PN0_, 385
$_DLATCH_PN1_, 386
$_DLATCH_PP0_, 386
$_DLATCH_PP1_, 386
$_DLATCH_P_, 387
$_SR_NN_, 387
$_SR_NP_, 388
$_SR_PN_, 388
$_SR_PP_, 389
$specify2, 297
$specify3, 298
$specrule, 301
$buf, 234
$logic_not, 234
$neg, 235
$not, 235
$pos, 236
$reduce_and, 236
$reduce_bool, 237
$reduce_or, 237
$reduce_xnor, 238
$reduce_xor, 238
$concat, 311
$slice, 312

COMMAND REFERENCE

Command

abc, 393
abc9, 396
abc9_exe, 399
abc9_ops, 401
abc_new, 403
abstract, 404
add, 405
aigmap, 406
alumacc, 406
anlogic_eqn, 406
anlogic_fixcarry, 407
assertpmux, 407
async2sync, 407
attrmap, 407
attrmvcp, 408
autoname, 409
blackbox, 409
bmuxmap, 409
booth, 409
box_derive, 410
bufnorm, 410
bugpoint, 412
bwmuxmap, 413
cd, 413
cellmatch, 414
check, 414
chformal, 415
chparam, 416
chtype, 416
clean, 416
clean_zerowidth, 417
clk2fflogic, 417
clkbufmap, 417
clockgate, 418
connect, 419
connect_rpc, 419
connwrappers, 420
coolrunner2_fixup, 421
coolrunner2_sop, 421
copy, 421
cover, 421
cutpoint, 422
debug, 422
delete, 423
deminout, 423
demuxmap, 423
design, 423
dffinit, 425
dfflegalize, 425
dfflibmap, 426
dffunmap, 427
dft_tag, 427
dump, 428
echo, 428
edgetypes, 428
efinix_fixcarry, 429
equiv_add, 429
equiv_induct, 429
equiv_make, 430
equiv_mark, 430
equiv_miter, 430
equiv_opt, 431
equiv_purge, 432
equiv_remove, 432
equiv_simple, 433
equiv_status, 433
equiv_struct, 433
eval, 434
example_dt, 434
exec, 435
expose, 435
extract, 436
extract_counter, 438
extract_fa, 438
extract_reduce, 439
extractinv, 439
flatten, 439
flowmap, 440
fmcombine, 441
fminit, 442
formalff, 442
freduce, 443
fsm, 444

fsm_detect, 444
fsm_expand, 445
fsm_export, 445
fsm_extract, 446
fsm_info, 446
fsm_map, 446
fsm_opt, 446
fsm_recode, 446
fst2tb, 447
future, 448
gatemate_foldinv, 448
glift, 448
greenpak4_dffinv, 450
help, 450
hierarchy, 450
hilomap, 452
history, 452
ice40_braminit, 452
ice40_dsp, 453
ice40_opt, 453
ice40_wrapcarry, 453
insbuf, 454
internal_stats, 454
iopadmap, 454
jny, 455
json, 455
keep_hierarchy, 456
lattice_gsr, 456
libcache, 457
license, 457
log, 458
logger, 458
ls, 459
ltp, 459
lut2mux, 460
maccmap, 460
memory, 460
memory_bmux2rom, 460
memory_bram, 461
memory_collect, 463
memory_dff, 463
memory_libmap, 463
memory_map, 464
memory_memx, 464
memory_narrow, 465
memory_nordff, 465
memory_share, 465
memory_unpack, 465
microchip_dffopt, 466
microchip_dsp, 466
miter, 466
mutate, 467
muxcover, 469
muxpack, 469
nlutmap, 470
nx_carry, 470
onehot, 470
opt, 470
opt_clean, 471
opt_demorgan, 471
opt_dff, 472
opt_expr, 472
opt_ffinv, 473
opt_lut, 473
opt_lut_ins, 473
opt_mem, 474
opt_mem_feedback, 474
opt_mem_priority, 474
opt_mem_widen, 475
opt_merge, 475
opt_muxtree, 475
opt_reduce, 475
opt_share, 476
paramap, 476
peepopt, 477
plugin, 477
pmux2shiftx, 478
pmuxtree, 478
portarcs, 478
portlist, 479
prep, 479
printattrs, 480
proc, 481
proc_arst, 481
proc_clean, 482
proc_dff, 482
proc_dlatch, 482
proc_init, 482
proc_memwr, 483
proc_mux, 483
proc_prune, 483
proc_rmdead, 483
proc_rom, 483
qbfsat, 484
ql_bram_merge, 485
ql_bram_types, 485
ql_dsp_io_regs, 485
ql_dsp_macc, 486
ql_dsp_simd, 486
ql_ioff, 486
read, 486
read_aiger, 487
read_blif, 488
read_json, 488
read_liberty, 488
read_rtlil, 489
read_verilog, 490
read_verilog_file_list, 493

read_xaiger2, 493
recover_names, 494
rename, 494
rmports, 495
sat, 495
scatter, 499
scc, 499
scratchpad, 500
script, 500
select, 501
setattr, 505
setenv, 506
setparam, 506
setundef, 506
share, 507
shell, 507
show, 508
shregmap, 510
sim, 511
simplemap, 513
splice, 514
splitcells, 514
splitnets, 515
sta, 515
stat, 515
submod, 516
supercover, 517
synth, 517
synth_achronix, 519
synth_anlogic, 520
synth_coolrunner2, 522
synth_easic, 524
synth_ecp5, 525
synth_efinix, 529
synth_fabulous, 530
synth_gatemate, 534
synth_gowin, 537
synth_greenpak4, 539
synth_ice40, 541
synth_intel, 544
synth_intel_alm, 547
synth_lattice, 549
synth_microchip, 553
synth_nanoxplore, 556
synth_nexus, 559
synth_quicklogic, 562
synth_sf2, 565
synth_xilinx, 567
synthprop, 571
tcl, 571
techmap, 572
tee, 575
test_abcloop, 575
test_autotb, 576
test_cell, 576
test_generic, 578
test_pmgen, 578
torder, 578
trace, 579
tribuf, 579
uniquify, 579
verific, 580
verilog_defaults, 582
verilog_defines, 582
viz, 583
wbflip, 584
wrapcell, 584
wreduce, 585
write_aiger, 585
write_aiger2, 586
write_blif, 586
write_btor, 588
write_cxxrtl, 588
write_edif, 593
write_file, 594
write_firrtl, 594
write_functional_cxx, 594
write_functional_rosette, 595
write_functional_smt2, 595
write_intersynth, 595
write_jny, 595
write_json, 596
write_rtlil, 601
write_simplec, 601
write_smt2, 602
write_smv, 605
write_spice, 605
write_table, 606
write_verilog, 606
write_xaiger, 608
write_xaiger2, 608
xilinx_dffopt, 609
xilinx_dsp, 609
xilinx_srl, 610
xprop, 610
zinit, 611

TAG INDEX

abc (*cmd/abc*), 393
abc9 (*cmd/abc9*), 396
abc9_exe (*cmd/abc9_exe*), 399
abc9_ops (*cmd/abc9_ops*), 401
abc_new (*cmd/abc_new*), 403
abstract (*cmd/abstract*), 404
add (*cmd/add*), 405
aigmap (*cmd/aigmap*), 406
alumacc (*cmd/alumacc*), 406
anlogic_eqn (*cmd/anlogic_eqn*), 406
anlogic_fixcarry (*cmd/anlogic_fixcarry*), 407
assertpmux (*cmd/assertpmux*), 407
async2sync (*cmd/async2sync*), 407
attrmap (*cmd/attrmap*), 407
attrmvcp (*cmd/attrmvcp*), 408
autoname (*cmd/autoname*), 409
blackbox (*cmd/blackbox*), 409
bmuxmap (*cmd/bmuxmap*), 409
booth (*cmd/booth*), 409
box_derive (*cmd/box_derive*), 410
bufnorm (*cmd/bufnorm*), 410
bugpoint (*cmd/bugpoint*), 412
bwmuxmap (*cmd/bwmuxmap*), 413
cd (*cmd/cd*), 413
cellmatch (*cmd/cellmatch*), 414
check (*cmd/check*), 414
chformal (*cmd/chformal*), 415
chparam (*cmd/chparam*), 416
chtype (*cmd/chtype*), 416
clean (*cmd/clean*), 416
clean_zerowidth (*cmd/clean_zerowidth*), 417
clk2fflogic (*cmd/clk2fflogic*), 417
clkbufmap (*cmd/clkbufmap*), 417
clockgate (*cmd/clockgate*), 418
connect (*cmd/connect*), 419
connect_rpc (*cmd/connect_rpc*), 419
connwrappers (*cmd/connwrappers*), 420
coolrunner2_fixup (*cmd/coolrunner2_fixup*), 421
coolrunner2_sop (*cmd/coolrunner2_sop*), 421
copy (*cmd/copy*), 421
cover (*cmd/cover*), 421
cutpoint (*cmd/cutpoint*), 422
debug (*cmd/debug*), 422
delete (*cmd/delete*), 423
deminout (*cmd/deminout*), 423
demuxmap (*cmd/demuxmap*), 423
design (*cmd/design*), 423
dffinit (*cmd/dffinit*), 425
dfflegalize (*cmd/dfflegalize*), 425
dfflibmap (*cmd/dfflibmap*), 426
dffunmap (*cmd/dffunmap*), 427
dft_tag (*cmd/dft_tag*), 427
dump (*cmd/dump*), 428
echo (*cmd/echo*), 428
edgetypes (*cmd/edgetypes*), 428
efinix_fixcarry (*cmd/efinix_fixcarry*), 429
equiv_add (*cmd/equiv_add*), 429
equiv_induct (*cmd/equiv_induct*), 429
equiv_make (*cmd/equiv_make*), 430
equiv_mark (*cmd/equiv_mark*), 430
equiv_miter (*cmd/equiv_miter*), 430
equiv_opt (*cmd/equiv_opt*), 431
equiv_purge (*cmd/equiv_purge*), 432
equiv_remove (*cmd/equiv_remove*), 432
equiv_simple (*cmd/equiv_simple*), 433
equiv_status (*cmd/equiv_status*), 433
equiv_struct (*cmd/equiv_struct*), 433
eval (*cmd/eval*), 434
example_dt (*cmd/example_dt*), 434
exec (*cmd/exec*), 435
expose (*cmd/expose*), 435
extract (*cmd/extract*), 436
extract_counter (*cmd/extract_counter*), 438
extract_fa (*cmd/extract_fa*), 438
extract_reduce (*cmd/extract_reduce*), 439
extractinv (*cmd/extractinv*), 439
flatten (*cmd/flatten*), 439
flowmap (*cmd/flowmap*), 440
fmcombine (*cmd/fmcombine*), 441
fminit (*cmd/fminit*), 442
formalff (*cmd/formalff*), 442
freduce (*cmd/freduce*), 443
fsm (*cmd/fsm*), 444
fsm_detect (*cmd/fsm_detect*), 444

fsm_expand (*cmd/fsm_expand*), 445
fsm_export (*cmd/fsm_export*), 445
fsm_extract (*cmd/fsm_extract*), 446
fsm_info (*cmd/fsm_info*), 446
fsm_map (*cmd/fsm_map*), 446
fsm_opt (*cmd/fsm_opt*), 446
fsm_recode (*cmd/fsm_recode*), 446
fst2tb (*cmd/fst2tb*), 447
future (*cmd/future*), 448
gatemate_foldinv (*cmd/gatemate_foldinv*), 448
glift (*cmd/glift*), 448
greenpak4_dffinv (*cmd/greenpak4_dffinv*), 450
help (*cmd/help*), 450
hierarchy (*cmd/hierarchy*), 450
hilomap (*cmd/hilomap*), 452
history (*cmd/history*), 452
ice40_braminit (*cmd/ice40_braminit*), 452
ice40_dsp (*cmd/ice40_dsp*), 453
ice40_opt (*cmd/ice40_opt*), 453
ice40_wrapcarry (*cmd/ice40_wrapcarry*), 453
insbuf (*cmd/insbuf*), 454
internal_stats (*cmd/internal_stats*), 454
iopadmap (*cmd/iopadmap*), 454
jny (*cmd/jny*), 455
json (*cmd/json*), 455
keep_hierarchy (*cmd/keep_hierarchy*), 456
lattice_gsr (*cmd/lattice_gsr*), 456
libcache (*cmd/libcache*), 457
license (*cmd/license*), 457
log (*cmd/log*), 458
logger (*cmd/logger*), 458
ls (*cmd/ls*), 459
ltp (*cmd/ltp*), 459
lut2mux (*cmd/lut2mux*), 460
maccmap (*cmd/maccmap*), 460
memory (*cmd/memory*), 460
memory_bmux2rom (*cmd/memory_bmux2rom*), 460
memory_bram (*cmd/memory_bram*), 461
memory_collect (*cmd/memory_collect*), 463
memory_dff (*cmd/memory_dff*), 463
memory_libmap (*cmd/memory_libmap*), 463
memory_map (*cmd/memory_map*), 464
memory_memx (*cmd/memory_memx*), 464
memory_narrow (*cmd/memory_narrow*), 465
memory_nordff (*cmd/memory_nordff*), 465
memory_share (*cmd/memory_share*), 465
memory_unpack (*cmd/memory_unpack*), 465
microchip_dffopt (*cmd/microchip_dffopt*), 466
microchip_dsp (*cmd/microchip_dsp*), 466
miter (*cmd/miter*), 466
mutate (*cmd/mutate*), 467
muxcover (*cmd/muxcover*), 469
muxpack (*cmd/muxpack*), 469
nlutmap (*cmd/nlutmap*), 470
nx_carry (*cmd/nx_carry*), 470
onehot (*cmd/onehot*), 470
opt (*cmd/opt*), 470
opt_clean (*cmd/opt_clean*), 471
opt_demorgan (*cmd/opt_demorgan*), 471
opt_dff (*cmd/opt_dff*), 472
opt_expr (*cmd/opt_expr*), 472
opt_ffinv (*cmd/opt_ffinv*), 473
opt_lut (*cmd/opt_lut*), 473
opt_lut_ins (*cmd/opt_lut_ins*), 473
opt_mem (*cmd/opt_mem*), 474
opt_mem_feedback (*cmd/opt_mem_feedback*), 474
opt_mem_priority (*cmd/opt_mem_priority*), 474
opt_mem_widen (*cmd/opt_mem_widen*), 475
opt_merge (*cmd/opt_merge*), 475
opt_muxtree (*cmd/opt_muxtree*), 475
opt_reduce (*cmd/opt_reduce*), 475
opt_share (*cmd/opt_share*), 476
paramap (*cmd/paramap*), 476
peepopt (*cmd/peepopt*), 477
plugin (*cmd/plugin*), 477
pmux2shiftx (*cmd/pmux2shiftx*), 478
pmuxtree (*cmd/pmuxtree*), 478
portarcs (*cmd/portarcs*), 478
portlist (*cmd/portlist*), 479
prep (*cmd/prep*), 479
printattrs (*cmd/printattrs*), 480
proc (*cmd/proc*), 481
proc_arst (*cmd/proc_arst*), 481
proc_clean (*cmd/proc_clean*), 482
proc_dff (*cmd/proc_dff*), 482
proc_dlatch (*cmd/proc_dlatch*), 482
proc_init (*cmd/proc_init*), 482
proc_memwr (*cmd/proc_memwr*), 483
proc_mux (*cmd/proc_mux*), 483
proc_prune (*cmd/proc_prune*), 483
proc_rmdead (*cmd/proc_rmdead*), 483
proc_rom (*cmd/proc_rom*), 483
qbfsat (*cmd/qbfsat*), 484
ql_bram_merge (*cmd/ql_bram_merge*), 485
ql_bram_types (*cmd/ql_bram_types*), 485
ql_dsp_io_regs (*cmd/ql_dsp_io_regs*), 485
ql_dsp_macc (*cmd/ql_dsp_macc*), 486
ql_dsp_simd (*cmd/ql_dsp_simd*), 486
ql_ioff (*cmd/ql_ioff*), 486
read (*cmd/read*), 486
read_aiger (*cmd/read_aiger*), 487
read_blif (*cmd/read_blif*), 488
read_json (*cmd/read_json*), 488
read_liberty (*cmd/read_liberty*), 488
read_rtlil (*cmd/read_rtlil*), 489
read_verilog (*cmd/read_verilog*), 490
read_verilog_file_list (*cmd/read_verilog_file_list*), 493

read_xaiger2 (*cmd/read_xaiger2*), 493
recover_names (*cmd/recover_names*), 494
rename (*cmd/rename*), 494
rmports (*cmd/rmports*), 495
sat (*cmd/sat*), 495
scatter (*cmd/scatter*), 499
scc (*cmd/scc*), 499
scratchpad (*cmd/scratchpad*), 500
script (*cmd/script*), 500
select (*cmd/select*), 501
setattr (*cmd/setattr*), 505
setenv (*cmd/setenv*), 506
setparam (*cmd/setparam*), 506
setundef (*cmd/setundef*), 506
share (*cmd/share*), 507
shell (*cmd/shell*), 507
show (*cmd/show*), 508
shregmap (*cmd/shregmap*), 510
sim (*cmd/sim*), 511
simplemap (*cmd/simplemap*), 513
splice (*cmd/splice*), 514
splitcells (*cmd/splitcells*), 514
splitnets (*cmd/splitnets*), 515
sta (*cmd/sta*), 515
stat (*cmd/stat*), 515
submod (*cmd/submod*), 516
supercover (*cmd/supercover*), 517
synth (*cmd/synth*), 517
synth_achronix (*cmd/synth_achronix*), 519
synth_anlogic (*cmd/synth_anlogic*), 520
synth_coolrunner2 (*cmd/synth_coolrunner2*), 522
synth_easic (*cmd/synth_easic*), 524
synth_ecp5 (*cmd/synth_ecp5*), 525
synth_efinix (*cmd/synth_efinix*), 529
synth_fabulous (*cmd/synth_fabulous*), 530
synth_gatemate (*cmd/synth_gatemate*), 534
synth_gowin (*cmd/synth_gowin*), 537
synth_greenpak4 (*cmd/synth_greenpak4*), 539
synth_ice40 (*cmd/synth_ice40*), 541
synth_intel (*cmd/synth_intel*), 544
synth_intel_alm (*cmd/synth_intel_alm*), 547
synth_lattice (*cmd/synth_lattice*), 549
synth_microchip (*cmd/synth_microchip*), 553
synth_nanoxplore (*cmd/synth_nanoxplore*), 556
synth_nexus (*cmd/synth_nexus*), 559
synth_quicklogic (*cmd/synth_quicklogic*), 562
synth_sf2 (*cmd/synth_sf2*), 565
synth_xilinx (*cmd/synth_xilinx*), 567
synthprop (*cmd/synthprop*), 571
tcl (*cmd/tcl*), 571
techmap (*cmd/techmap*), 572
tee (*cmd/tee*), 575
test_abcloop (*cmd/test_abcloop*), 575
test_autotb (*cmd/test_autotb*), 576
test_cell (*cmd/test_cell*), 576
test_generic (*cmd/test_generic*), 578
test_pmgen (*cmd/test_pmgen*), 578
torder (*cmd/torder*), 578
trace (*cmd/trace*), 579
tribuf (*cmd/tribuf*), 579
uniquify (*cmd/uniquify*), 579
verific (*cmd/verific*), 580
verilog_defaults (*cmd/verilog_defaults*), 582
verilog_defines (*cmd/verilog_defines*), 582
viz (*cmd/viz*), 583
wbflip (*cmd/wbflip*), 584
wrapcell (*cmd/wrapcell*), 584
wreduce (*cmd/wreduce*), 585
write_aiger (*cmd/write_aiger*), 585
write_aiger2 (*cmd/write_aiger2*), 586
write_blif (*cmd/write_blif*), 586
write_btor (*cmd/write_btor*), 588
write_cxxrtl (*cmd/write_cxxrtl*), 588
write_edif (*cmd/write_edif*), 593
write_file (*cmd/write_file*), 594
write_firrtl (*cmd/write_firrtl*), 594
write_functional_cxx (*cmd/write_functional_cxx*), 594
write_functional_rosette (*cmd/write_functional_rosette*), 595
write_functional_smt2 (*cmd/write_functional_smt2*), 595
write_intersynth (*cmd/write_intersynth*), 595
write_jny (*cmd/write_jny*), 595
write_json (*cmd/write_json*), 596
write_rtlil (*cmd/write_rtlil*), 601
write_simplec (*cmd/write_simplec*), 601
write_smt2 (*cmd/write_smt2*), 602
write_smv (*cmd/write_smv*), 605
write_spice (*cmd/write_spice*), 605
write_table (*cmd/write_table*), 606
write_verilog (*cmd/write_verilog*), 606
write_xaiger (*cmd/write_xaiger*), 608
write_xaiger2 (*cmd/write_xaiger2*), 608
xilinx_dffopt (*cmd/xilinx_dffopt*), 609
xilinx_dsp (*cmd/xilinx_dsp*), 609
xilinx_srl (*cmd/xilinx_srl*), 610
xprop (*cmd/xprop*), 610
zinit (*cmd/zinit*), 611